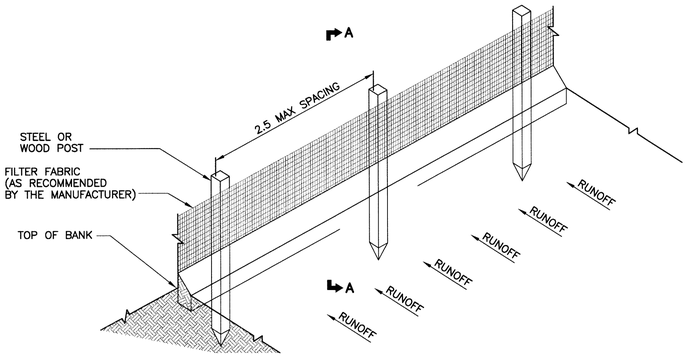

ISOMETRIC DETAIL
SCALE: N.T.S.

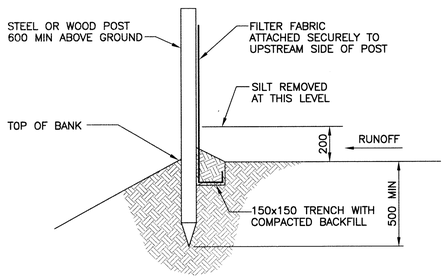

SECTION A–A
SCALE: N.T.S.

SILT FENCE DETAILS

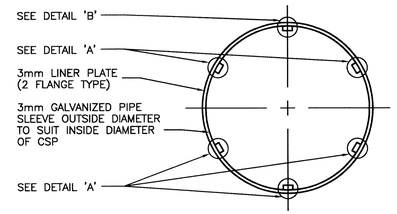

ELEVATION

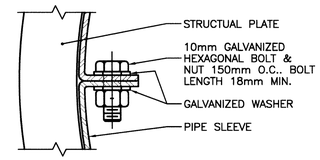

DETAIL 'A'

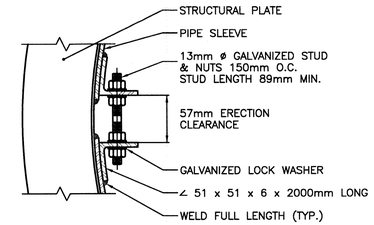

DETAIL 'B'

INTERNAL SLIP JOINT DETAILS
SCALE: N.T.S.

APEGM
Certificate of Authorization
KGS Group
No. 245 Date: Dec 10 2010

LOCATION APPROVED
UNDERGROUND STRUCTURES

SUPV. U/G STRUCTURES COMMITTEE DATE

NOTE:
LOCATION OF UNDERGROUND STRUCTURES AS SHOWN ARE BASED ON THE BEST INFORMATION AVAILABLE BUT NO GUARANTEE IS GIVEN THAT ALL EXISTING UTILITIES ARE SHOWN OR THAT THE GIVEN LOCATIONS ARE EXACT. CONFIRMATION OF EXISTENCE AND EXACT LOCATION OF ALL SERVICES MUST BE OBTAINED FROM THE INDIVIDUAL UTILITIES BEFORE PROCEEDING WITH CONSTRUCTION.

B.M. –
ELEV. –

NO.	REVISIONS	DATE	BY
1	RE-ISSUED FOR TENDER	10/12/10	RBO
0	ISSUED FOR TENDER	10/12/06	RBO

KGS GROUP
CONSULTING ENGINEERS

DESIGNED BY	RBO	CHECKED BY	RJH
DRAWN BY	DMW	APPROVED BY	
SCALE:	AS NOTED	RELEASED FOR CONSTRUCTION:	
DATE	09/11/25	DATE	

ENGINEER'S SEAL
PROVINCE OF MANITOBA
R.B. OFFMAN
Member
24701
REGISTERED PROFESSIONAL ENGINEER

CONSULTANT DRAWING NO.
10–0107–18_06

Winnipeg
THE CITY OF WINNIPEG
WATER AND WASTE DEPARTMENT

PROJECT TITLE
2010 OUTFALL REPAIRS

MISCELLANEOUS DETAILS

SHEET 05 OF 05
COMPUTER FILE NAME 10–0107–18
CITY DRAWING NUMBER LD–5586

P:\Projects\2010\10-0107-18\Doc.Control\ToBeIssued\DWG\908-2010_Drawings_LD-5586-R1.dwg – Tab: LD-5586 Plotted By: DDeroche 12/10/2010 [Fri 1:49pm]
CGWLEGEND