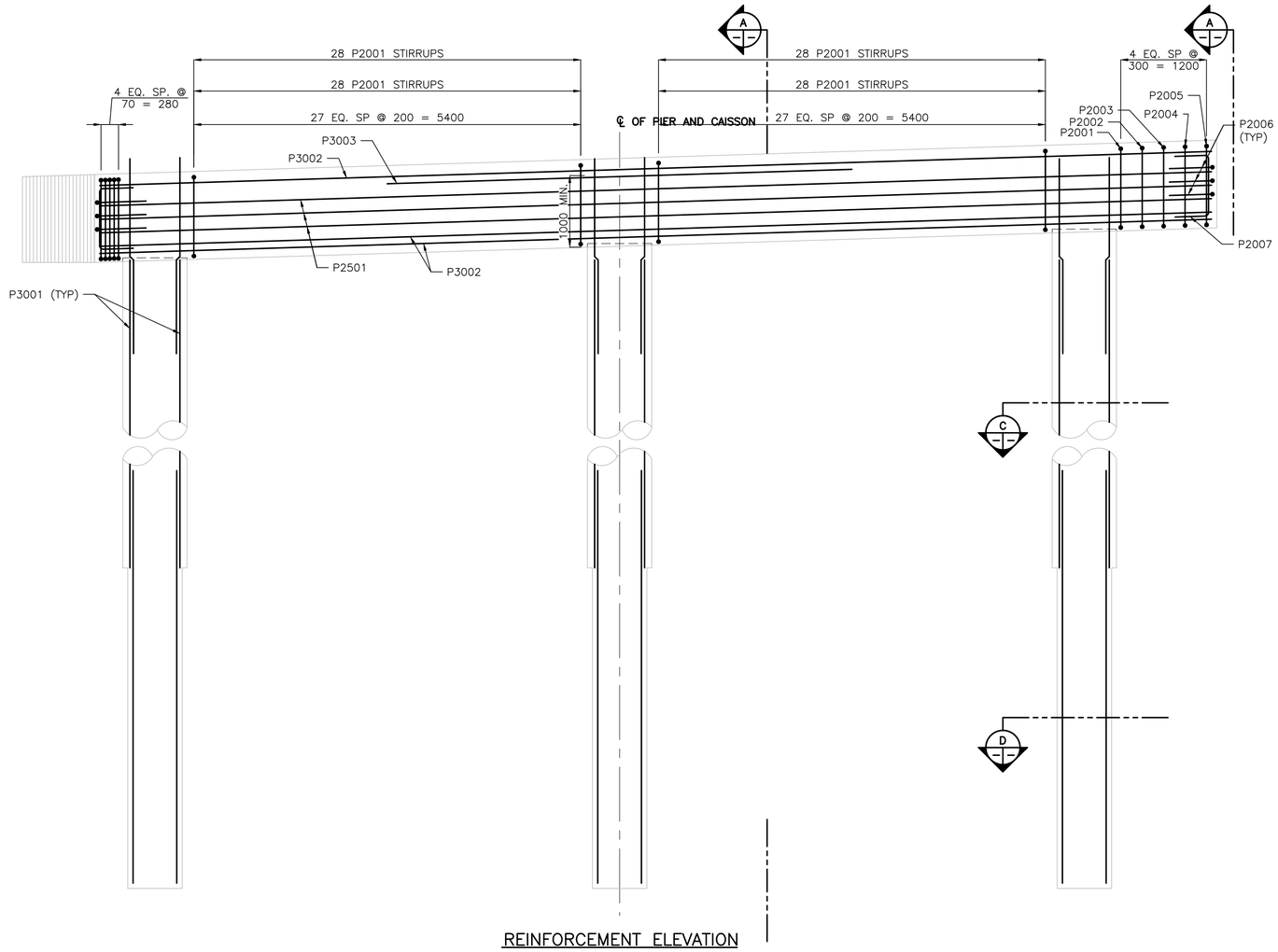

REINFORCEMENT ELEVATION
1:40

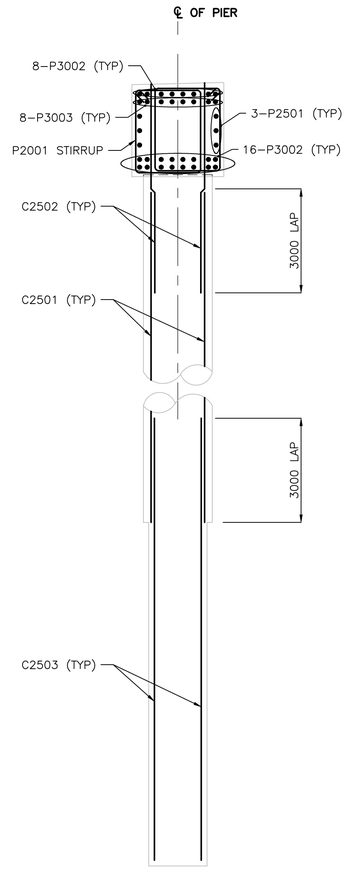

SECTION A
1:40

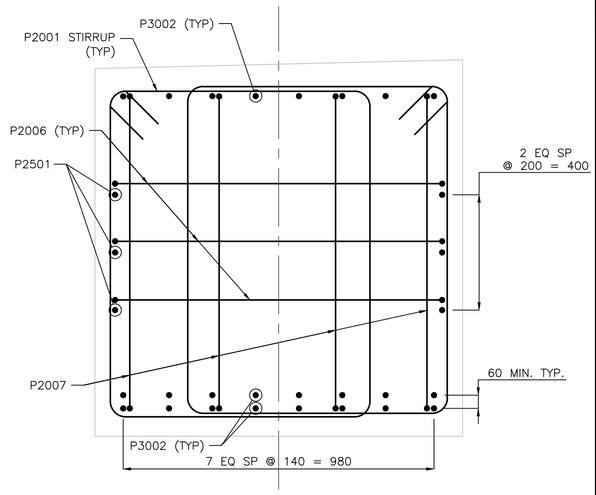

SECTION B
1:10

NOTE:
1. SEE SHEETS 12 AND 14 FOR BORE HOLE INFORMATION
2. SEE SHEETS 12 AND 13 FOR CAISSON LAYOUT AND CUT–OFF INFORMATION

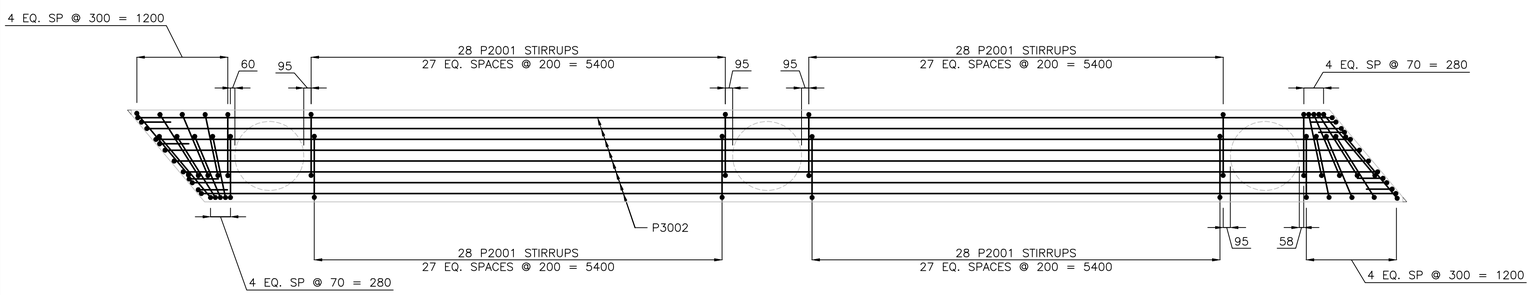

REINFORCEMENT PLAN
1:40

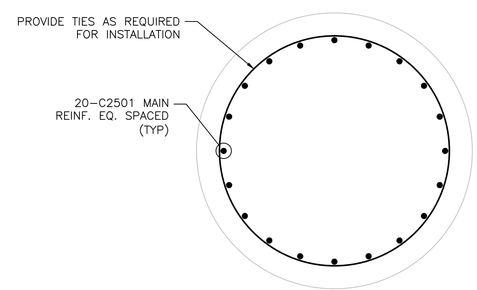

SECTION C
1:10

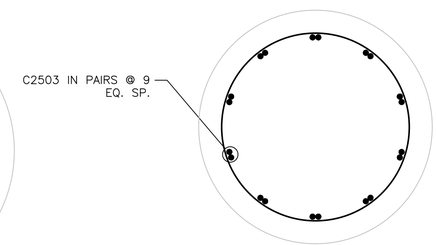

SECTION D
1:10

APEGM
Certificate of Authorization
Stantec Consulting Ltd.
No. 1301 Date:_____

METRIC
WHOLE NUMBERS INDICATE MILLIMETRES
DECIMALIZED NUMBERS INDICATE METRES

LOCATION APPROVED
UNDERGROUND STRUCTURES

SUPV. U/G STRUCTURES COMMITTEE DATE

NOTE:
LOCATION OF UNDERGROUND STRUCTURES AS SHOWN ARE BASED ON THE BEST INFORMATION AVAILABLE BUT NO GUARANTEE IS GIVEN THAT ALL EXISTING UTILITIES ARE SHOWN OR THAT THE GIVEN LOCATIONS ARE EXACT. CONFIRMATION OF EXISTENCE AND EXACT LOCATION OF ALL SERVICES MUST BE OBTAINED FROM THE INDIVIDUAL UTILITIES BEFORE PROCEEDING WITH CONSTRUCTION.

B.M.
ELEV.

NO.	REVISIONS	DATE	BY
0	ISSUED FOR TENDER	11.12.15	K.S.A.

Stantec
Stantec Consulting Ltd.
100–1355 Taylor Ave., Winnipeg, Manitoba
Tel 204–928–8840 Fax 204–284–4795

DESIGNED BY	K.S.A.	CHECKED BY	K.S.A.
DRAWN BY	J.M.B.	APPROVED BY	B.J.W.
HOR. SCALE:	1:10	RELEASED FOR CONSTRUCTION:	
VERTICAL:	U.N.O.		
DATE	DEC. 15, 2011	DATE	

ENGINEER'S SEAL

CONSULTANT DRAWING NO.
S-304

Winnipeg
THE CITY OF WINNIPEG
PUBLIC WORKS DEPARTMENT
ENGINEERING DIVISION

STURGEON ROAD
BRIDGE REPLACEMENT
PORTAGE AVENUE TO HALLONQUIST DRIVE
REINFORCING DETAILS
NORTHBOUND PIERS SU.2 & SU.3

SHEET 29 OF 82
CAD FILE DRAWING NUMBER 31590s-301-767.dwg
CITY DRAWING NUMBER B120-12-029

V:\1137\active\113731590\drawing\402_design\sheet_files\2011-11-12_tender_issue\31590s-301-767.dwg
Date: 2011 Dec 20 3:16pm Login: Beernaerts, James