BILL OF REINFORCING STEEL

STRAIGHT BARS

MARK	QTY.	LENGTH (mm)	MASS (kg)	MARK	QTY.	LENGTH (mm)	MASS (kg)
D1501S	296	15530	7217.1	D1540S	4	960	6.0
D1502S	98	16000	2461.8	D1541S	12	2300	43.3
D1503S	196	8000	2461.8	D1542S	12	2060	38.8
D1504S	196	14500	4461.9	D1543S	4	2620	16.5
D1505S	74	14880	1728.8	D1544S	4	2380	14.9
D1506S	376	2150	1269.2	D1545S	4	1045	6.6
D1507S	128	15100	3034.5	D1546S	4	1285	8.1
D1508S	1	2055	3.2	D1547S	4	300	1.9
D1509S	2	1850	5.8	D1548S	4	540	3.4
D1510S	1	1520	2.4	D1549S	4	3550	22.3
D1511S	1	1160	1.8	D1550S	4	3310	20.8
D1512S	1	805	1.3	D1551S	4	515	3.2
D1513S	1	445	0.7	D1552S	4	2930	18.4
D1514S	1	1790	2.8	D1553S	4	3170	19.9
D1515S	1	1435	2.3	D1554S	200	550	172.7
D1516S	1	1075	1.7	D1555S	68	1870	199.6
D1517S	5	720	5.7	D1578S	1	3570	5.6
D1518S	5	755	5.9	D1579S	1	4570	7.2
D1519S	1	1115	1.8	D1580S	1	1500	4.7
D1520S	1	1470	2.3	D1581S	4	1140	7.2
D1521S	1	1830	2.9	D1582S	4	900	5.7
D1522S	1	480	0.8	D1583S	4	1025	6.4
D1523S	1	835	1.3	D1584S	4	1265	7.9
D1524S	1	1195	1.9				
D1525S	1	1530	2.4	D2501S	196	6000	4615.8
D1526S	34	1880	100.4	D2502	308	6370	7700.7
D1527S	1	2090	3.3				
D1528S	156	4340	1063.0				
D1529S	116	14880	2709.9				
D1530S	184	6370	1840.2				
D1531S	8	1675	21.0				
D1532S	4	2460	15.4				
D1533S	2	765	2.4				
D1534S	1	2310	3.6				
D1535S	592	2880	2676.8				
D1536S	4	170	1.1				
D1537S	4	405	2.5				
D1538S	4	490	3.1				
D1539S	4	730	4.6				

BENT BARS

MARK	QTY.	TYPE	A	B	C	D	E	LENGTH (mm)	MASS (kg)
D1556S	921	F	172	763	767	252		1954	2825.4
D1557S	196	G	270	270	850	850		2240	689.3
D1558S	94	L	600	555	465	195		1815	267.9
D1559S	94	L	600	555	435	170		1760	259.7
D1560	156	E	1050	550	500	775		2875	704.1
D1561	312	C	500	150	150			800	391.9
D1562S	714	K	300	268	275	205		1048	1174.8
D1563S	336	C	246	300	300			846	446.3
D1564S	336	C	215	300	300			815	429.9
D1565S	384	C	180	500	500			1180	711.4
D1566S	18	C	180	360	360			900	25.4
D1567S	94	C	170	975	975			2120	312.9
D1568S	94	C	215	975	975			2165	319.5
D1569S	188	H	700	485	150			1335	394.0
D1570S	188	J	700	675	150			1525	450.1
D1571S	16	B	650	650				1300	32.7
D1572S	18	A	1350	215				1565	44.2
D1573S	8	D	360	275	715			1350	17.0
D1574S	2	D	360	275	645			1280	4.0
D1575S	2	D	360	275	485			1120	3.5
D1576S	2	D	360	275	325			960	3.0
D1577S	2	D	360	275	160			795	2.5

TOTAL MASS OF BLACK STEEL REINFORCING	41026.9 kg
TOTAL MASS OF STAINLESS STEEL REINFORCING	12569.6 kg

BAR TYPES

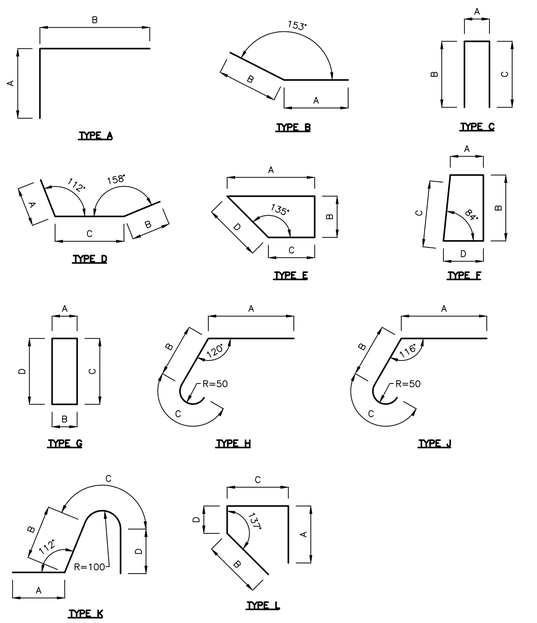

APEGM
Certificate of Authorization
Stantec Consulting Ltd.
No. 1301 Date:_____

METRIC
WHOLE NUMBERS INDICATE MILLIMETRES
DECIMALIZED NUMBERS INDICATE METRES

LOCATION APPROVED
UNDERGROUND STRUCTURES

SUPV. U/G STRUCTURES COMMITTEE DATE

NOTE:
LOCATION OF UNDERGROUND STRUCTURES AS SHOWN ARE BASED ON THE BEST INFORMATION AVAILABLE BUT NO GUARANTEE IS GIVEN THAT ALL EXISTING UTILITIES ARE SHOWN OR THAT THE GIVEN LOCATIONS ARE EXACT. CONFIRMATION OF EXISTENCE AND EXACT LOCATION OF ALL SERVICES MUST BE OBTAINED FROM THE INDIVIDUAL UTILITIES BEFORE PROCEEDING WITH CONSTRUCTION.

B.M.
ELEV.

NO.	REVISIONS	DATE	BY
0	ISSUED FOR TENDER	11.12.15	K.S.A.

Stantec
Stantec Consulting Ltd.
905 Waverley Street, Winnipeg, Manitoba
Tel 204-489-5900 Fax 204-453-9012

DESIGNED BY	K.S.A.	CHECKED BY	K.S.A.
DRAWN BY	J.M.B.	APPROVED BY	B.J.W.
HOR. SCALE: VERTICAL:	N/A	RELEASED FOR CONSTRUCTION:	
DATE	DEC. 15, 2011	DATE	

ENGINEER'S SEAL

CONSULTANT DRAWING NO.
S-609

Winnipeg
THE CITY OF WINNIPEG
PUBLIC WORKS DEPARTMENT
ENGINEERING DIVISION

STURGEON ROAD
BRIDGE REPLACEMENT
PORTAGE AVENUE TO HALLONQUIST DRIVE
REINFORCING SCHEDULES
DECK, APPROACH & REINFORCED ROAD SLAB

SHEET 47 OF 82
CAD FILE DRAWING NUMBER 31590s-605-767.dwg
CITY DRAWING NUMBER B120-12-047

V:\1137\active\113731590\drawing\402_design\sheet_files\2011-11-12_tender_issue\31590s-605-767.dwg
Date: 2011 Dec 20 4:09pm Login: Beernaerts, James