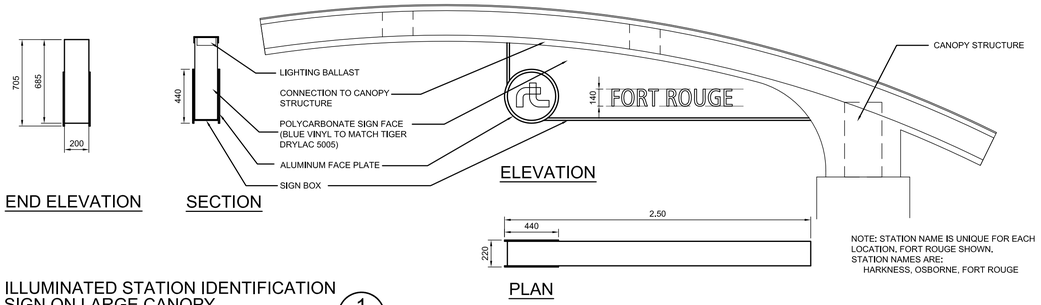

ILLUMINATED STATION IDENTIFICATION SIGN ON LARGE CANOPY (1 - 21)

N.T.S.

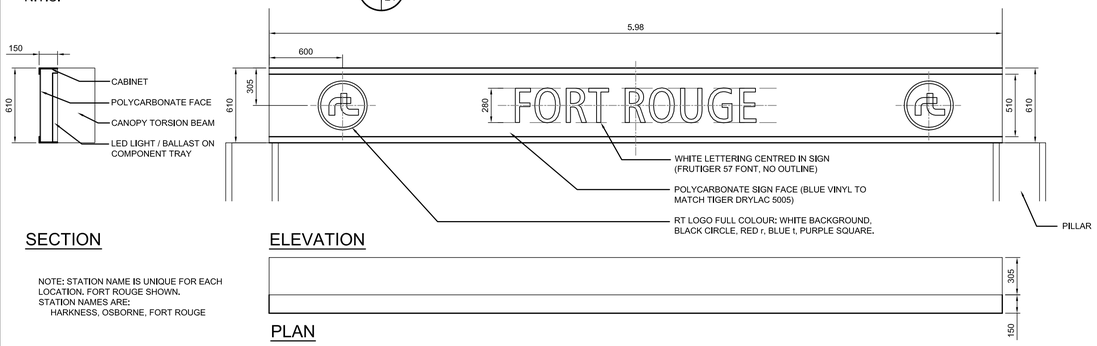

ILLUMINATED SIGN BETWEEN PILLARS ON LARGE CANOPY (2 - 21)

N.T.S.

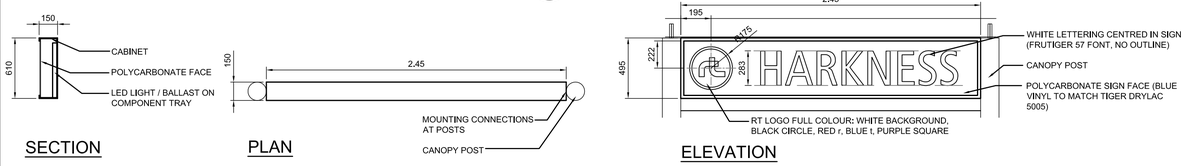

ILLUMINATED SIGN ON NORTHBOUND HARKNESS CANOPY (3 - 12 21)

N.T.S.

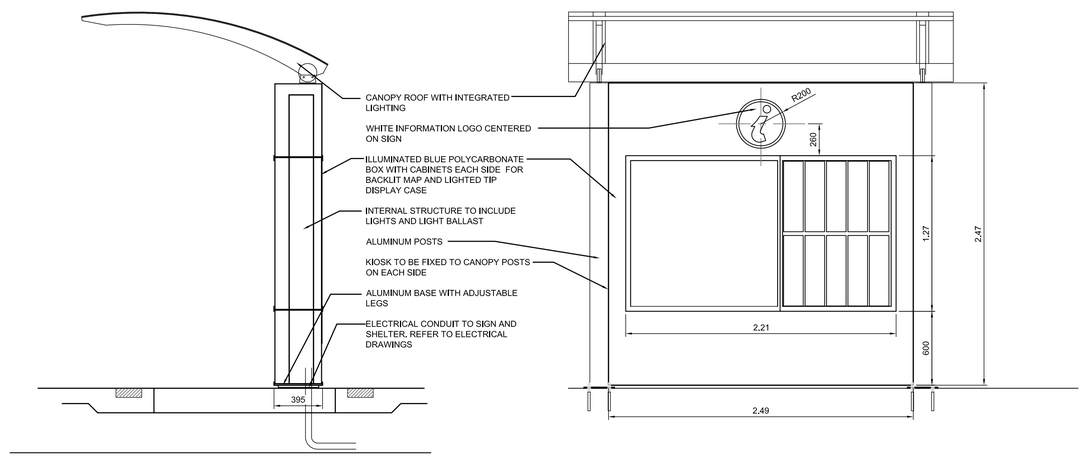

INFORMATION KIOSK AT FORT ROUGE STATION (5 - 14 21)

N.T.S.

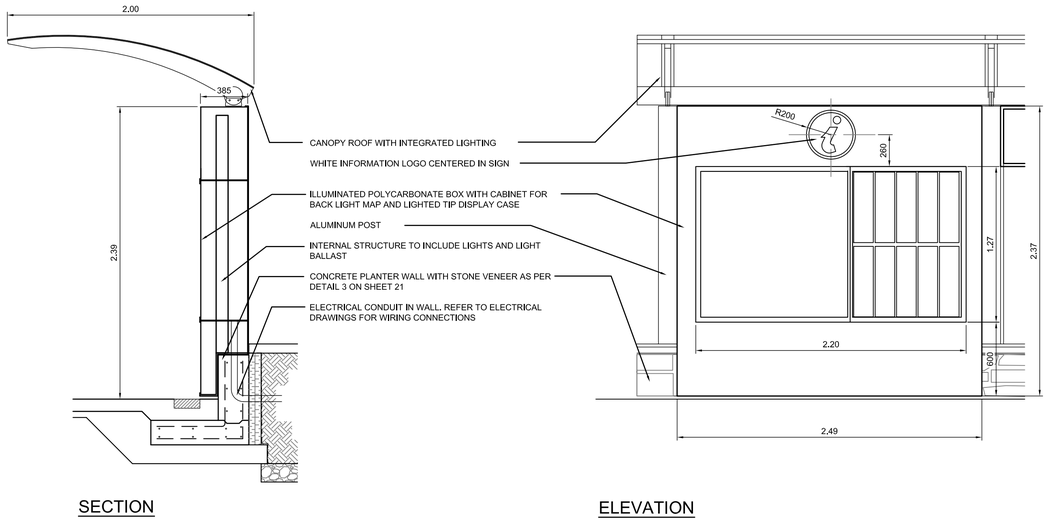

INFORMATION KIOSK AT SOUTHBOUND HARKNESS STATION (4 - 12 21)

N.T.S.

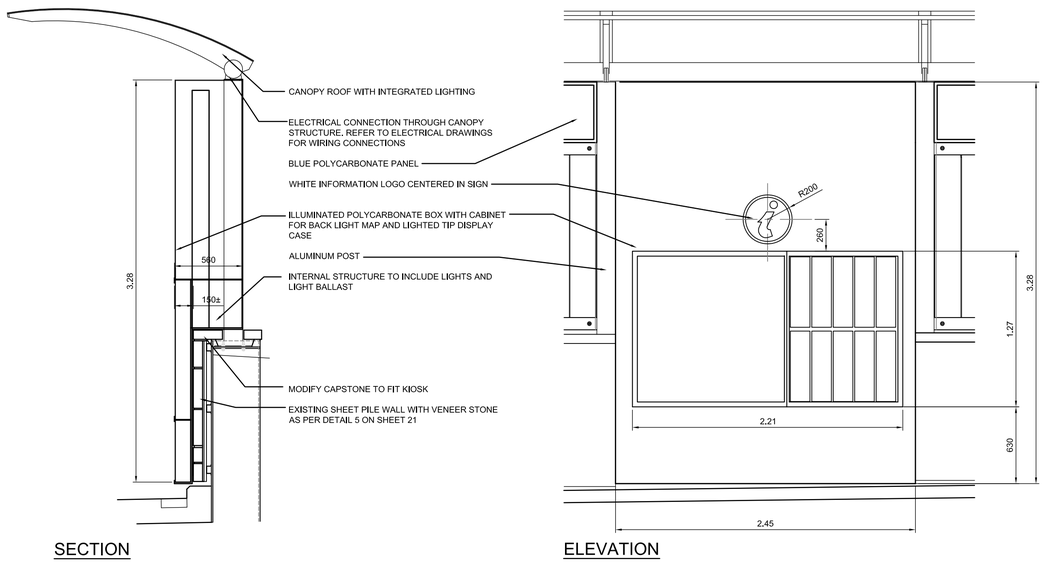

INFORMATION KIOSK AT NORTHBOUND HARKNESS STATION (6 - 12 21)

N.T.S.

REFER TO ELECTRICAL DRAWINGS FOR ALL WIRING CONNECTIONS TO ALL SIGNS, CANOPIES AND STRUCTURES.

ALL DIMENSIONS PROVIDED FOR INFORMATION ON DESIGN EXTENT.

CONTRACTOR TO SUPPLY SHOP DRAWINGS STAMPED BY A STRUCTURAL ENGINEER LICENSED TO PRACTICE IN THE PROVINCE OF MANITOBA. SHOP DRAWINGS TO INCLUDE WALL THICKNESSES, MATERIALS, ETC. AS LISTED IN THE SPECIFICATIONS

LOCATION UNDERGROUND STRUCTURES APPROVED

SUPV. U/G STRUCTURES COMMITTEE — DATE

NOTE:
LOCATION OF UNDERGROUND STRUCTURES AS SHOWN ARE BASED ON THE BEST INFORMATION AVAILABLE, BUT NO GUARANTEE IS GIVEN THAT ALL EXISTING UTILITIES ARE SHOWN OR THAT THE GIVEN LOCATIONS ARE EXACT. CONFIRMATION OF EXISTENCE AND EXACT LOCATION OF ALL SERVICES MUST BE OBTAINED FROM THE INDIVIDUAL UTILITIES BEFORE PROCEEDING WITH CONSTRUCTION.

B.M. BM
ELEV. ELEV

NO.	REVISIONS	DATE	BY
1	ISSUED FOR TENDER	20/04/11	JW

DESIGNED BY SR/JW
DRAWN BY PB
CHECKED BY JW/SR
APPROVED BY -
HOR. SCALE -
VERTICAL
DATE 2011-04-20

McGOWAN·RUSSELL
DILLON CONSULTING

RELEASED FOR CONSTRUCTION
ORIGINAL SIGNED BY
RANDY FINGAS
DATE: APRIL 20,2011

LANDSCAPE ARCHITECT'S SEAL
the manitoba association of landscape architects
JACQUELINE L. WILKIE
member no. 75
APRIL 20,2011

CONSULTANT PROJECT NO.
08-028

Winnipeg
THE CITY OF WINNIPEG
TRANSIT DEPARTMENT

SOUTHWEST RAPID TRANSIT CORRIDOR - STAGE 1
STATION CONSTRUCTION, WARSAW RECONSTRUCTION, & ASSOCIATED WORKS

CANOPY MOUNTED SIGNAGE

CITY DRAWING NUMBER P-3325 - 21
SHEET 21 OF 28
CONSULTANT DRAWING NUMBER C7-L-5010-T

X:\08-028 Southwestern BRT Corridor\dwg\2010\Contract 7\TENDER SET\signage 2011-04-11.dwg