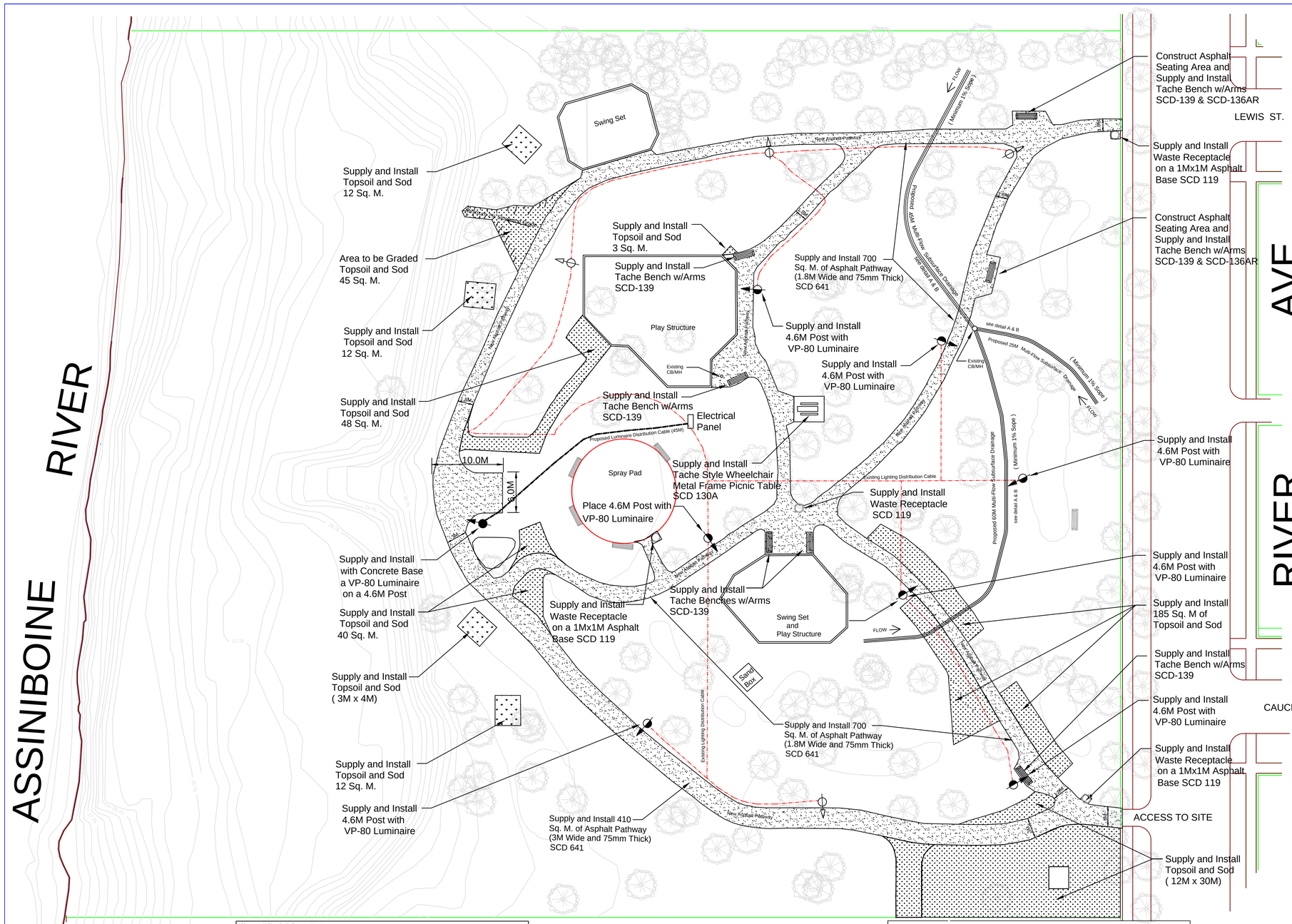

SUMMARY OF ELECTRICAL WORK

1. PATHWAY LIGHTING IS TO BE INSTALLED FOR FORT ROUGE PARK. THE LIGHTING WILL CONSIST OF 7 x 100W HPS POST TOP LUMINAIRES REPLACEMENTS INSTALLED ADJACENT TO THE PATHWAY. IN ADDITION 1 NEW 100W HPS POST TOP LUMINAIRE AND CONCRETE BASE WILL BE INSTALLED AT THE NORTH END OF THE PARK. ALL LIGHTING TO BE CONTROLLED VIA AN OUTDOOR DISTRIBUTION CABINET CW PHOTOCELL.

2. The 7 REPLACEMENT POST TOP LUMINARIES AS WELL AS THE NEW ONE TO BE VANDAL-RESISTANT SDL LIGHTING: VP 80 - LR2-100S -120/240-H11-PC/8G.THESE LUMINAIRES TO BE MOUNTED ON 4.6M STEEL POLES.

3. THE CONTRACTOR MUST CARRY ALL COSTS ASSOCIATED WITH THE REWMOVAL OF ALL EXISTING LIGHTS AND POLES

4. ALL LUMINAIRE LOCATIONS TO BE CONFIRMED BY CONTRACT ADMINISTRATOR (TONNI BUUS 986-3781 OR CELL 803-3351) PRIOR TO COMMENCING WORK.

5. THE CONTRACTOR SHALL INFORM THE CONTRACT ADMINISTRATOR AT LEAST FIVE DAYS IN ADVANCE OF POURING THE BASE TO ALLOW THE CONTRACT ADMINISTRATOR TO VERIFY LOCATION AND WITNESS THE PROCESSE. THE CONTRACTOR TO ALSO INFORM THE CONTRACT ADMINISTRATOR AT LEAST FIVE DAYS IN ADVANCE OF THE TRENCHING TO ALLOW THE CONTRACT ADMINISTRATOR TO WITNESS THE PROCESS.

TRENCHING

CONTRACTOR TO PROVIDE TRENCHING REQUIRED TO POWER ALL LUMINAIRES. DEPTH TO BE MINIMUM 600mm AS PER ELECTRICAL CODE. WIRING TO BE DIRECT-BURY RWU. PROVIDE MINIMUM 150mm SAND ABOVE AND BELOW WIRING. MAINTAIN ACCURATE LOCATIONS OF TRENCHING FOR INCLUSION ON AS-BUILT DRAWINGS.
CONTRACTOR TO COORDINATE TRENCHING WITH CONTRACT ADMINISTRATOR AND OTHER ON SITE CONTRACTORS COMPLETING LANDSCAPE WORK.
CONTRACTOR TO PROVIDE SOIL COMPACTION TO 95% PROCTOR DENSITY. RE-SOD AS REQUIRED IN ACCORDANCE WITH THE CITY OF WINNIPEG STANDARD CONSTRUCTION SPECIFICATIONS CW 3510 TO RETURN AREA TO ORIGINAL CONDITION.

GENERAL

1. THE ELECTRICAL SYSTEM SHALL COMPLY WITH THE REQUIREMENTS OF THE LATEST EDITION OF THE CANADIAN ELECTRICAL CODE (CEC) AND WITH ALL PROVINCIAL AND MUNICIPAL LAWS, RULES AND ORDINANCES.
2. THE CONTRACTOR SHALL PROVIDE ALL MATERIALS, LABOUR AND EQUIPMENT NECESSARY FOR INSTALLING, TESTING AND PLACING IN INITIAL OPERATION THE COMPLETE ELECTRICAL SYSTEM.
3. EXAMINE ALL PLANS AND SPECIFICATIONS PERTAINING TO THIS CONTRACT. NOTIFY CONTRACT ADMINISTRATOR OF ERRORS OR OMISSIONS BEFORE SUBMITTING THE PRICE. FAILING SUCH NOTIFICATION, THIS CONTRACTOR SHALL MEET ALL SUCH REQUIREMENTS WITHOUT EXTRA COST TO THE CITY.
4. THE CONTRACTOR SHALL OBTAIN ALL NECESSARY PERMITS, PAY ALL NECESSARY FEES AND GIVE ALL NECESSARY NOTICES.
5. ALL WORK COMPLETED SHALL BE ACCOMPLISHED IN A FIRST CLASS & WORKMAN LIKE STYLE
6. ALL EQUIPMENT SUPPLIED UNDER THIS CONTRACT SHALL BE NEW AND SHALL BE CSA AND LOCALLY APPROVED.
7. ALL WORK SHALL BE LAID OUT IN ITS MECHANICAL APPEARANCE. IT SHALL BE LOGICALLY ARRANGED FOR SIMPLICITY OF ACCESSIBILITY AND ELECTRICAL EFFICIENCY.
8. THE CONTRACTOR SHALL PROVIDE LAMACOID NAMEPLATES FOR ALL ELECTRICAL DISTRIBUTION EQUIPMENT/DEVICES AND SHALL MOUNT THE NAME PLATES ON ALL EQUIPMENT TO INDICATE FUNCTION, VOLTAGE AND POWER OF DEVICES.
9. THIS SPECIFICATION IS NOT INTENDED TO RESTATE THE APPLICABLE CODES. THE CONTRACTOR WILL BE RESPONSIBLE FOR PROVIDING ALL GROUNDING, ETC. AND FOLLOWING ALL WIRING METHODS.
10. THE CONTRACTOR SHALL EXAMINE THE CONDITIONS OF THE SITE AND SHALL BE RESPONSIBLE FOR ALL EQUIPMENT, MATERIAL, AND LABOUR NECESSARY FOR THE WORK REQUIRED FOR THIS PROJECT.
11. PRIOR TO SCHEDULING FINAL INSPECTION THE CONTRACTOR SHALL ENSURE THAT ALL WORK IS COMPLETED AND IN PARTICULAR THAT OPERATION AND MAINTENANCE MANUALS ARE COMPLETED, ALL NAMEPLATES INSTALLED, VERIFICATION TESTS HAVE BEEN DONE AND CERTIFICATES HAVE BEEN RECEIVED THAT INDICATE WORK INSTALLED CONFORMS TO ALL REQUIREMENTS.
12. ALL TREES WITHIN THE CONSTRUCTION AREA MUST BE PROTECTED FOR THE DURATION OF THE CONSTRUCTION PERIOD IN ACCORDANCE WITH SECTION 3.19(CW 1130 SITE REQUIREMENTS) CITY OF WINNIPEG STANDARD CONSTRUCTION SPECIFICATIONS.

DELIVERABLES

1. THE CONTRACTOR SHALL MAINTAIN ONE SET OF PLANS AT JOB SITE WHICH HE SHALL CLEARLY NOTE ALL CHANGES OR DEVIATIONS FROM THE CONTRACT DOCUMENT AS THE JOB PROGRESSES. THE CONTRACTOR SHALL SUBMIT THREE SETS OF AS-BUILT DRAWINGS TO THE CONTRACT ADMINISTRATOR ON COMPLETION OF THE JOB.

LAYOUT

3. THE CONTRACTOR SHALL LAYOUT ALL WORK ESTABLISHING ALL LINES, LEVELS AND CENTRES AND SHALL ASSUME RESPONSIBILITY FOR ANY ERRORS RESULTING FROM FAILURE TO USE ADEQUATE CAUTION.

POLES

1. POLES TO BE 4.6 METERS (15') (7 REPLACEMENT AND 1 NEW LUMINAIRES), STEEL, AND TO BE PRIMED AND H11 TEXTURED BLACK.
2. BASE
3. TO BE POURED CONCRETE AS PER DETAIL C.

LIGHTING

1. POST TOP LUMINAIRES SHALL MEET THE FOLLOWING CRITERIA:
   - (A) CSA APPROVED OR ULC LISTED
   - (B) SUITABLE FOR WET LOCATION
   - (C) HEAVY-DUTY SPUN ALUMINUM HOUSING
   - (D) CORROSION RESISTANT HARDWARE
   - (E) HEAT AND SHOCK RESISTANT POLYCARBONATE LENS
   - (F) LAMP SHALL BE 100W HPS
   - (G) APPROVED POST TOP LUMINAIRE:
     - (I) VP80 LR2 100S 120/240 A11 PC 8G SDL LIGHTING SYSTEMS
     - (II) OR APPROVED EQUAL.

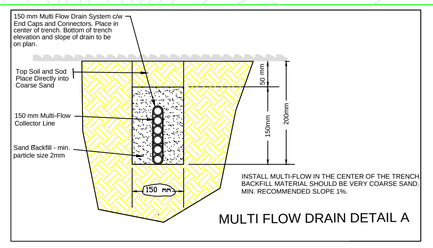

MULTI FLOW DRAIN DETAIL A

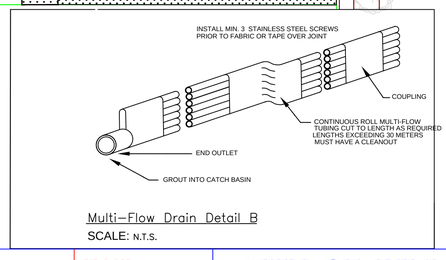

Multi-Flow Drain Detail B

SCALE: N.T.S.

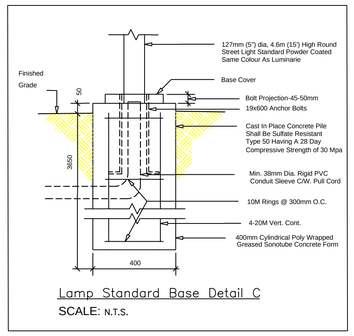

Lamp Standard Base Detail C

SCALE: N.T.S.

0.0 5.0 10.0 15.0 20.0 25.0

METRIC

WHOLE NUMBERS INDICATE MILLIMETRES
DECIMALIZED NUMBERS INDICATE METRES

WARNING

IF POWER EQUIPMENT OR EXPLOSIVES ARE TO BE USED FOR EXCAVATION ON THIS PROJECT THE CONTRACTOR MUST:
1) NOTIFY THE GAS COMPANY OF THE PROPOSED LOCATION OF EXCAVATION.
2) TAKE PRECAUTION TO AVOID DAMAGE TO GAS COMPANY INSTALLATIONS.

SEE PROVINCIAL REGULATION 210/72 FOR DETAILS

EXISTING	LEGEND-PLAN	PROPOSED	EXISTING	LEGEND-PLAN	PROPOSED	EXISTING	LEGEND-PROFILE	PROPOSED
200 WM	WATERMAIN	200 WM		SL , HYDRO		150 WM	WATERMAIN	150 WM
	HYDRANT			MTS			HYDRANT	
	VALVE			TRAFFIC SIGNALS			VALVE	
525 LDS	LAND DRAINAGE SEWER	525 LDS	50 GAS	GAS	50 GAS	300 LDS	LAND DRAINAGE SEWER	300 LDS
375 WWS	WASTEWATER SEWER	375 WWS		SURVEY BAR		250 WWS	WASTEWATER SEWER	250 WWS
	MANHOLE		POLE TOP LUMINARES				TOP OF ASPHALT	00.000
	CATCH BASIN			EXIST.POLE TOP LUMINARES			TOP OF LIMESTONE BASE	00.000
	CURB INLET			PROP. POLE & LUMINARE				
	REDUCER			PROP. BASE, POLE & LUMINARE				
	COUPLER			BURIED LIGHT CABLE				
	ANODE			TREE				

LOCATION APPROVED
UNDERGROUND STRUCTURES

SUPV. U/G STRUCTURES COMMITTEE — DATE

NOTE:
LOCATION OF UNDERGROUND STRUCTURES AS SHOWN ARE BASED ON THE BEST INFORMATION AVAILABLE BUT NO GUARANTEE IS GIVEN THAT ALL EXISTING UTILITIES ARE SHOWN OR THAT THE GIVEN LOCATIONS ARE EXACT. CONFIRMATION OF EXISTENCE AND EXACT LOCATION OF ALL SERVICES MUST BE OBTAINED FROM THE INDIVIDUAL UTILITIES BEFORE PROCEEDING WITH CONSTRUCTION.

B.M. ELEV.
FIELD BOOK #:
POSTED TO LBIS

NO.	REVISIONS	DATE	BY

CITY OF WINNIPEG
PARKS WATERWAYS AND COMMUNITY INITIATIVES

DESIGNED BY TB	CHECKED BY RZ
DRAWN BY TB	APPROVED BY RZ
HOR. SCALE 1:300	RELEASED FOR CONSTRUCTION
VERTICAL	
DATE JUNE 20,2011	DATE JUNE 20,2010

LANDSCAPE ARCHITECT'S/ ENGINEER'S SEAL

BID OPPORTUNITY
FILENAME :
PLOT DATE:

Winnipeg

THE CITY OF WINNIPEG
Planning, Property and Development Depart.
Parks Waterways and Community Initiatives
Unit 15-30 Fort Street

FORT ROUGE PARK
PATHWAY, LIGHTING AND
SITE IMPROVEMENTS

SHEET 2 OF 3
CITY DRAWING NUMBER
F.5-F