A1 SIZE 23.4" x 33.1" (594mm x 841mm)

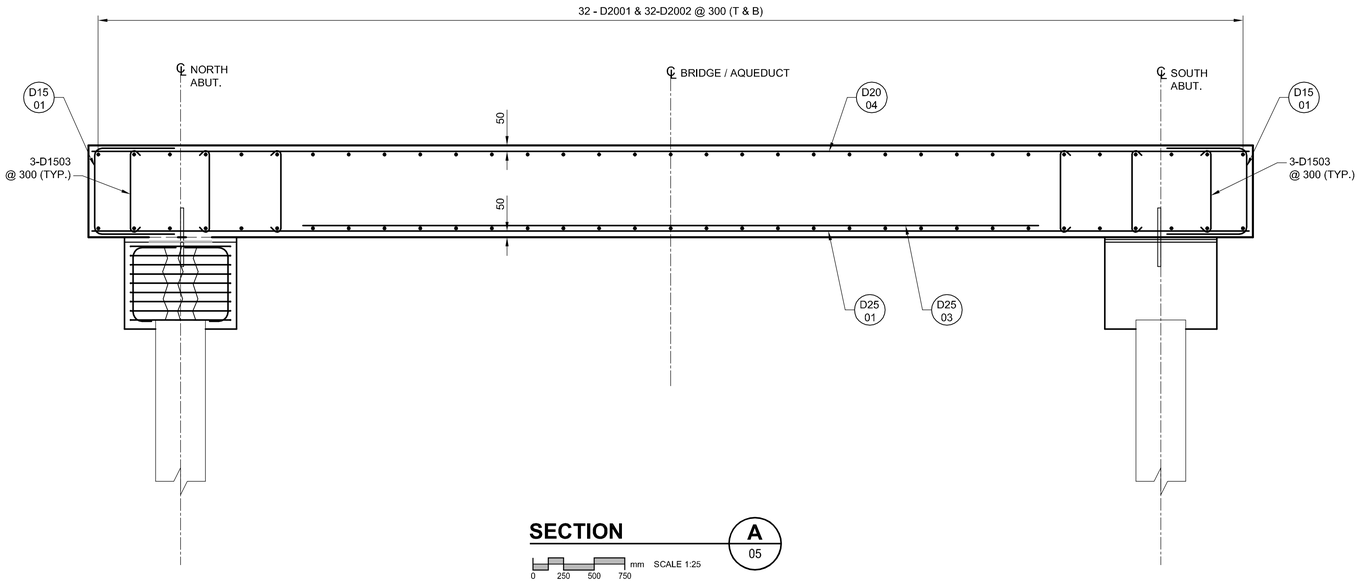

SECTION A 05

0 250 500 750 mm SCALE 1:25

BILL OF REINFORCING STEEL FOR SLAB AND PILE CAPS							
STRAIGHT BARS				BENT BARS (continued)			
MK.	No.	LENGTH	MASS	MK.	No.	LENGTH	MASS
D2001	64	18000	2713				
D2002	64	7050	1063				
D2004	80	9400	1771				
D2501	222	9400	8191				
D2503	30	6000	707				
BENT BARS							
MK.	No.	LENGTH	MASS				
D1501	130	1900	388				
D1502	46	1855	134				
D1503	624	1100	1078				
D2003	48	6000	678				
D2005	30	3200	226				
D2502	30	3200	377				
D2504	16	7900	496				
D2505	20	6400	502				
P1501	180	3260	921				
P2501	240	1100	1036				
TOTAL MASS OF REINFORCING STEEL							20280 kg
TOTAL VOLUME OF STRUCTURAL CONCRETE							190 m^3

BENDING DIAGRAM

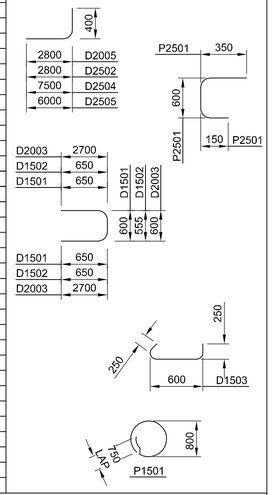

NOTES:

1. ALL DIMENSIONS GIVEN ARE OUT TO OUT, EXCEPT RADII ARE INSIDE DIMENSIONS.
2. ALL REINFORCING STEEL SHALL BE DEFORMED REINFORCING, UNLESS NOTED OTHERWISE IN THE ABOVE BILL OF REINFORCING STEEL.
3. ALL REINFORCING STEEL SHALL CONFORM TO CAN/CSA G30.16-M92 GRADE 400W UNLESS NOTED OTHERWISE IN THE ABOVE BILL OF REINFORCING STEEL.
4. LIKE BARS SHALL BE BUNDLED, SECURELY TIED AND IDENTIFIED AS TO MARK AND SITE No. BY APPROPRIATE MEANS. ALL OTHER ITEMS SHALL BE IDENTIFIED IN A SIMILAR FASHION.

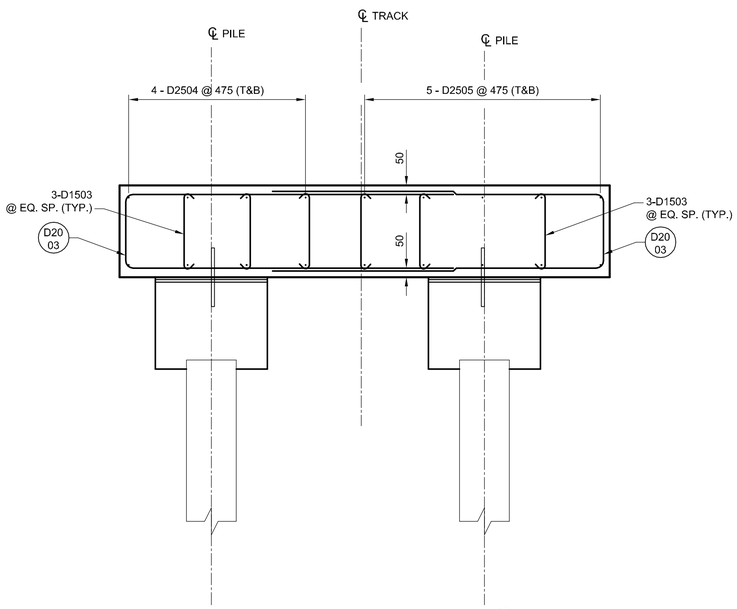

SECTION B 05

0 250 500 750 mm SCALE 1:25

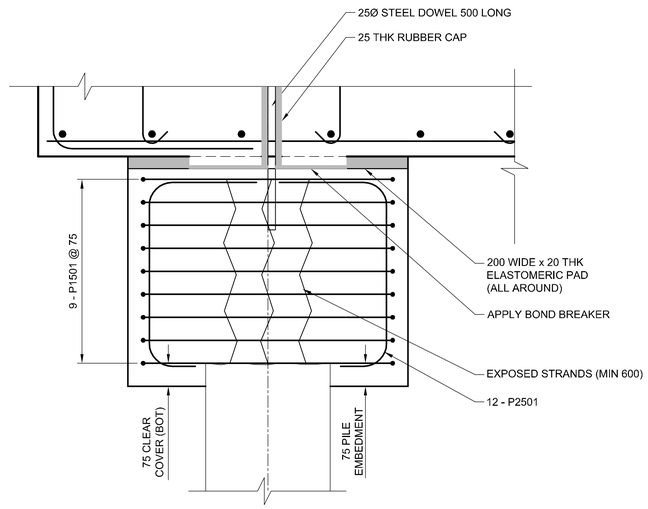

DETAIL 1 —

0 100 200 300 mm SCALE 1:10

METRIC
WHOLE NUMBERS INDICATE MILLIMETRES
DECIMALIZED NUMBERS INDICATE METRES

BID OPPORTUNITY NO. 475-2011

BM 00-000
ELEV 200.000m

NO.	REVISIONS	YY/MM/DD	BY
B	ISSUED FOR TENDER	11/07/04	EDM
A	ISSUED FOR REVIEW	11/05/27	EDM

AECOM

This drawing has been prepared for the use of AECOM's client and may not be used, reproduced or relied upon by third parties, except as agreed by AECOM and its client, as required by law or for use by governmental reviewing agencies. AECOM accepts no responsibility, and denies any liability whatsoever, to any party that modifies this drawing without AECOM's express written consent. Do not scale this document. All measurements must be obtained from stated dimensions.

DESIGNED BY	AP	CHECKED BY	SBB
DRAWN BY	EDM	APPROVED BY	EBL
HOR. SCALE	AS SHOWN	RELEASED FOR CONSTRUCTION	
VERT. SCALE	AS SHOWN		
DATE	11/05/16	DATE	

PROFESSIONAL'S SEAL
PROVINCE OF MANITOBA
A. POCHANART
Member 30017
6 July 11
REGISTERED PROFESSIONAL ENGINEER

CONSULTANT DRAWING NO.
60196984-01-S-106-R0X.dwg

Winnipeg

THE CITY OF WINNIPEG
WATER & WASTE DEPARTMENT
ENGINEERING DIVISION

GWWD AQUEDUCT BRIDGING STRUCTURE AT MILE 13.19
SECTION REINFORCEMENT

CITY DRAWING NUMBER D-12477
SHEET 6 OF 7
DRAWING No. 06 REV B

PLOT: 11/07/06 11:51:46 AM
AECOM FILE NAME: 60196984-01-S-106-R0X.dwg Saved By: mayugae