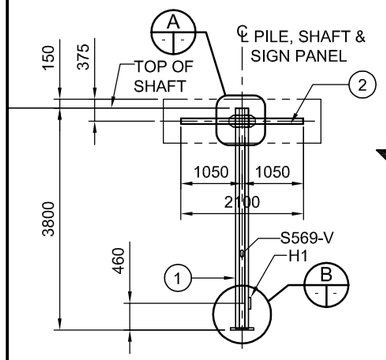

ELEVATION
1: 100

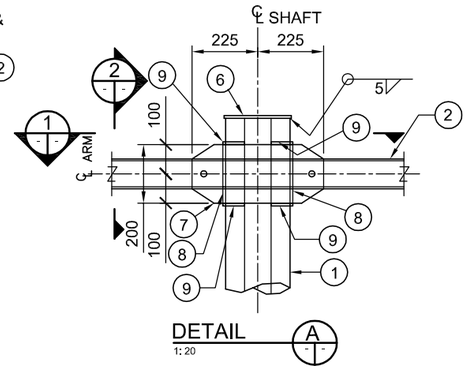

DETAIL A
1: 20

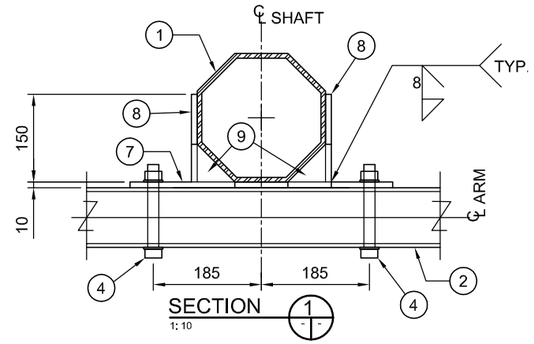

SECTION 1
1: 10

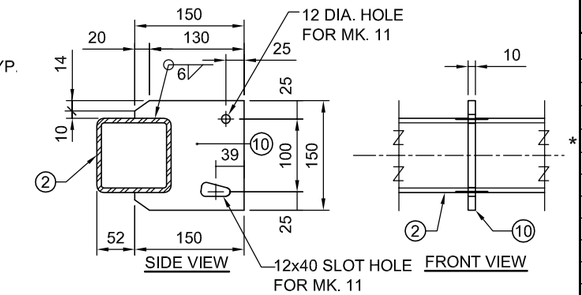

SIGN MOUNTING BRACKET DETAIL
1: 8 FOR SIGN PANEL

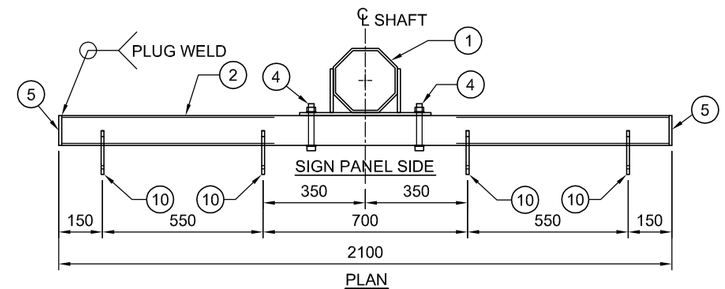

PLAN

SIGN MOUNTING BRACKET LAYOUT
1: 20

BILL OF MATERIALS

	MK.	QTY	DESCRIPTION
	1	1	OCTAGONAL SHAFT 220 A/F x 8
	2	1	CROSS ARM HSS 102 x 102 x 6.4
	3	1	BASE PLATE 38 THICK
*	4	2	19 DIA. ASTM A325 HOT-DIP GALV. BOLTS
	5	2	ARM END COVER PLATE 102 x 102 x 6
	6	1	COVER PLATE 240 DIA. 10 THICK
	7	1	FRONT GUSSET PLATE 450 x 200 x 10
	8	2	SIDE GUSSET PLATE 200 x 150 x 10
	9	4	STIFFENER PLATE 10 THICK
			SIGN MOUNTING BRACKETS (4-REQ'D.EA. ARM)
	10	4	BRACKET PLATE 10 THICK
*	11	8	10 DIA. BOLTS S/S (TYPE 316)
			HANDHOLE MARK H1
	12	1	COVER PLATE 11 GA. x 160x 340 (A569)
	13	1	REINFORCING RING 8 x 65 x 830
*	14	2	CLAMP BAR 6 x 40 x 180
*	15	2	10 DIA. x 140 BOLT S/S (TYPE 316)
*	16	1	GROUND STUD ASSEMBLY 10 DIA. x 40

* NOTES:

1. MARK NO. 4 & 11 C/W NUT AND WASHER.
2. MARK NO. 14 C/W 8-DIA. PUNCHED 10 N.C. TAPPED AT THE CENTER OF PLATE.
3. MARK NO. 15 C/W CUP WASHER.
4. MARK NO. 16 C/W 2-10 DIA. HEX NUT, 2-TERMINAL WASHER. & 1-LOCKWASHER

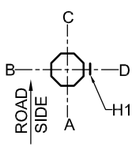

ORIENTATION
1: 40

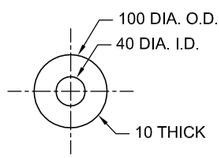

OVERSIZE WASHER DETAIL
1: 8

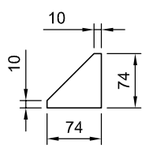

STIFFENER PL. MK. 9 DETAIL
1:8

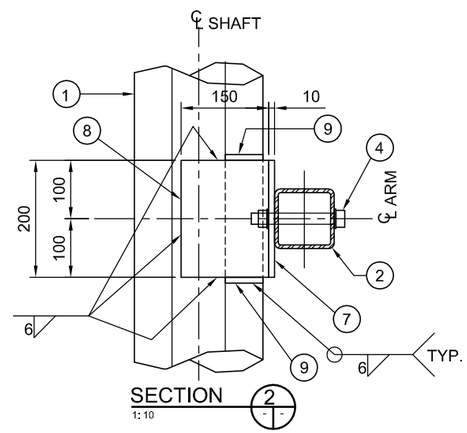

SECTION 2
1: 10

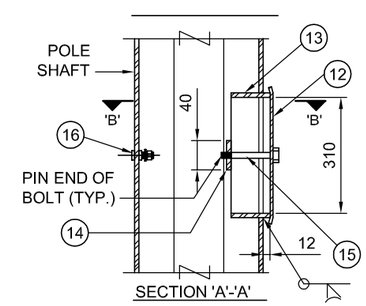

SECTION 'A'-'A'

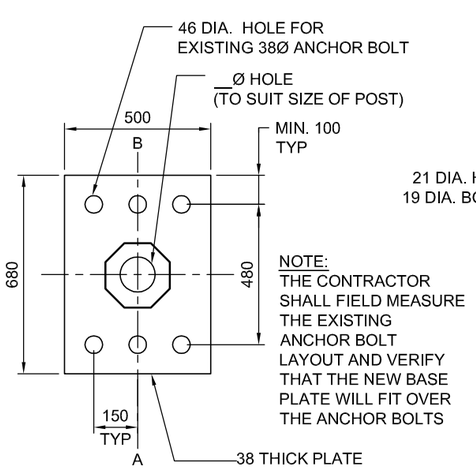

NOTE:
THE CONTRACTOR SHALL FIELD MEASURE THE EXISTING ANCHOR BOLT LAYOUT AND VERIFY THAT THE NEW BASE PLATE WILL FIT OVER THE ANCHOR BOLTS

BASE PLATE DETAIL
1: 20

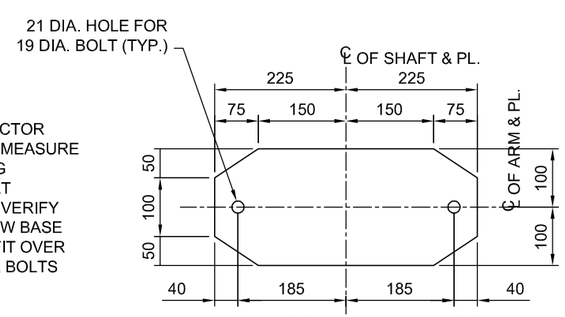

GUSSET PL. MK. 7 DETAIL
1: 10

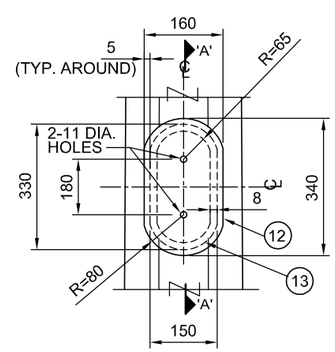

FRONT-ELEVATION

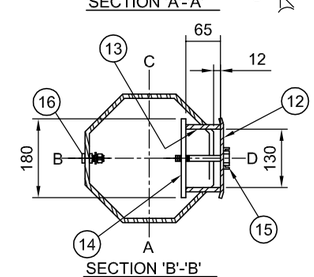

SECTION 'B'-'B'

HANDHOLE-MARK H1
1: 10

GENERAL NOTES

1. DESIGN DATA

   AASHTO STANDARD SPECIFICATIONS FOR STRUCTURAL SUPPORTS FOR HIGHWAY SIGNS, LUMINAIRES, AND TRAFFIC SIGNALS, 5TH EDITION, 2009.

   DESIGN WIND LOAD = 1.44 kPa (30 PSF)

   DESIGN ICE LOAD = 0.15 kPa (3 PSF)
2. ALL MATERIALS SHALL BE CSA G40.21 - 350W STRUCTURAL STEEL UNLESS OTHERWISE NOTED.
3. ALL MATERIALS EXCEPT STAINLESS STEEL AND ALUMINUM SHALL BE HOT-DIP GALVANIZED IN ACCORDANCE WITH CSA G164 TO A MIN. NET RETENTION OF 610 g/m².
4. ALL AREAS OF DAMAGED GALVANIZING SHALL BE REPAIRED WITH ZINC BASED SPRAY-ON COATING CALLED ZINGA.
5. NEW STRUCTURE TO BE INSTALLED ON EXIST. CONCRETE PILE FOUNDATION AND ANCHOR BOLTS.
6. NEW 75 mm. MAX. GROUT PAD TO BE PROVIDED AFTER INSTALLING THE STRUCTURE.
7. SIGNS

   ONE SIGN PANEL

   MAXIMUM SIZE 2100 WIDE x 750 HIGH

   SUPPLIED AND INSTALLED BY THE CITY OF WINNIPEG

   TRAFFIC SERVICES BRANCH

SECTION 'D'-'D'

TYPICAL STRUCTURE IDENTIFICATION NUMBER SIZE
NTS

NOTES

1. PROVIDE "RAISED" IDENTIFICATION NO. WITH WELDING ELECTRODE FOR THE SIGN STRUCTURE.
2. GRIND ALL SHARP POINTS AND EDGES.

NO.	REVISIONS	DATE	BY
1	ISSUED FOR TENDER	07/08/11	CDW

B.M. ELEV.

DESIGNED BY	CDW
DRAWN BY	APH
CHECKED BY	SSR
APPROVED BY	
HOR. SCALE	AS SHOWN
VERTICAL	AS SHOWN
DATE	JULY 2011

DILLON CONSULTING

RELEASED FOR CONSTRUCTION
ORIGINAL SIGNED BY B.A. NEIRINCK
DATE 07/08/11

ENGINEER'S SEAL
PROVINCE OF MANITOBA
ORIGINAL SIGNED BY
S.S. RIHAL
JULY 8, 2011
REGISTERED PROFESSIONAL ENGINEER

CONSULTANT PROJECT NO.
11-4597

Winnipeg
THE CITY OF WINNIPEG
PUBLIC WORKS DEPARTMENT

STEEL OVERHEAD SIGN SUPPORT STRUCTURES - 2011 MAINTENANCE WORKS

CITY DRAWING NUMBER
OHSS-11-06

SHEET 6 OF 12

STRUCTURE NO. S569 DETAILS

CONSULTANT DRAWING NUMBER

g:\CAD\114597\Contract\Current\OHSS-11-06.dwg