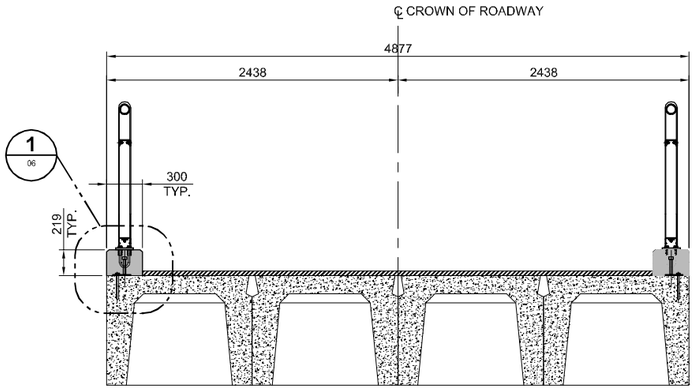

SECTION A 02

0 0.25 0.5 0.75 m SCALE 1:25

BTWN N. ABUT AND PIER 1

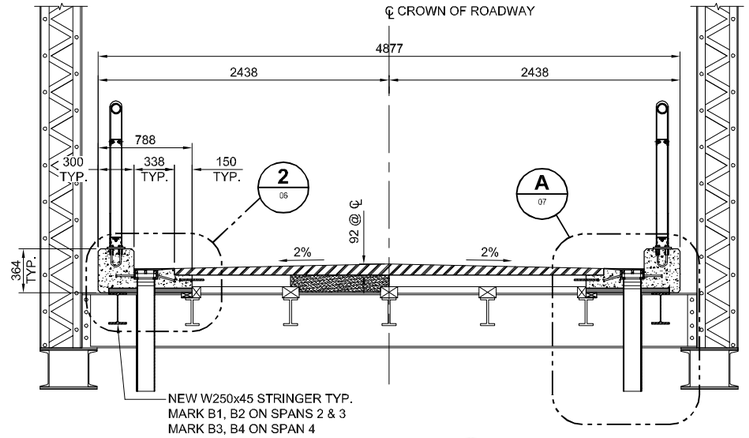

SECTION B 02

0 0.25 0.5 0.75 m SCALE 1:25

BTWN PIER 1 AND PIER 4
AT DRAINS

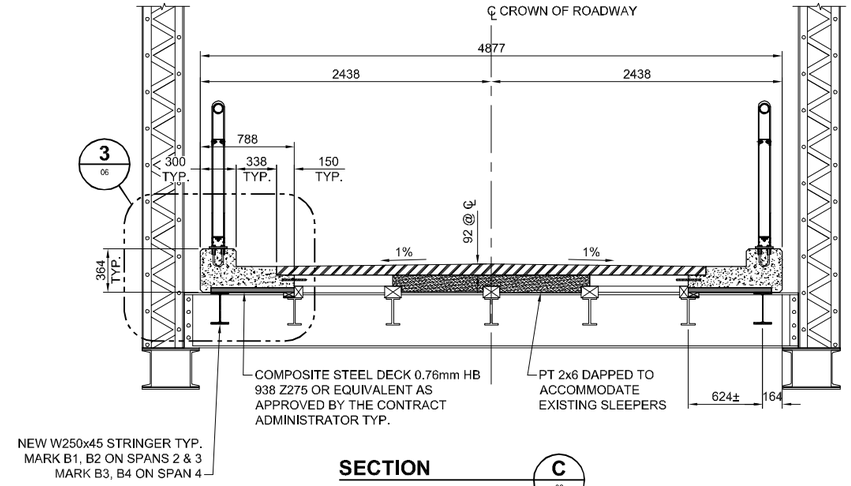

SECTION C 02

0 0.25 0.5 0.75 m SCALE 1:25

BTWN PIER 1 AND PIER 4
AT MID-POINT OF DRAINS

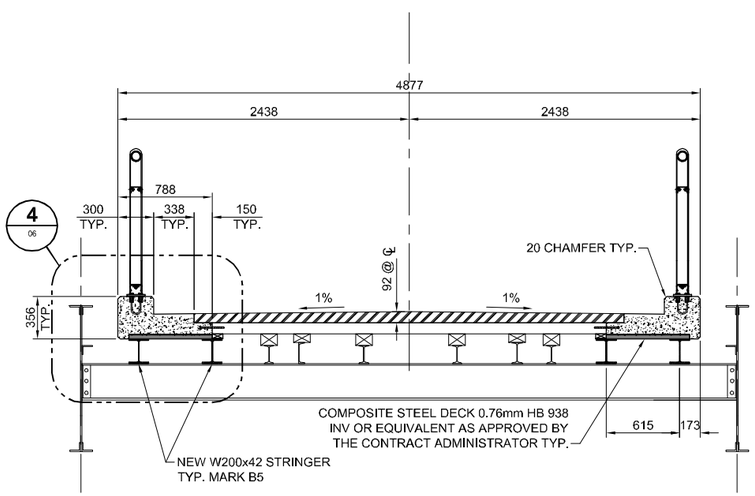

SECTION D 02

0 0.25 0.5 0.75 m SCALE 1:25

BTWN PIER 4 AND NORTH BENT

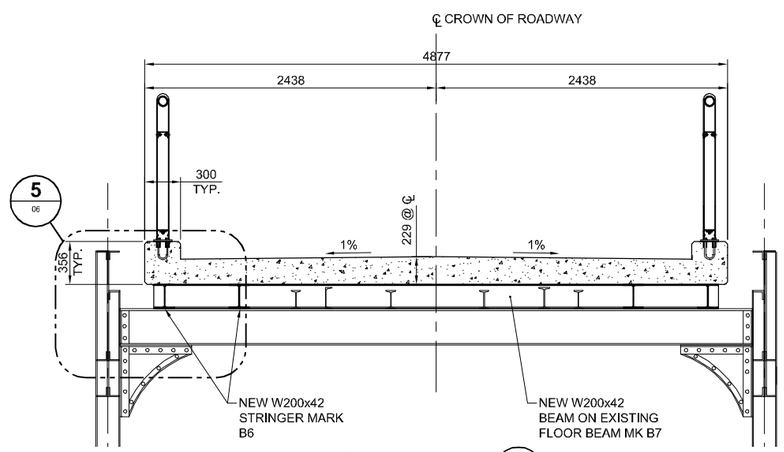

SECTION E 02

0 0.25 0.5 0.75 m SCALE 1:25

AT THE SOUTH BENT

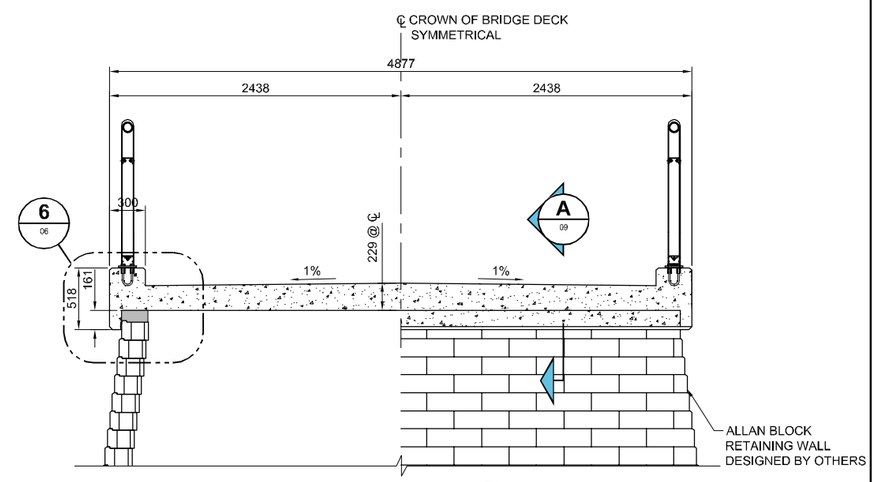

SECTION F 02

0 0.1 0.2 0.3 m SCALE 1:10

NEW ABUTMENT

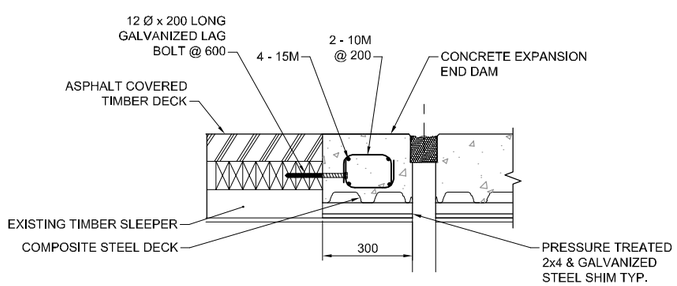

TYPICAL END DAM A 04

0 0.1 0.2 0.3 m SCALE 1:10

Certificate of Authorization
AECOM Canada Ltd.
No. 4671 Date: 11/07/27

BID OPPORTUNITY NO. 632-2011

LOCATION APPROVED
UNDERGROUND STRUCTURES

SUPR. U/G STRUCTURES COMMITTEE DATE

NOTE:
LOCATION OF UNDERGROUND STRUCTURES AS SHOWN ARE BASED ON THE BEST INFORMATION AVAILABLE, BUT NO GUARANTEE IS GIVEN THAT ALL EXISTING UTILITIES ARE SHOWN OR THAT THE GIVEN LOCATIONS ARE EXACT. CONFIRMATION OF EXISTENCE AND EXACT LOCATION OF ALL SERVICES MUST BE OBTAINED FROM THE INDIVIDUAL UTILITIES BEFORE PROCEEDING WITH CONSTRUCTION.

NO.	REVISIONS	YY/MM/DD	BY
0	ISSUED FOR TENDER	11/07/27	KAA

AECOM

This drawing has been prepared for the use of AECOM's client and may not be used, reproduced or relied upon by third parties, except as agreed by AECOM and its client, as required by law or for use by governmental reviewing agencies. AECOM accepts no responsibility, and denies any liability whatsoever, to any party that modifies this drawing without AECOM's express written consent. Do not scale this document. All measurements must be obtained from stated dimensions.

DESIGNED BY	MSK	CHECKED BY	EBL/ARB
DRAWN BY	KC	APPROVED BY	EBL
HOR. SCALE	AS NOTED	RELEASED FOR CONSTRUCTION	
VERT. SCALE	AS NOTED		
DATE		DATE	

PROFESSIONAL'S SEAL

ORIGINAL SIGNED
BY
ANDREW BROMLEY
2011, 07, 28

CONSULTANT DRAWING NO.
60216082-S-202_RX.dwg

Winnipeg

THE CITY OF WINNIPEG
PUBLIC WORKS DEPARTMENT

ELM PARK PEDESTRIAN BRIDGE REHABILITATION

DECK SECTIONS

CITY DRAWING NUMBER B131-11-09

SHEET 05 OF 13

REV 05 0

D SIZE 22" x 34" (559mm x 864mm)

PLOT: 11/07/28 1:52:15 PM

AECOM FILE NAME: 60216082-S-202_RX.dwg Saved By: camerono1