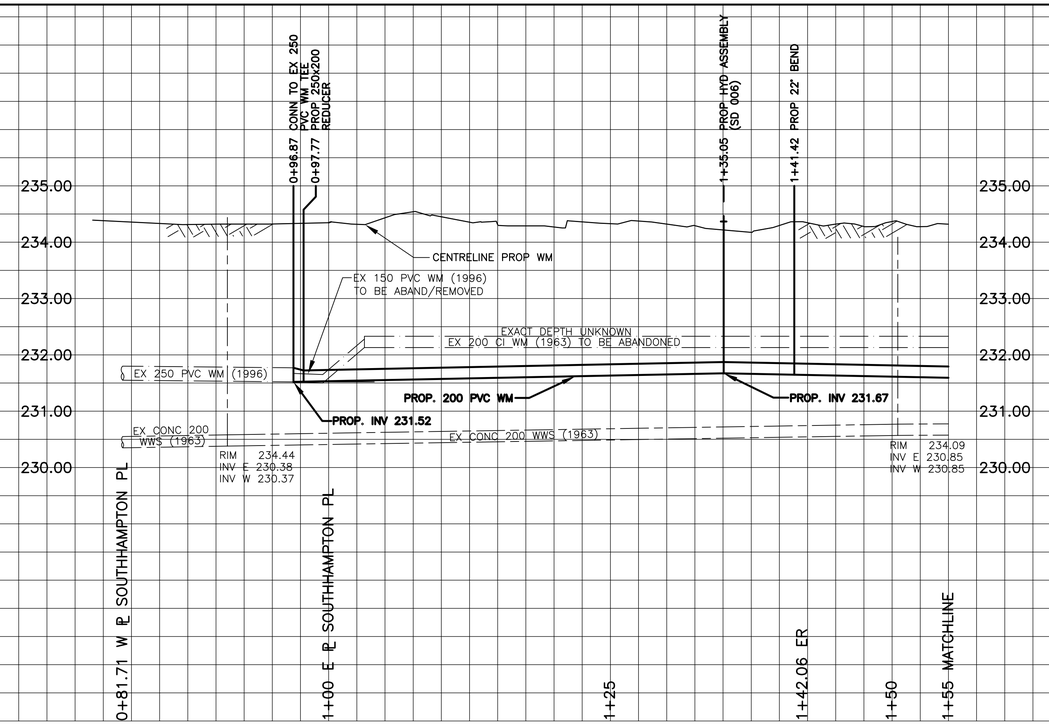

CHAINAGE ALONG SOUTH AND WEST PROPERTY LINES OF WHITEHALL BOULEVARD

WHITEHALL BOULEVARD

HOUSE WATER SERVICE INFORMATION

ADDRESS & NATURE OF SERVICE		SIZE (mm) & TYPE		SHORT & LONG MEASUREMENT	CORP LOCATION	REMARKS
69	Whitehall Blvd Residential	19	Copper	2.2 S.S.HSE LINE LOCATED IN DR.WAY LOT173		Y AT PROPERTY
70	Whitehall Blvd Residential	19	Copper	6.1 E. W. LINE 7.3 FR. HSE. FRT.		SEE SKETCH. SWR JCT - 19.2 E FR M.H. AT SOUTHAMPTON & WHITEHALL
73	Whitehall Blvd Residential	19	Copper	1.5 N. N. LINE 9.3 FR. HSE. FRT.		Y AT PROPERTY
74	Whitehall Blvd Residential	19	Copper	6.2 E. W. LINE 7.8 FR. HSE. FRT.		SEE SKETCH. SWR JCT - 36 E FR M.H. AT SOUTHAMPTON & WHITEHALL
77	Whitehall Blvd Residential	19	Copper	1.7 SSL HOUSE 9 FROM HOUSE FRONT		Y AT PROPERTY
78	Whitehall Blvd Residential	19	Copper	7.6 N. S. LINE 9.8 FR. HSE. FRT.		SEE SKETCH. SWR JCT - 9.1 S FR M.H. AT N BEND OF WHITEHALL

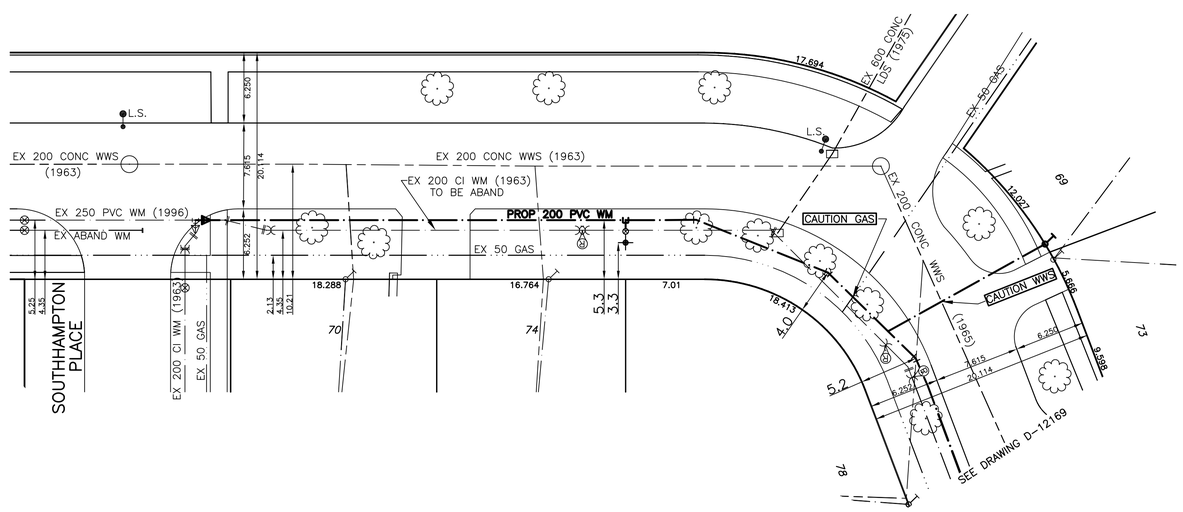

NOTES:

1. ALL GATE VALVES ARE COUNTER-CLOCKWISE TO OPEN WITH A BLACK OPERATING NUT.
2. WATERMAIN TO BE INSTALLED BY TRENCHLESS METHODS.
3. BACKFILL IS CLASS 5 WITHIN BOULEVARD AND CLASS 3 WHEN WITHIN 1.0m OF PAVEMENT OR SIDEWALK.
4. WATER SERVICES ARE 19mm UNLESS OTHERWISE NOTED.
5. MINIMUM COVER TO TOP OF WATERMAIN SHALL BE 2.4m.
6. LOCATION OF ALL SERVICES TO BE CONFIRMED IN FIELD.
7. EXPOSE EXISTING WATERMAIN TO CONFIRM DEPTH PRIOR TO CONSTRUCTION.
8. ALL LEAD SERVICES TO BE RENEWED TO PROPERTY LINE.
9. SERVICES TO BE RENEWED SHALL BE REPLACED FROM WATERMAIN TO PROPERTY LINE. ALL OTHERS TO BE RECONNECTED.

METRIC
WHOLE NUMBERS INDICATE MILLIMETRES
DECIMALIZED NUMBERS INDICATE METRES

APEGM Certificate of Authorization Genivar Consultants Limited Partnership No. 4318 Expiry April 30, 2011

EXISTING	LEGEND – PLAN	PROPOSED	EXISTING	LEGEND – PLAN	PROPOSED	EXISTING	LEGEND – PROFILE	PROPOSED
	WATERMAIN			REDUCER		150mm W.M.	WATERMAIN	150mm W.M.
	HYDRANT			PLUG			VALVE	
	VALVE			TRAFFIC SIGNAL		300mm L.D.S.	LAND DRAINAGE SEWER	300mm L.D.S.
	LAND DRAINAGE SEWER			GAS		250mm W.W.S.	WASTE WATER SEWER	250mm W.W.S.
	WASTE WATER SEWER			HYDRO			JUNCTIONS	
	MANHOLE			M.T.S.			CULVERT	
	CATCH BASIN			C.B. LEAD				
	CURB STOP			SURVEY BAR				
	TEE			TREE				
	BEND		* H.P.	HYDRO POLE				
	ANODE			LAMP STANDARD				

LOCATION APPROVED

SUPV. U/G STRUCTURES COMMITTEE — DATE

NOTE:

LOCATION OF UNDERGROUND STRUCTURES AS SHOWN ARE BASED ON THE BEST INFORMATION AVAILABLE BUT NO GUARANTEE IS GIVEN THAT ALL EXISTING UTILITIES ARE SHOWN OR THAT THE GIVEN LOCATIONS ARE EXACT. CONFIRMATION OF EXISTENCE AND EXACT LOCATION OF ALL SERVICES MUST BE OBTAINED FROM THE INDIVIDUAL UTILITIES BEFORE PROCEEDING WITH CONSTRUCTION.

B.M. CWBM 30-051
ELEV. 234.585

NO.	REVISIONS	DATE	BY

GENIVAR
10 PRAIRIE WAY WINNIPEG, MANITOBA R2J 3J8
PH: (204)-477-6650 FAX: (204)-474-2884

DESIGNED BY	PR	CHECKED BY	SM
DRAWN BY	PR	APPROVED BY	IMcK
HOR. SCALE:	1:250	RELEASED FOR CONSTRUCTION	ORIGINALLY SIGNED BY
VERT. SCALE:	1:50		
DATE	JULY 2010	DATE	–

ENGINEERS SEAL
PROVINCE OF MANITOBA
I. G. McKINNON
REGISTERED PROFESSIONAL ENGINEER

CONSULTANT DRAWING NO.
010-050-06

Winnipeg

THE CITY OF WINNIPEG
WATER AND WASTE DEPARTMENT

2010 CAPITAL WORKS
WATERMAIN RENEWALS
WHITEHALL BOULEVARD
SOUTHAMPTON PLACE TO
55M EAST OF SOUTHAMPTON PLACE

SHEET 1 OF 3

CITY DRAWING NO.
D-12168