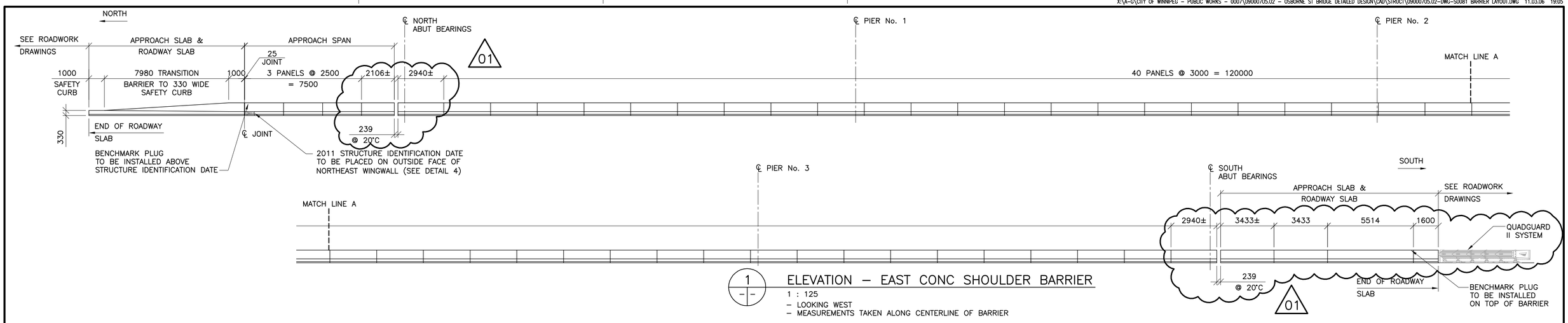

1 ELEVATION – EAST CONC SHOULDER BARRIER

1 : 125
– LOOKING WEST
– MEASUREMENTS TAKEN ALONG CENTERLINE OF BARRIER

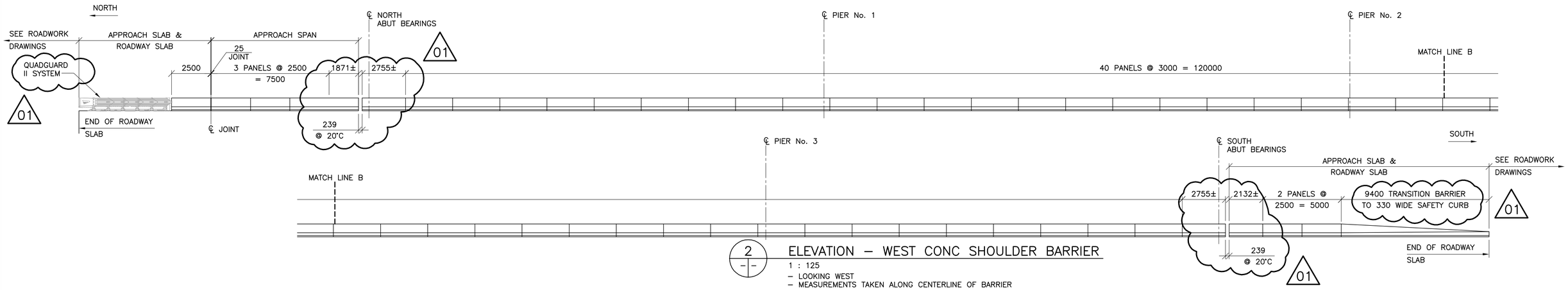

2 ELEVATION – WEST CONC SHOULDER BARRIER

1 : 125
– LOOKING WEST
– MEASUREMENTS TAKEN ALONG CENTERLINE OF BARRIER

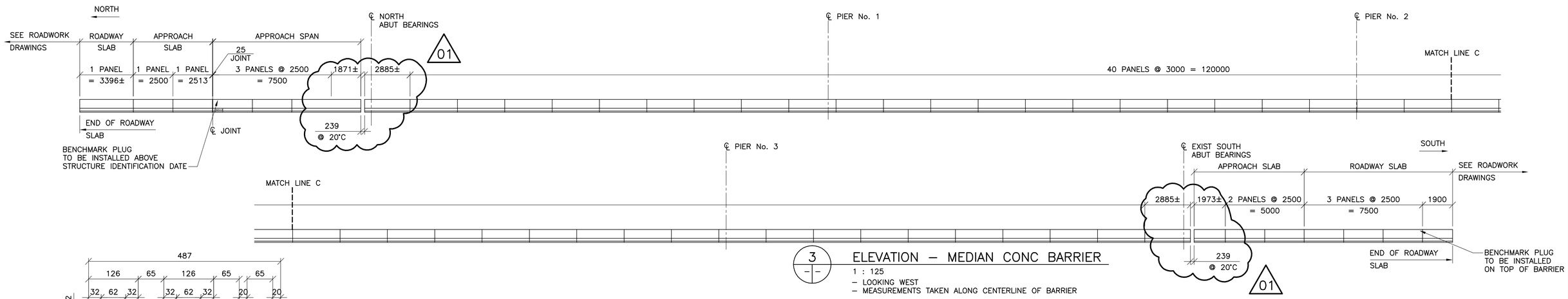

3 ELEVATION – MEDIAN CONC BARRIER

1 : 125
– LOOKING WEST
– MEASUREMENTS TAKEN ALONG CENTERLINE OF BARRIER

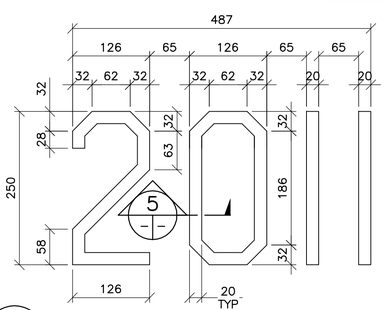

4 STRUCTURE IDENTIFICATION DATE

1:5
– REQUIRED FOR EAST WINGWALL OF NORTH ABUTMENT

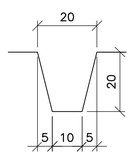

5 SECTION

1:5

APEGM
Certificate of Authorization
Wardrop Engineering Inc.
No. 195 Date: April 30, 2011

NO.	REVISIONS	DATE	BY
01	ISSUED FOR ADDENDUM 1	11.03.07	EFS
00	ISSUED FOR TENDER	11.02.18	EFS

B.M. ELEV. F.B.

WARDROP
A TETRA TECH COMPANY

DESIGNED BY	S.Y.	CHECKED BY	E.F.S.
DRAWN BY	E.M.M.	APPROVED BY	R.H.W.
HOR. SCALE: / VERTICAL:	AS NOTED	RELEASED FOR CONSTRUCTION	DATE
DATE	10.10.13	ORIGINAL SIGNED	11.02.16

MATT CHISLETT, P.ENG
BRIDGE PROJECTS ENGINEER

ORIGINAL SIGNED 11.02.16
PROVINCE OF MANITOBA
E.F.G. SHEHATA
Member 23439
REGISTERED PROFESSIONAL ENGINEER

CONSULTANT DRAWING NO.
0900070502-DWG-S0081

Winnipeg
THE CITY OF WINNIPEG
PUBLIC WORKS DEPARTMENT
ENGINEERING DIVISION

OSBORNE STREET BRIDGE
REHABILITATION & RELATED WORKS

CONCRETE BARRIER LAYOUT

CITY DRAWING NUMBER B109-11-086
SHEET 81 OF 131
81