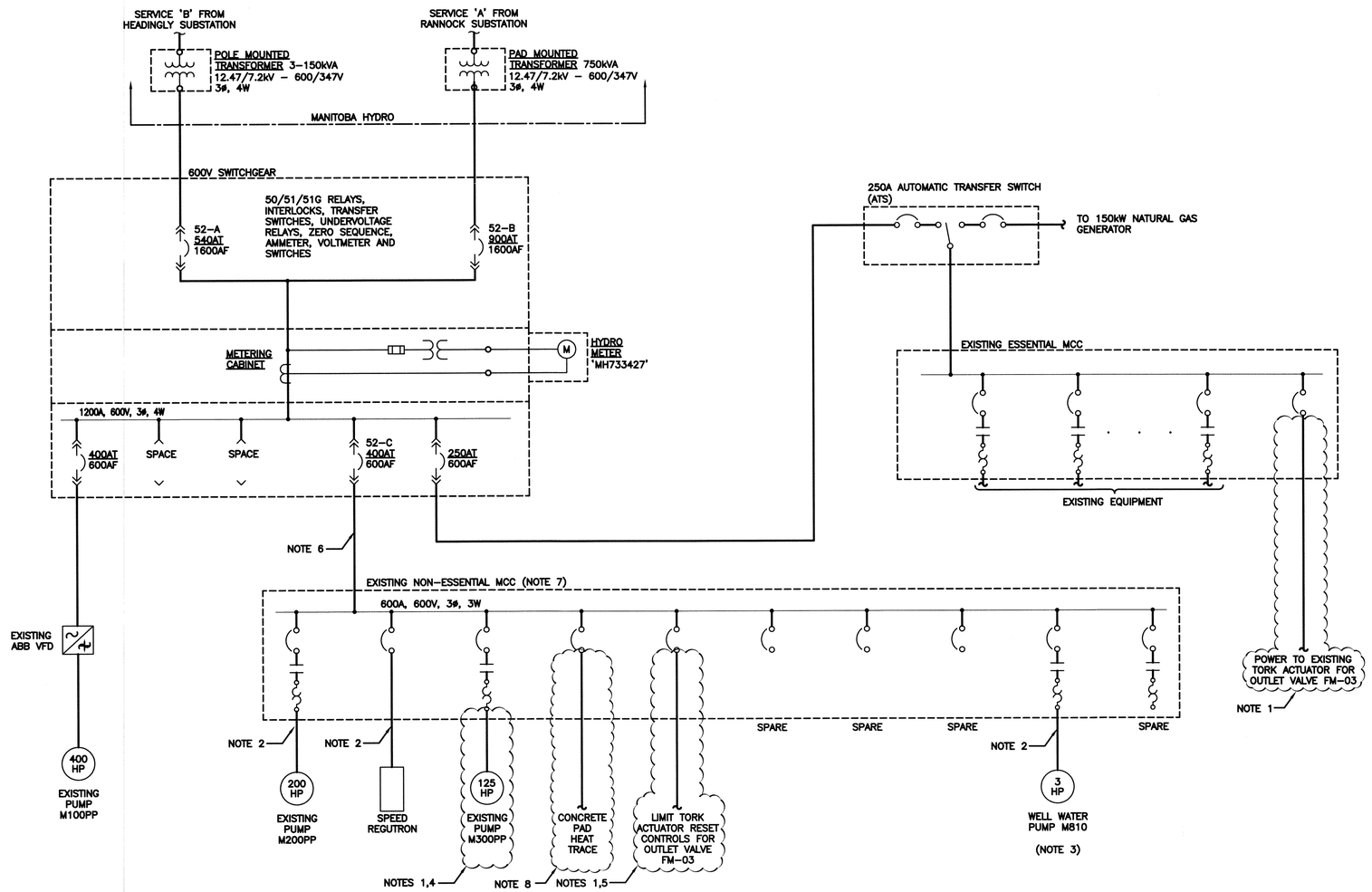

1 SINGLE LINE DIAGRAM

SCALE: N.T.S.

NOTES:

1. REMOVE ALL POWER AND CONTROL WIRING, CONTROL PANELS AND JUNCTION BOXES ASSOCIATED WITH EQUIPMENT BEING REMOVED.
2. DISCONNECT CABLING FOR EQUIPMENT FROM EXISTING MCC AND RECONNECT TO NEW MCC.
3. ALL EXISTING LABELLING ASSOCIATED WITH THE WELL WATER PUMP THAT IS LABELLED AS FLUSHING WATER PUMP SHALL BE CHANGED TO WELL WATER PUMP.
4. CONTRACTOR SHALL LABEL ALL EXISTING CONDUCTORS WHEN COMPLETING THE DEMOLITION WORK OF THE EXISTING NON-ESSENTAIL MCC. CONTRACTOR SHALL TRACE ALL EXISTING WIRING AND PROVIDE AN AS-BUILT FOR REVIEW BY THE ENGINEER.
5. EXISTING CONTROL WIRING TO BE RELOCATED FROM THE EXISTING NON-ESSENTIAL MCC (FOR THE INTERLOCKS OF VALVE FM-03) TO THE NEW FV-M601 & FV-M651 CONTROL PANEL. REFER TO EXISTING CITY DRAWING WEP-680 FOR EXISTING EQUIPMENT DETAILS.
6. EXISTING FEEDER TO BE REMOVED AND REPLACED WITH NEW.
7. CONTRACTOR SHALL REFER TO THE CONSTRUCTION PLAN UNDER APPENDIX A OF THE BOOK SPECIFICATIONS. ALL SHUT DOWNS SHALL BE COORDINATED UNDER THIS PLAN AND SCHEDULING.
8. EXISTING HEAT TRACE SYSTEM IS NO LONGER IN SERVICE AND HAS BEEN REMOVED. THE ONLY REMAINING EQUIPMENT TO REMOVE UNDER THIS PROJECT SCOPE IS THE FEEDER CABLE AND THE BREAKER WITH THE MCC.

APEGM
Certificate of Authorization
KGS Group
No. 245

FIELD BOOK #:

POSTED TO LBIS

NO.	REVISIONS	DATE	BY
0	ISSUED FOR TENDER	2011-11-07	

KGS GROUP CONSULTING ENGINEERS

DESIGNED BY	DDW	CHECKED BY	JLL
DRAWN BY	GCN	APPROVED BY	RED
HOR. SCALE	N.T.S.	RELEASED FOR CONSTRUCTION	
VERTICAL	N.T.S.		
DATE	2011 06 22	DATE	

ENGINEER'S SEAL
PROVINCE OF MANITOBA R.J. LALONDE Member 32345 REGISTERED PROFESSIONAL ENGINEER
NOV 7, 2011

E01

Winnipeg
THE CITY OF WINNIPEG
WATER AND WASTE DEPARTMENT

REPLACEMENT OF RAW SEWAGE PUMP P-3
PERIMETER ROAD PUMPING STATION
ELECTRICAL
EXISTING
SINGLE LINE DIAGRAM

SHEET 1 OF 1
CITY DRAWING NUMBER

CW-9-M564-1

FileName: P:\Projects\2010\10-0107-23\Doc.Control\ToBeIssued\DWG\720-2010_Drawing_E01-R0.dwg - Tab: E01 Plotted By: DDeroche 11/07/2011 [Mon 3:12pm]