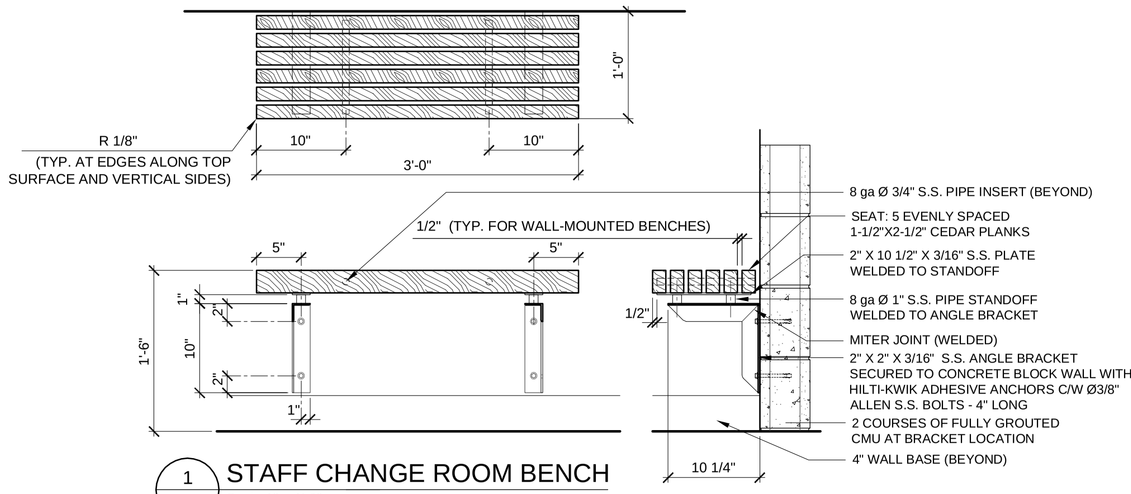

1 A-504 STAFF CHANGE ROOM BENCH
Scale 1" = 1'-0"

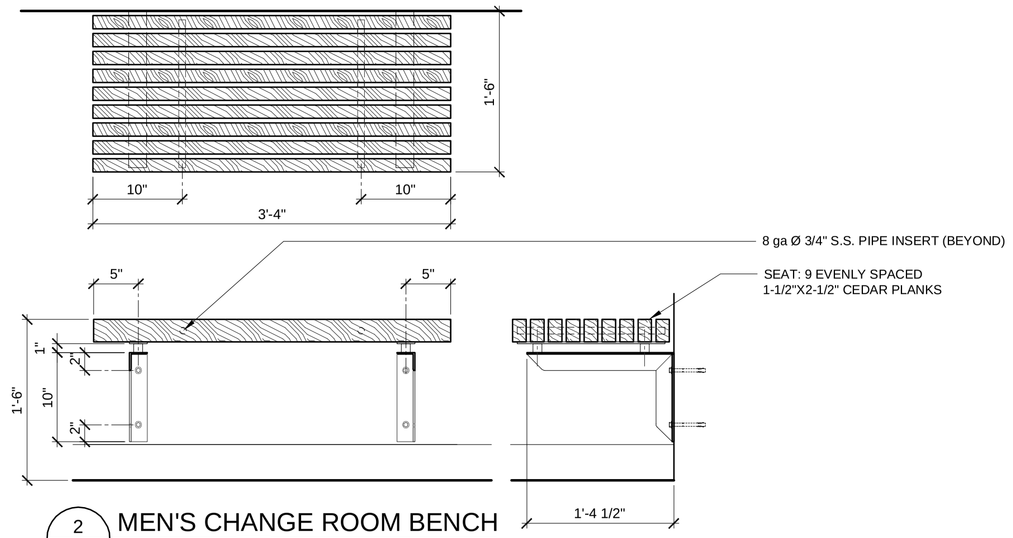

2 A-504 MEN'S CHANGE ROOM BENCH
Scale 1" = 1'-0"

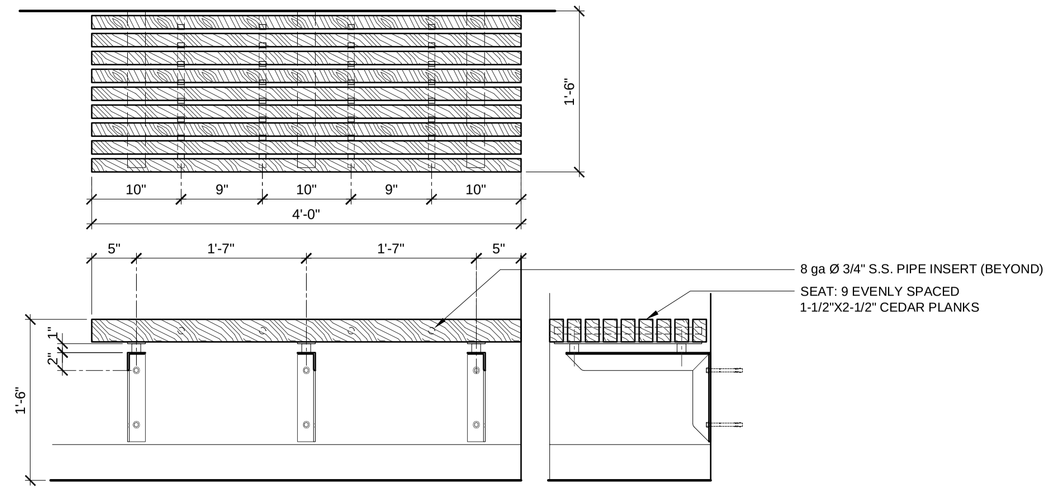

3 A-504 MEN'S CHANGE ROOM BENCH
Scale 1" = 1'-0"

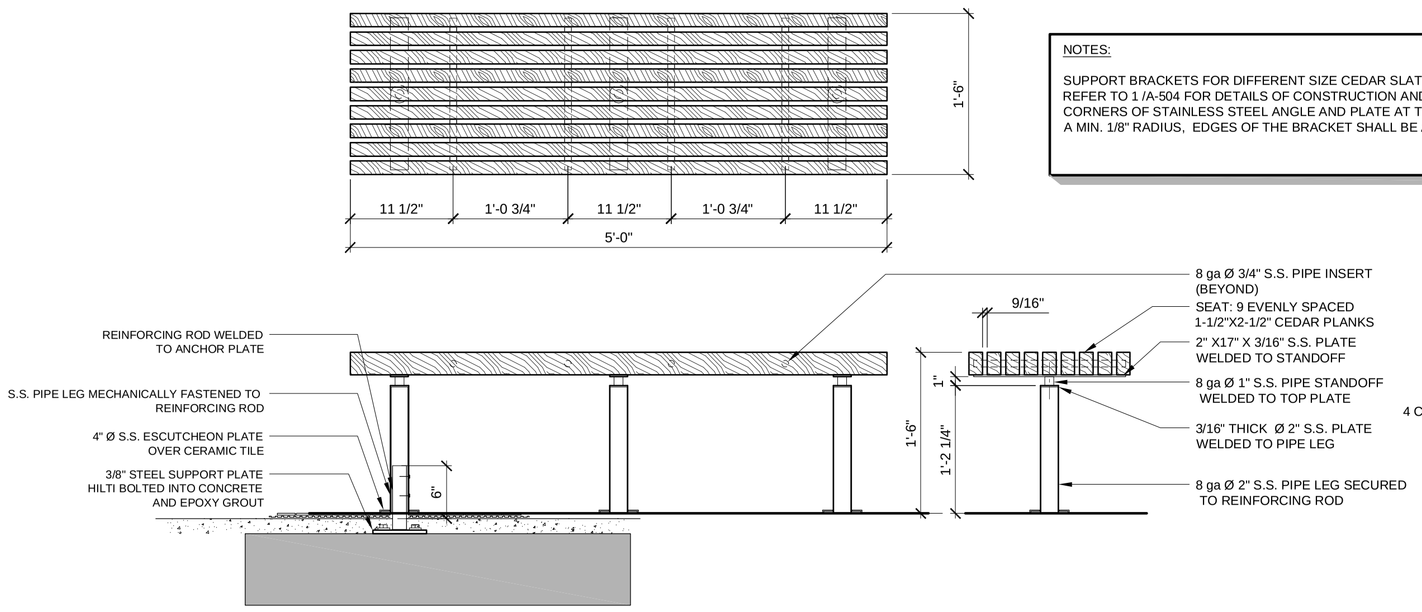

4 A-504 WOMEN'S CHANGE ROOM BENCH
Scale 1" = 1'-0"

NOTES:

SUPPORT BRACKETS FOR DIFFERENT SIZE CEDAR SLAT BENCHES ARE SIMILAR IN DESIGN. REFER TO 1 /A-504 FOR DETAILS OF CONSTRUCTION AND FASTENING REQUIREMENTS. CORNERS OF STAINLESS STEEL ANGLE AND PLATE AT THE SUPPORT BRACKET SHALL HAVE A MIN. 1/8" RADIUS, EDGES OF THE BRACKET SHALL BE ARISSED.

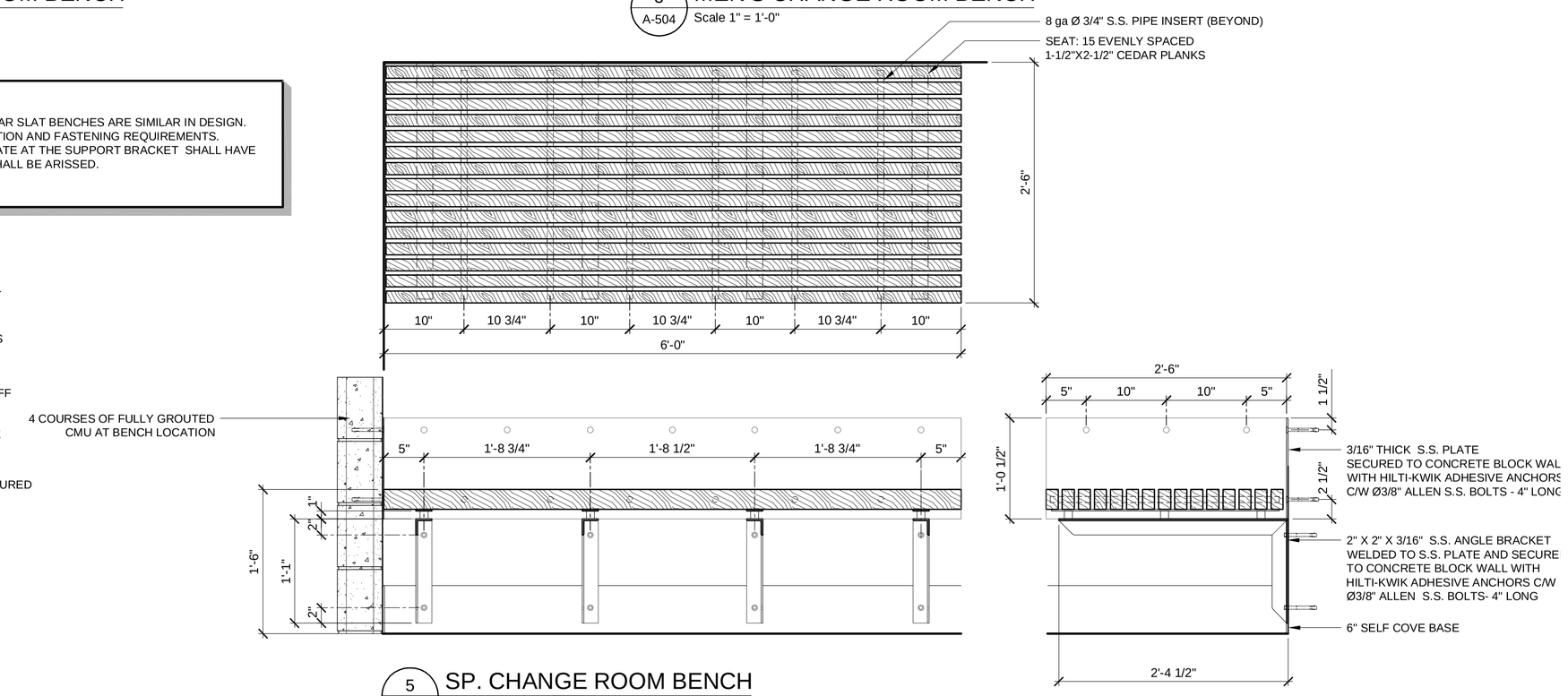

5 A-504 SP. CHANGE ROOM BENCH
Scale 1" = 1'-0"

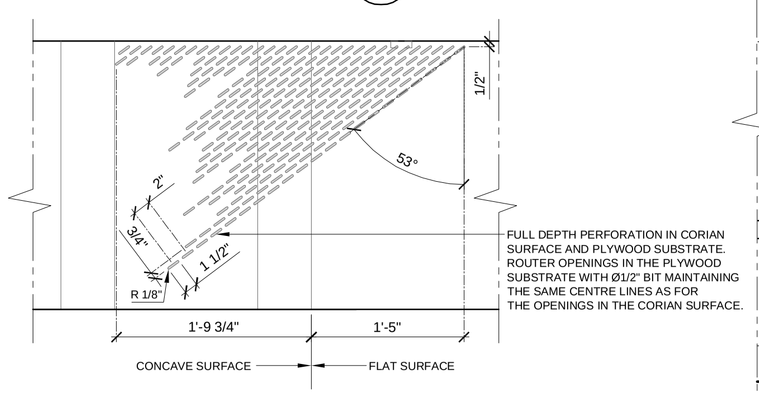

6 A-504 TRANSFER BENCH SEAT DETAIL
Scale 1" = 1'-0"

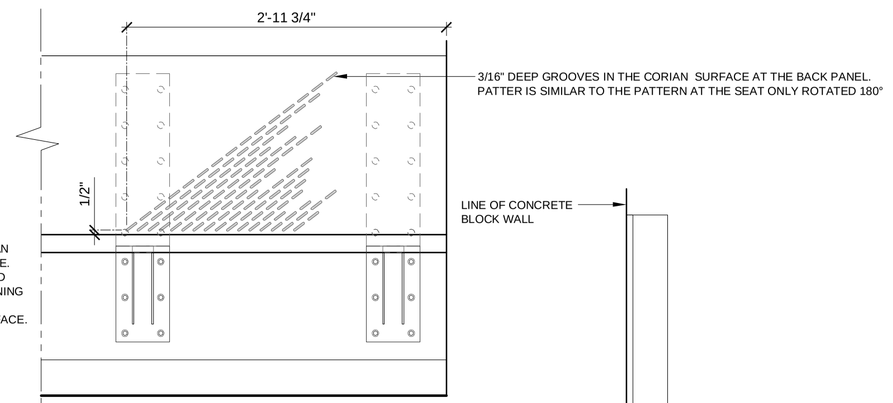

7 A-504 TRANSFER BENCH BACK PANEL DETAIL
Scale 1" = 1'-0"

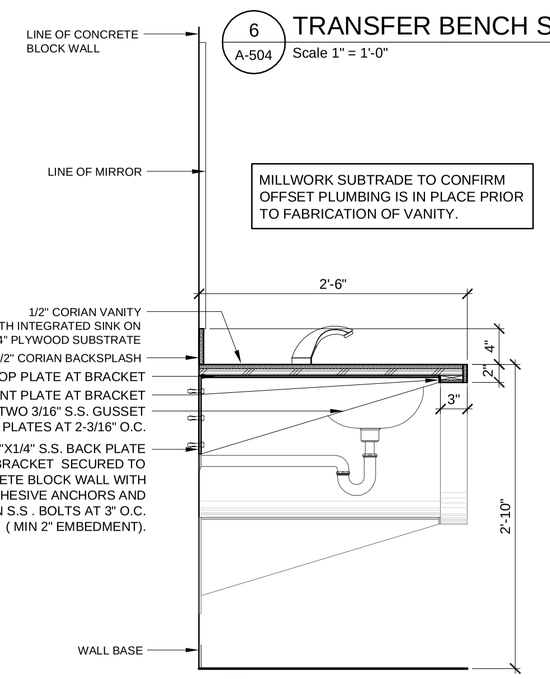

8 A-504 UTR SINK
Scale 1" = 1'-0"

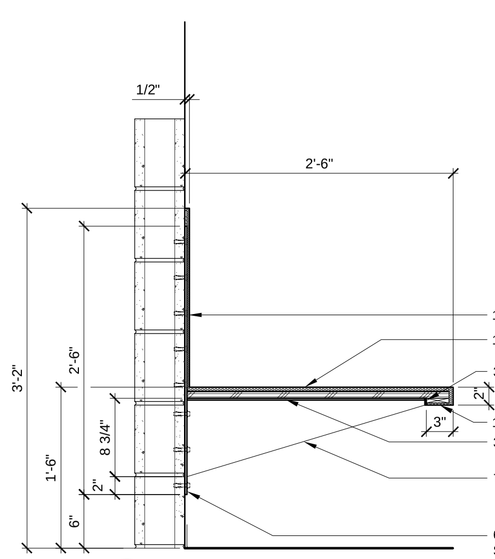

9 A-504 UTR TRANSFER BENCH
Scale 1" = 1'-0"

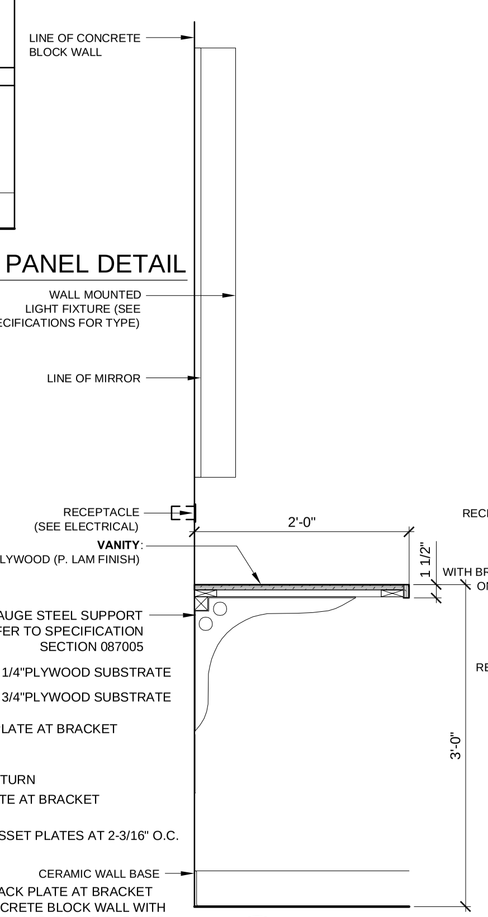

10 A-504 WCR / MCR VANITY
Scale 1" = 1'-0"

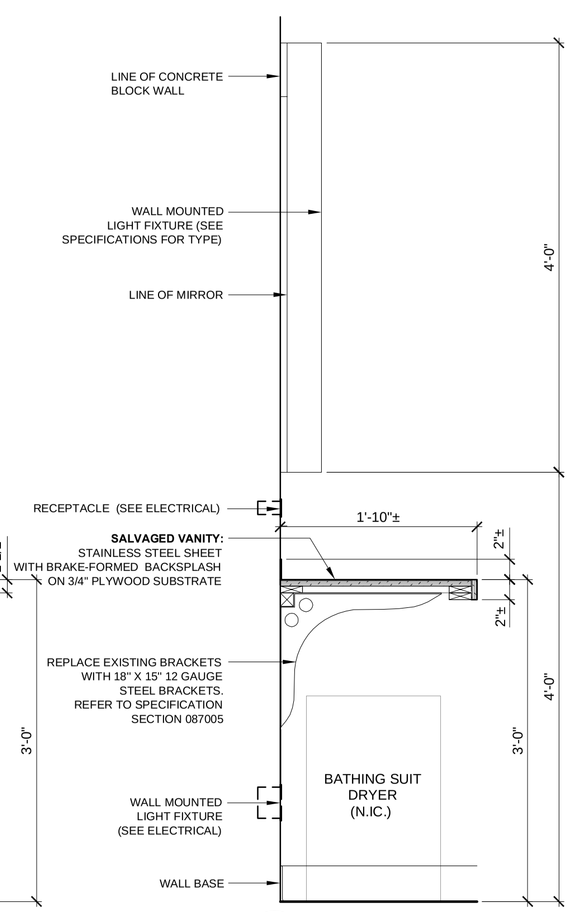

9 A-504 SCR VANITY
Scale 1" = 1'-0"

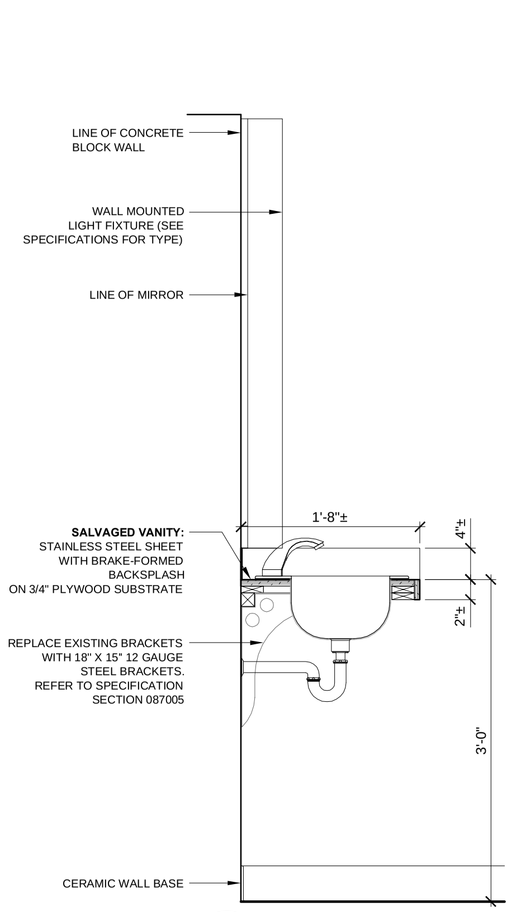

11 A-504 CHANGE ROOM COUNTER AND SINK
Scale 1' = 1'-0"

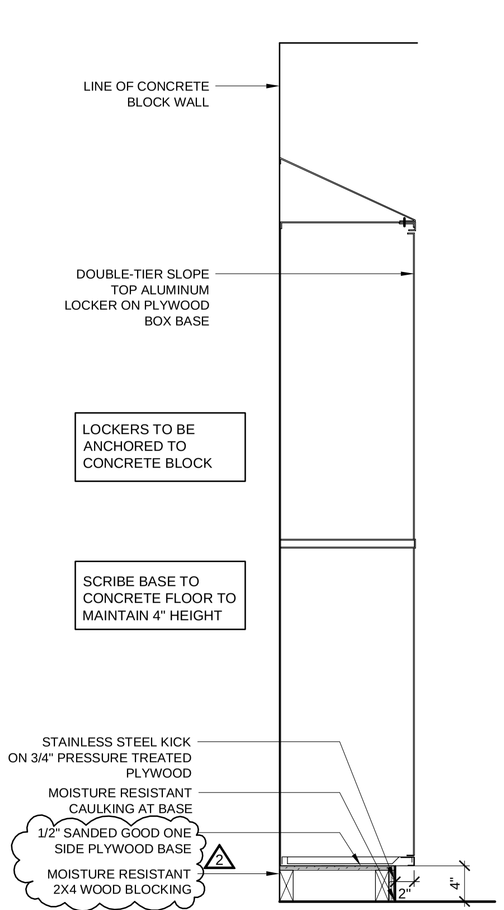

12 A-504 LOCKER
Scale 1' = 1'-0"

ADDENDUM #

ISSUED FOR

CONSTRUCTION

SEAL

ARCHITECT / PRIME CONSULTANT
SYNYSHYN ARCHITECTURE + INTERIOR DESIGN INC.
MANITOBA ALBERTA
T: 204.947-1100
F: 204.956-5742
603-63 Albert Street Winnipeg, Manitoba R3B 1G4 Canada
info@synyshyn.com
www.synyshyn.com

ENGINEERING CONSULTANT
KGS GROUP
865 Waverley Street Winnipeg, Manitoba R3T 5P4 Canada
T 204. 896. 1209
F 204. 896. 0754

ENGINEERING CONSULTANT
CROSIER KILGOUR & PARTNERS Ltd.
300-275 Carlton Street Winnipeg Manitoba R3C 5R6 Canada
T 204. 943. 7501
F 204. 943. 7507

OWNER
CITY OF WINNIPEG
Planning, Property and Development Department
Municipal Accommodations Division
300-65 Garry Street Winnipeg, Manitoba R3C 4K4 Canada

PROJECT TITLE

MARGARET GRANT POOL INTERIOR RENOVATIONS

BID OPPORTUNITY NO.12-2013

685 DALHOUSIE DRIVE

DRAWING TITLE

MILLWORK DETAILS

DESIGNED BY	JS	DRAWN BY	LB
ISSUE DATE	02.26.2013	REVISION No.	01
PROJECT No.	12904	DRAWING No.	A-504