MCC REQUIREMENTS:

IDENTIFIER: MCC-F71		
ENCLOSURE TYPE: NEMA 1A	MOUNTING: FRONT	DEPTH: 508mm
SUPPLY VOLTAGE: 600V, 3ø, 3W, 60HZ		INCOMING NEUTRAL TERMINATION: YES
CONTROL VOLTAGE: 120V, 60HZ	WIRING: CLASS I, TYPE Bd OR Bt AS SHOWN ON THE DRAWINGS	
MINIMUM BUS RATING:	HORIZONTAL: 600A	VERTICAL: 300A
SUITABLE FOR SERVICE ENTRANCE: YES		NEUTRAL BUS: NO
BUS BRACING: 42kA	SCCR: 18kA MINIMUM	SERIES SCCR PERMITTED: NO
BUS MATERIAL: TIN PLATED COPPER		
MANUFACTURER:		MODEL:

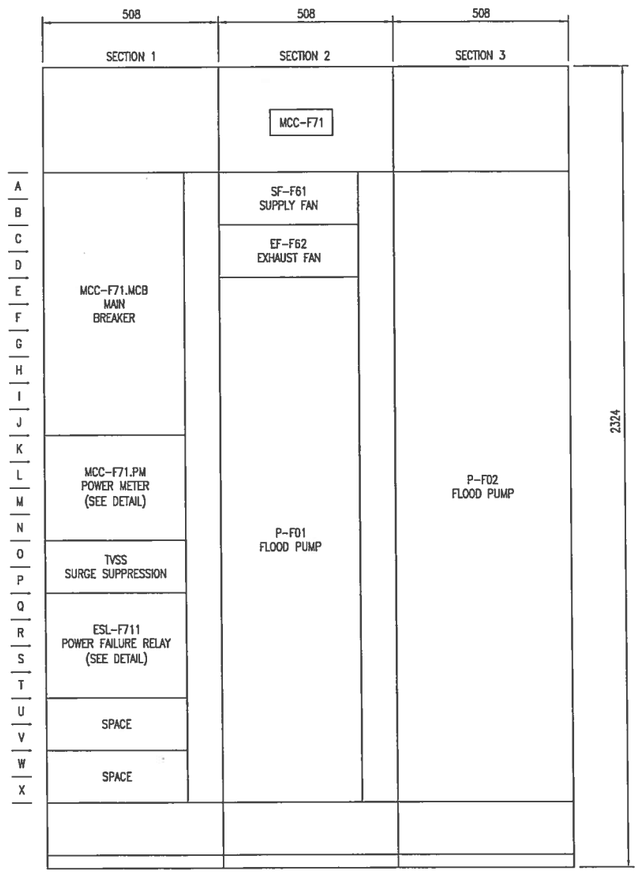

MCC-F71 ELEVATION

SCALE: NTS

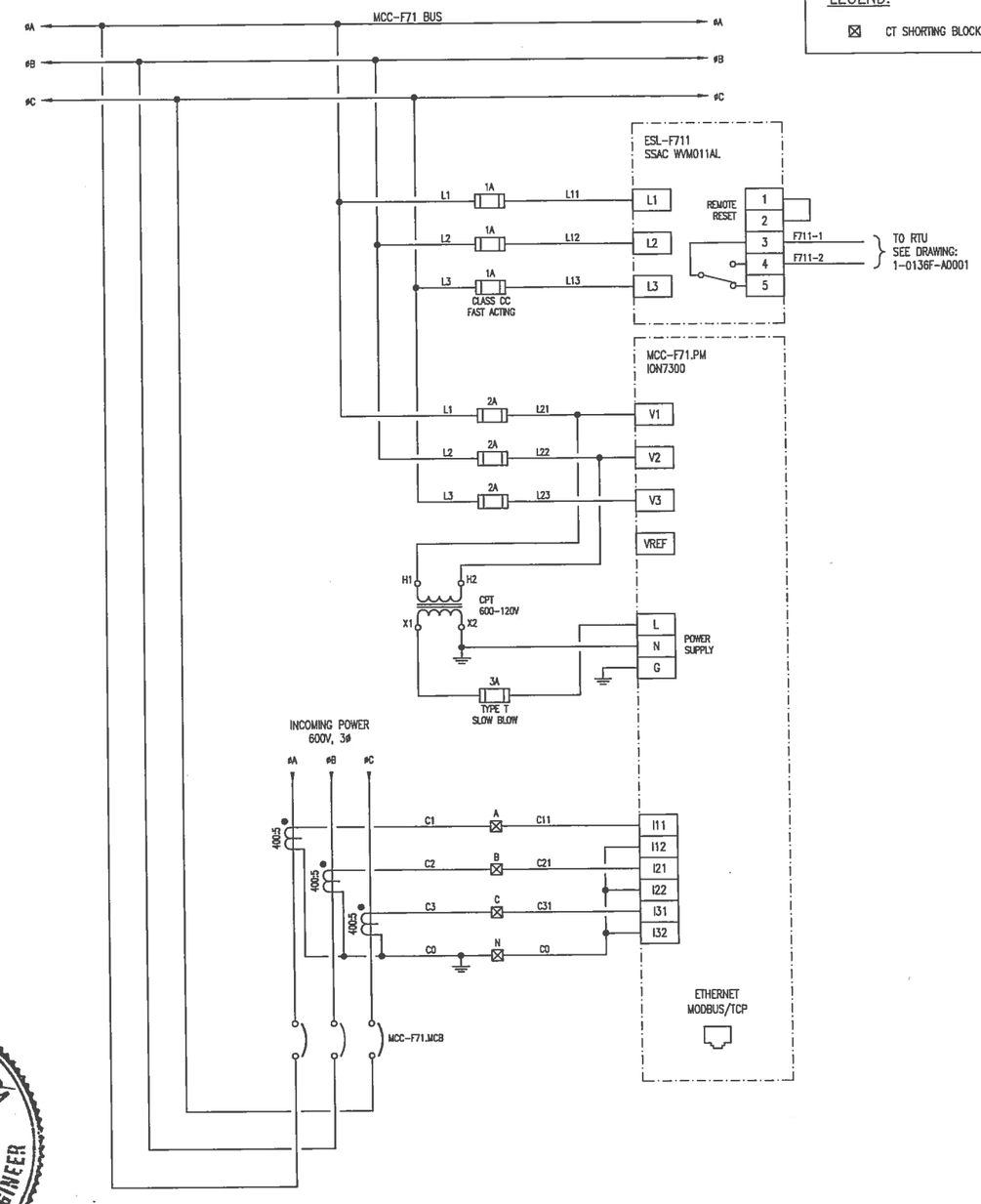

DETAIL: MCC-F71 POWER METER AND VOLTAGE MONITOR

SCALE: NTS

LEGEND:

⊠ CT SHORTING BLOCK TERMINAL

PROVINCE OF MANITOBA
C. J. REIMER
Member
21968
REGISTERED PROFESSIONAL ENGINEER

2013-02-26
Rev 00

NOTES:

1. COMPLETE ASSEMBLY TO HAVE A SHORT CIRCUIT CURRENT RATING OF 18kA OR HIGHER.
2. PROVIDE HOUSEKEEPING PAD BENEATH THE MCC. PAD TO BE 100mm HIGH, EXTEND 150mm ON EACH SIDE, AND 50mm IN FRONT OF THE EQUIPMENT, WITH 19mm CHAMFERED EDGES. ROUGHEN SURFACE AND APPLY BONDING AGENT. PROVIDE 10M REINFORCEMENT AT 300mm SPACING. ANCHOR PAD TO THE FLOOR SLAB WITH 10M REBAR HOOKS AT 300mm SPACING, DOWELLED TO THE EXISTING CONCRETE WITH HILTI ADHESIVE.

DRAWING NUMBER	REFERENCE DRAWINGS
1-0136F-E0001	SINGLE LINE DIAGRAM
1-0136F-E0006	FLOOD PUMP P-F02 STARTER SCHEMATIC
1-0136F-E0004	FLOOD PUMP P-F01 STARTER SCHEMATIC

APEGM
Certificate of Authorization
SNC-Lavalin Inc.
No. 4489

NO.	REVISIONS	DATE	DESIGN	CHECK
00	ISSUED FOR TENDER, BID OPP. 177-2013	2013/02/25	BJC	

SNC·LAVALIN
SNC-LAVALIN INC.
148 Nature Park Way
Winnipeg, MB, Canada R3P 0X7
204-786-8080

DESIGNED BY: B. CLEVEN	CHECKED BY:
DRAWN BY: S. FUNK	APPROVED BY:
SCALE: NTS	RELEASED FOR CONSTRUCTION BY: R. GREENING
DATE: 2012/11/01	DATE: 2013/02/25
CONSULTANT NO.: 611511-0000-47DD-0003	

ENGINEER'S SEAL

Winnipeg
THE CITY OF WINNIPEG
WATER AND WASTE DEPARTMENT

DESPINS FLOOD PUMPING STATION

MCC ELEVATION AND DETAILS
MCC-F71

CITY DRAWING NUMBER	SHEET	REV.	SIZE
1-0136F-E0003	001	00	A1

1-0136F-E0003-001-00.dwg

A1 SIZE - 594mm x 841mm

LAST SAVE: 2013/02/26 - 10:20am
PATH: M:\611511\4ENG\47ELE\00 - General DWG\1-0136F-E0003-001-00.dwg