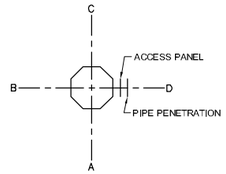

ORIENTATION

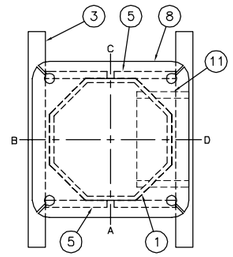

PLAN–TOP VIEW

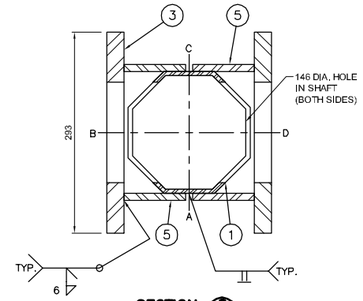

SECTION 2 NTS

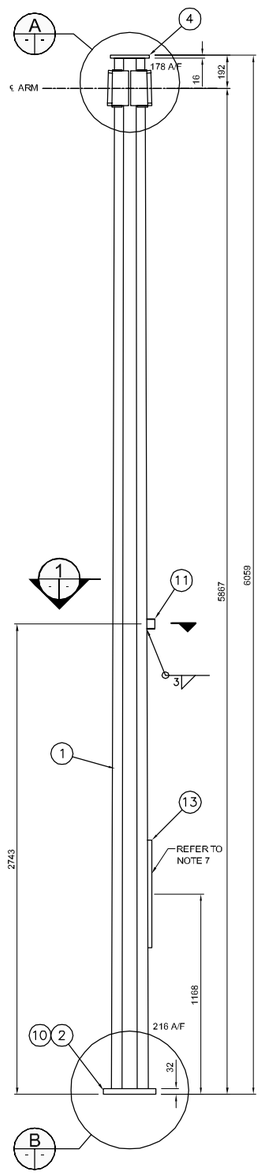

SHAFT ELEVATION NTS

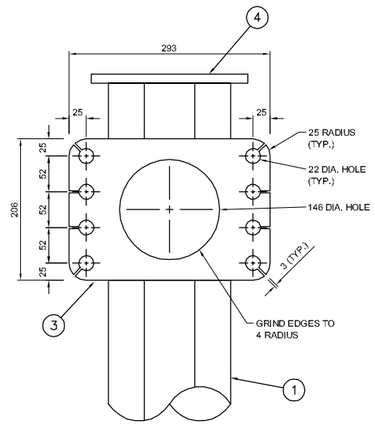

FRONT VIEW

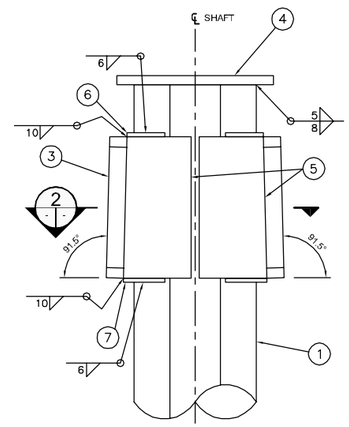

SIDE VIEW

CONNECTION PLATE DETAIL A NTS

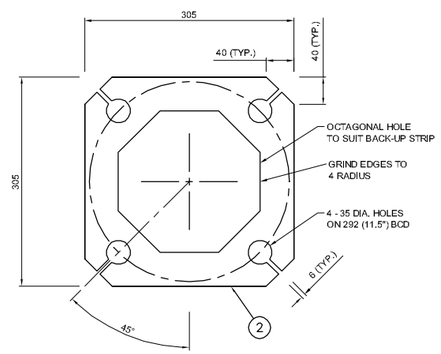

PLAN

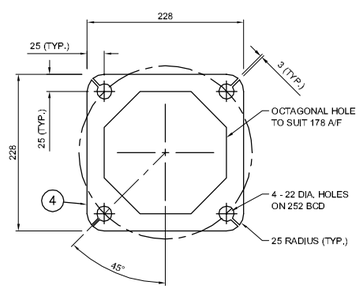

EXTENSION FLANGE PLATE DETAIL C NTS

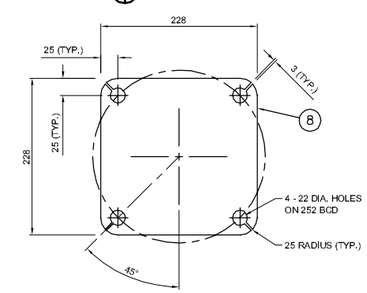

EXTENSION FLANGE CAP PLATE DETAIL D NTS

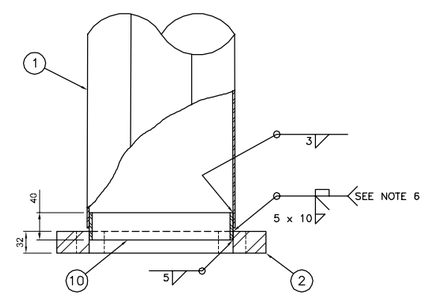

ELEVATION

BASE PLATE DETAIL B NTS

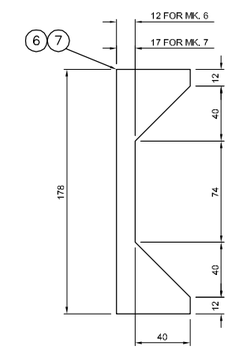

GUSSET PLATE
MK. 6 AND MK. 7

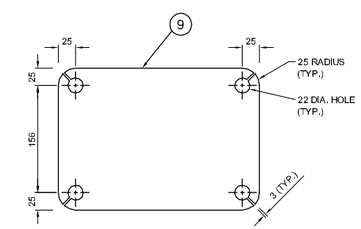

FLANGE CAP PLATE
MK. 12

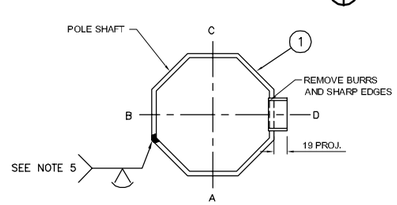

SECTION 1 NTS

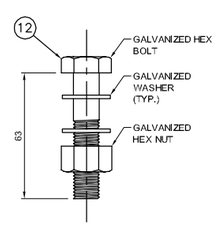

CAP BOLT DETAIL E NTS

BILL OF MATERIALS

MK. NO.	QTY. REQ'D.	DESCRIPTION	SIZE	MATERIAL	REMARKS	LINE NO.
		DOUBLE MEDIUM DUTY SHAFT – DM				1
1	1	OCTAGONAL SECTION SHAFT	216 A/F – 178 A/F x 4.554	CSA G40.21 350W		2
2	1	BASE PLATE	32 x 305 x 305	CSA G40.21 300W		3
3	2	ARM FLANGE PLATE	25 x 206 x 293	CSA G40.21 300W		4
4	1	EXTENSION FLANGE PLATE	16 x 228 x 228	CSA G40.21 300W	SEE DETAIL C	5
5	4	SIDE PLATES	6 x 103 x 206	CSA G40.21 300W		6
6	2	TOP GUSSET PLATE	10 x 52 x 178	CSA G40.21 300W		7
7	2	BOTTOM GUSSET PLATE	10 x 57 x 178	CSA G40.21 300W		8
8	1	EXTENSION FLANGE CAP PLATE	6 x 228 x 228	CSA G40.21 300W	SEE DETAIL D	9
9	1	FLANGE CAP PLATE	6 x 206 x 293	CSA G40.21 300W		10
10	1	BACK–UP STRIP PLATE	4.554 x 40	CSA G40.21 350W		11
11	1	PIPE PENETRATION (1 1/2") C/W PLUG	48 O.D. X 25	ASTM A53 GR. B SCH. 40	REMOVE BURRS AND SHARP EDGES	12
12	8	CAP BOLTS	19 (3/4") DIA. x 63	ASTM A325	SEE DETAIL E	13
						14
13	1	ACCESS PANEL			SEE NOTE 7	15
						16
14	1	BREAKAWAY BASE ASSEMBLY			SUPPLIED BY OTHERS	

APPROXIMATE TOTAL MASS = 180 kg

NOTES:

1. ALL MATERIALS, EXCEPT STAINLESS STEEL ITEMS, SHALL BE HOT DIP GALVANIZED IN ACCORDANCE WITH ASTM A123–09 (PLUS LATEST REVISIONS) WITH NET RETENTION OF 610 g/m².
2. PROVIDE RAISED IDENTIFICATION NUMBER WITH WELDING ELECTRODE AS PER SPECIFICATION, STRUCTURE TYPE CODE = DM.
3. SHIP WITH EXTENSION FLANGE CAP PLATE & FLANGE CAP PLATE C/W NUTS AND WASHERS INSTALLED.
4. GRIND ALL SHARP POINTS AND EDGES.
5. LONGITUDINAL SEAM WELD SHALL HAVE 60% MINIMUM PENETRATION EXCEPT WITHIN 150 mm OF BASE PLATE AND 400 mm OF EXTENSION FLANGE PLATE SHALL BE COMPLETE PENETRATION.
6. EXTERIOR WELD JOINING SHAFT TO BASE PLATE SHALL BE AN UNEQUAL LEG COMPLETE PENETRATION WELD WITH THE LONG LEG OF THE WELD ALONG THE SHAFT, TERMINATING AT 30° FROM THE SHAFT'S SURFACE.
7. PROVIDE ACCESS PANEL IN ACCORDANCE WITH SHEET 13.

APEGM
Certificate of Authorization
Dillon Consulting Limited (MB)
No. 1789 Date: JAN. 14, 2013

REDUCED DRAWING
N.T.S.

NO.	REVISIONS	DATE	BY
1	ISSUED BY DILLON CONSULTING	1/14/13	CDW

B.M. ELEV.

DESIGNED BY CDW
DRAWN BY JGW
CHECKED BY SSR
APPROVED BY –
HOR. SCALE NTS
VERTICAL NTS
DATE

DILLON CONSULTING

RELEASED FOR CONSTRUCTION
DATE

ENGINEER'S SEAL
PROVINCE OF MANITOBA
ORIGINAL STAMPED BY
S.S. RIHAL
JAN. 14, 2013
REGISTERED PROFESSIONAL ENGINEER

CONSULTANT PROJECT NUMBER
12-5954

Winnipeg
THE CITY OF WINNIPEG
PUBLIC WORKS DEPARTMENT

DOUBLE MEDIUM DUTY SHAFT

CITY DRAWING NUMBER
N/A
SHEET 10 OF 13
CONSULTANT DRAWING NUMBER
N/A

G:\CAD\12595A\Contract\Current\LIGHT & MEDIUM SHAFT.dwg