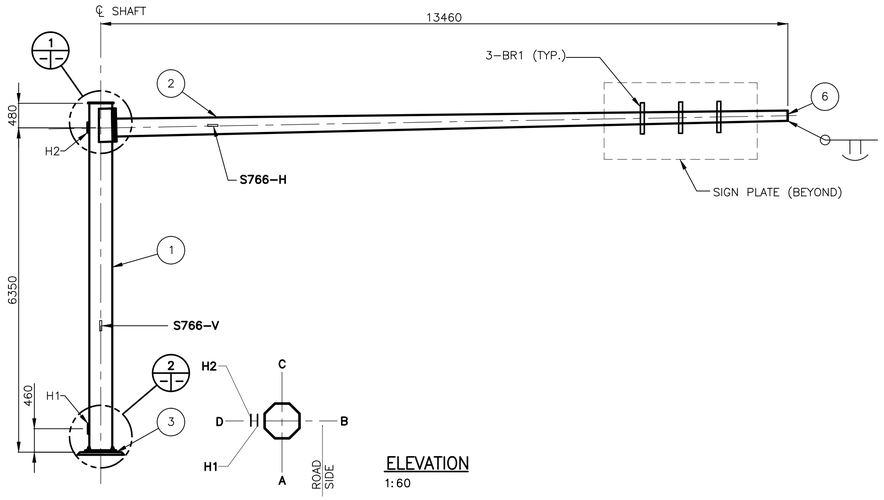

ELEVATION
1:60

ORIENTATION
1:20

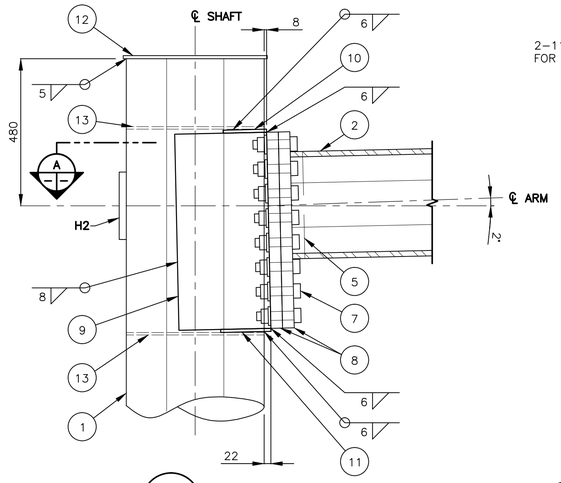

1 DETAIL

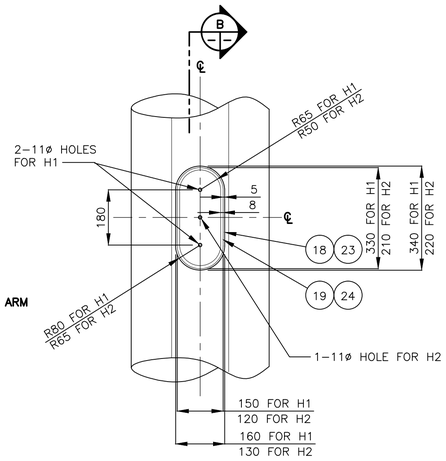

HANDHOLE ELEVATION

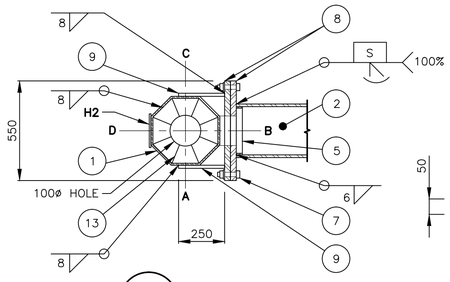

A SECTION
1:20

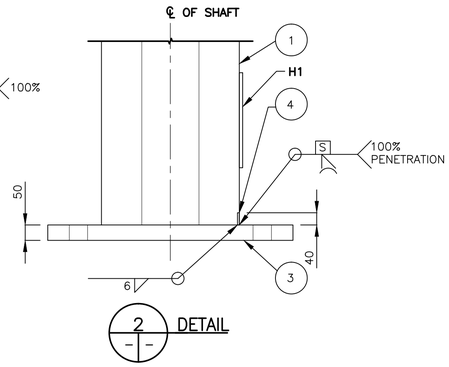

2 DETAIL

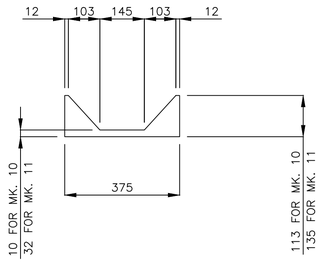

GUSSET PLATE MK. '10' & '11'

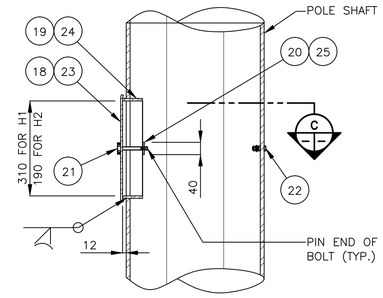

B HANDHOLE SECTION MK. 'H1' & 'H2'

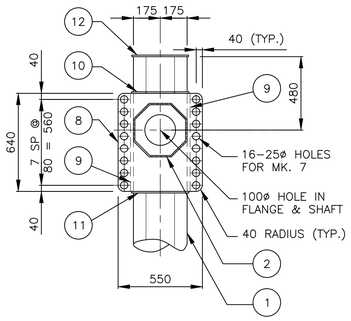

FLANGE PLATE DETAIL
1:20

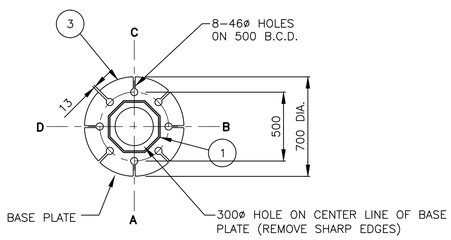

BASE PLATE DETAIL
1:20

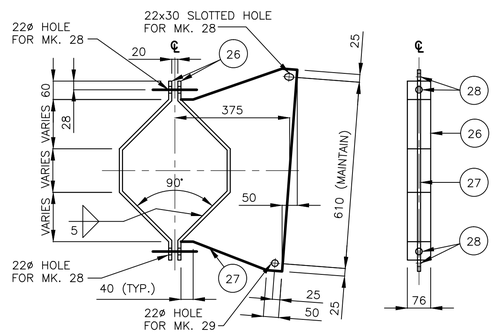

SIGN MOUNTING BRACKET MK. 'BR1' DETAIL

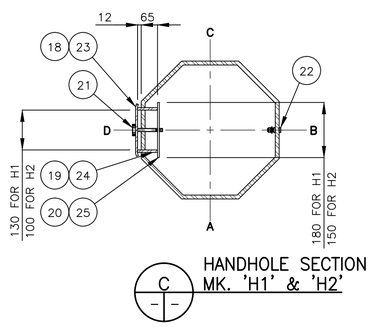

C HANDHOLE SECTION MK. 'H1' & 'H2'

BILL OF MATERIALS

MK.	QTY.	DESCRIPTION
1	1	OCTAGONAL SHAFT 350 A/F x 9.525
2	1	OCTAGONAL ARM 350 A/F TO 200 A/F x 9.525
3	1	BASE PLATE 700 DIA. x 50 THICK (GR. 300W)
4	1	BACKUP STRIP 40 x 6 (FOR SHAFT)
5	1	BACKUP STRIP 40 x 6 (FOR ARM)
6	1	END PLATE 200 A/F OCTAGONAL 6 THICK
7	16	22 DIA.x100 LG. A325 BOLTS GALV. C/W NUT&WASHER
8	2	FLANGE PLATE 550 x 640 x 38 (GR. 300W)
9	2	SIDE GUSSET PLATE 20 x 640 x 250
10	1	TOP GUSSET PLATE 10 THICK
11	1	BOTTOM GUSSET PLATE 10 THICK
12	1	COVER PLATE 370 DIA x 10 THICK
13	2	OCTAGONAL INTERIOR GUSSET PLATE 8 THICK
		HANDHOLE MARK H1 (1 REQ'D.)
18	1	COVER PLATE 11 GA. x 160 x 340 (A569)
19	1	REINFORCING RING 8 x 65 x 830
* 20	2	CLAMP BAR 6 x 40 x 180
* 21	2	9.5 DIA. x 140 BOLT S/S (TYPE 316)
* 22	1	GROUND STUD ASSEMBLY 10 DIA. x 40
		HANDHOLE MARK H2 (1 REQ'D.)
23	1	COVER PLATE 11 GA. x 130 x 220 (A569)
24	1	REINFORCING RING 8 x 65 x 555
* 25	1	CLAMP BAR 6 x 40 x 150
* 21	1	9.5 DIA. x 140 BOLT S/S (TYPE 316)
* 22	1	GROUND STUD ASSEMBLY 10 DIA. x 40
		SIGN MOUNTING BRACKET BR1 (3 REQ'D.)
26	2	CLAMP BAR 10 x 76 (LENGTH TO SUIT)
27	1	BRACKET PL. 10 THICK
28	2	19 DIA. x 76 A325 BOLT (GALV.)
* 29	2	19 DIA. x 50 S/S BOLT (TYPE 316)

*** NOTES:**

1. MARK NO. 29 C/W NUT AND LOCK WASHER.
2. MARK NO. 20 & 25 C/W DRILLED AND TAPPED AT THE CENTER OF PLATE FOR MK. 21
3. MARK NO. 21 C/W CUP WASHER.
4. MARK NO. 22 C/W 2-10ø HEX NUT, 2 TERMINAL WASHERS, & 1 LOCK WASHER.

GENERAL NOTES

1. DESIGN DATA
   AASHTO STANDARD SPECIFICATIONS FOR STRUCTURAL SUPPORTS FOR HIGHWAY SIGNS, LUMINAIRES, AND TRAFFIC SIGNALS, 5TH EDITION, 2009.

   DESIGN WIND LOAD = 1.5 kPa (32 PSF)

   DESIGN ICE LOAD = 0.15 kPa (3 PSF)
2. ALL MATERIALS SHALL BE CSA G40.21 – 350W STRUCTURAL STEEL UNLESS OTHERWISE NOTED.
3. ALL MATERIALS EXCEPT STAINLESS STEEL AND ALUMINUM SHALL BE HOT-DIP GALVANIZED IN ACCORDANCE WITH ASTM A123 TO A MIN. NET RETENTION OF 610 g/m²
4. ALL AREAS OF DAMAGED GALVANIZING SHALL BE REPAIRED WITH SELF-FLUXING LOW TEMPERATURE, ZINC BASED ALLOY ROD OR SPRAY-ON COATING CALLED "ZINGA".
5. SIGNS
   ONE SIGN PANEL
   SIZE 3000 x 1500 mm. SUPPLIED AND INSTALLED BY THE CITY OF WINNIPEG TRAFFIC SERVICES BRANCH.
6. ALL MATERIALS TO FIT AFTER GALVANIZING.

NOTES:

1. PROVIDE "RAISED" IDENTIFICATION NO. WITH WELDING ELECTRODE FOR THE SIGN STRUCTURE.
2. GRIND ALL SHARP POINTS AND EDGES.

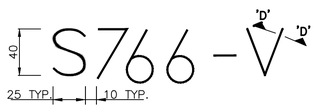

TYPICAL STRUCTURE IDENTIFICATION NUMBER SIZE

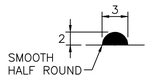

SECTION 'D'-'D'

UNDERGROUND STRUCTURES

SUPV. U/G STRUCTURES COMMITTEE — DATE

NOTE:
LOCATION OF UNDERGROUND STRUCTURES AS SHOWN ARE BASED ON THE BEST INFORMATION AVAILABLE, BUT NO GUARANTEE IS GIVEN THAT ALL EXISTING UTILITIES ARE SHOWN OR THAT THE GIVEN LOCATIONS ARE EXACT. CONFIRMATION OF EXISTENCE AND EXACT LOCATION OF ALL SERVICES MUST BE OBTAINED FROM THE INDIVIDUAL UTILITIES BEFORE PROCEEDING WITH CONSTRUCTION.

APEGM
Certificate of Authorization
Stantec Consulting Ltd.
No. 1301

B.M.
ELEV.

NO.	REVISIONS	DATE	BY
2	ISSUED FOR TENDER	3/04/08	K.S.A.
1	ISSUED FOR REVIEW	13/03/27	K.S.A.
0	ISSUED FOR 90% REVIEW	13/02/22	K.S.A.

DESIGNED BY H.M.V.
DRAWN BY T.G.
CHECKED BY K.S.A.
APPROVED BY K.S.A.
HOR. SCALE
VERTICAL
DATE

DESIGN TEAM
Stantec

RELEASED FOR CONSTRUCTION
DATE

ENGINEER'S SEAL
PROVINCE OF MANITOBA
K. S. AMY
MEMBER 23572
REGISTERED PROFESSIONAL ENGINEER

CONSULTANT PROJECT NUMBER
113705751

Winnipeg
THE CITY OF WINNIPEG
PUBLIC WORKS DEPARTMENT

WWARP PART 3 - CONTRACT 1
STA 2+922.4 TO STA 5+935

S766 - FABRICATION DETAILS

CITY DRAWING NUMBER
S766-2013-02

SHEET 49 OF 64

CONSULTANT DRAWING NUMBER
S-501

V:\113705751\active\113705751\drawing\404_working\sheet_files\05751s-501-signs-02.dwg