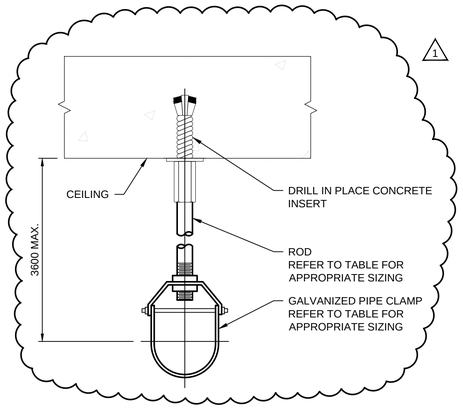

PIPE SIZE (mm)	ROD SIZE (mm)	MAX LOAD (kg)
25	9.5	331
50	9.5	331
75	12.7	612
100	15.9	648
150	19.1	880
200	19.1	907
250	22.2	1632
300	22.2	1723
350	25.4	1904
400	25.4	2086
450	25.4	2176
500	31.8	2176
600	31.8	2176

1 PIPE SUPPORT DETAIL
- NTS

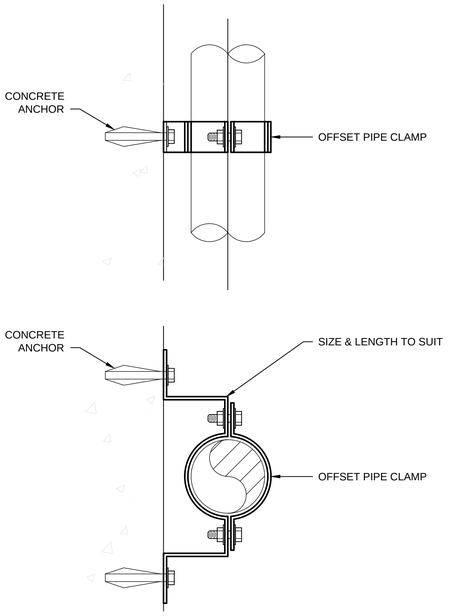

NOTES:

1. SUITABLE FOR PIPES 25Ø TO 300Ø
2. GALVANIZE ALL METAL PARTS AND HARDWARE - EXCEPT T316 SS ANCHORS
3. SUITABLE FOR WALL OR FLOOR SUPPORTED PIPE

2 PIPE SUPPORT DETAIL
- NTS

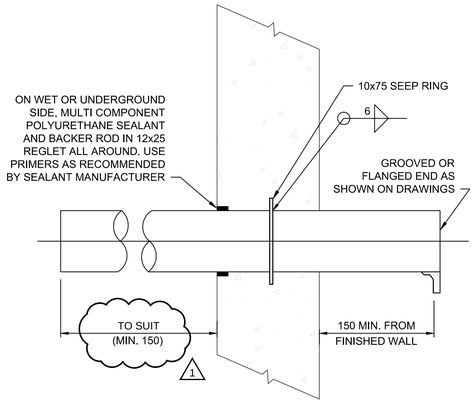

NOTES:

1. NO LONGITUDINAL MOVEMENT ALLOWED
2. LIQUID SIDE MUST PASS LEAKAGE TEST UNDER PRESSURE TO WHICH STRUCTURE IS SUBJECTED.
3. SUITABLE FOR WALL OR FLOOR APPLICATIONS

3 WALL PENETRATION DETAIL
- NTS

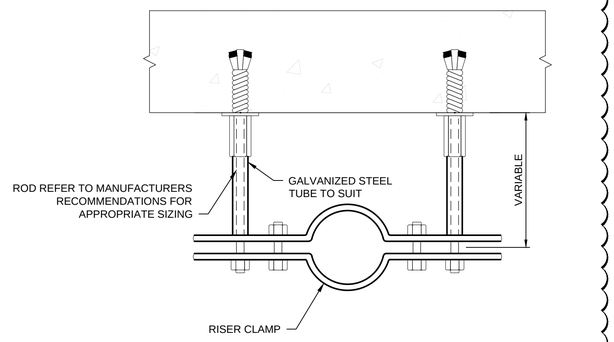

4 RISER CLAMP DETAIL
- NTS

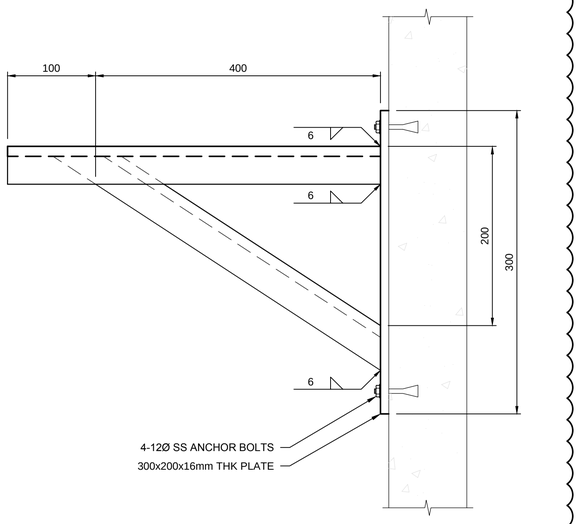

5 PIPE SUPPORT DETAIL
- NTS

METRIC
WHOLE NUMBERS INDICATE MILLIMETRES
DECIMALIZED NUMBERS INDICATE METRES

Certificate of Authorization
AECOM Canada Ltd.
No. 4671 Date:_____

BID OPPORTUNITY NO. 712-2013

LOCATION APPROVED
UNDERGROUND STRUCTURES

SUPV. U/G STRUCTURES COMMITTEE — DATE

NOTE:
LOCATION OF UNDERGROUND STRUCTURES AS SHOWN ARE BASED ON THE BEST INFORMATION AVAILABLE. BUT NO GUARANTEE IS GIVEN THAT ALL EXISTING UTILITIES ARE SHOWN OR THAT THE GIVEN LOCATIONS ARE EXACT. CONFIRMATION OF EXISTENCE AND EXACT LOCATION OF ALL SERVICES MUST BE OBTAINED FROM THE INDIVIDUAL UTILITIES BEFORE PROCEEDING WITH CONSTRUCTION.

B.M.
ELEV.

NO.	REVISIONS	DATE	BY
1	ISSUED FOR ADDENDUM	14/01/14	
0	ISSUED FOR TENDER	13/10/15	SRG

AECOM

DESIGNED BY	CL	CHECKED BY	
DRAWN BY	SRG	APPROVED BY	
HOR. SCALE:	AS NOTED	RELEASED FOR CONSTRUCTION BY:	
VERTICAL:	AS NOTED		
DATE		DATE	

ENGINEER'S SEAL

CONSULTANT DRAWING NO.
60273041-SHT-01-Con3- P-1002

Winnipeg

THE CITY OF WINNIPEG
PUBLIC WORKS DEPARTMENT

PLESSIS ROAD TWINNING AND GRADE SEPARATION AT CN REDDITT SUBDIVISION
CONTRACT 3

CITY DRAWING NUMBER
U238-2014-2372

SHEET 2 OF 5

PUMPING STATION

PROCESS MECHANICAL
STANDARD DETAILS

P-1002

A1 – 841x594
2013-10-11
AECOM REVIEW | DRFT CHK
_AECOMKND_DEFAULT.CTB