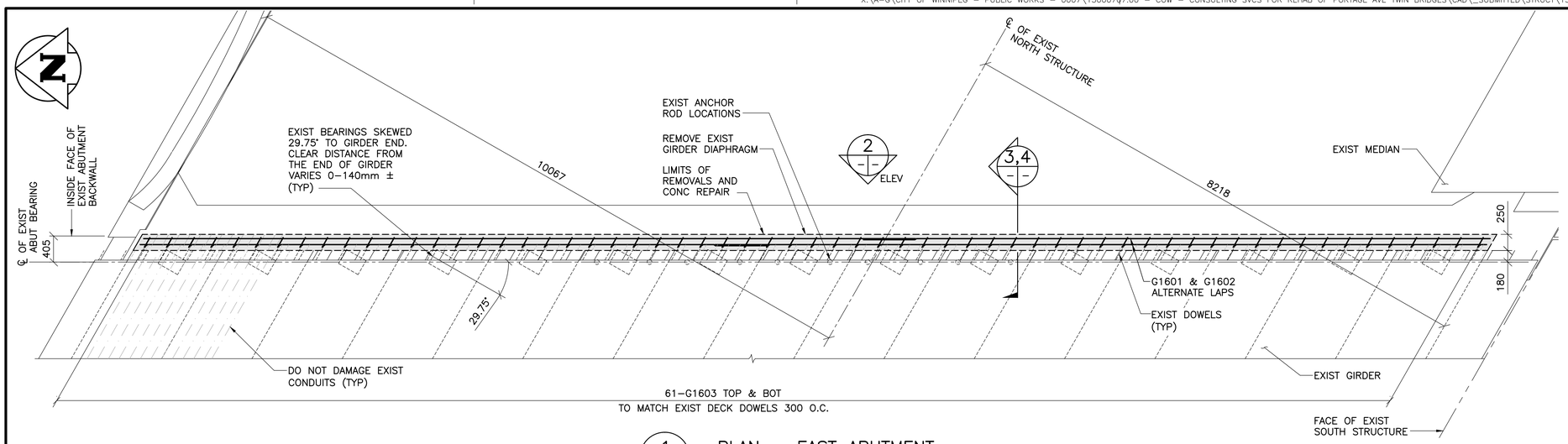

1 PLAN – EAST ABUTMENT

1 : 40

– EXIST REINFORCING SHOWN BASED ON RECORD DRAWINGS
– EXIST WEST ABUTMENT SIMILAR

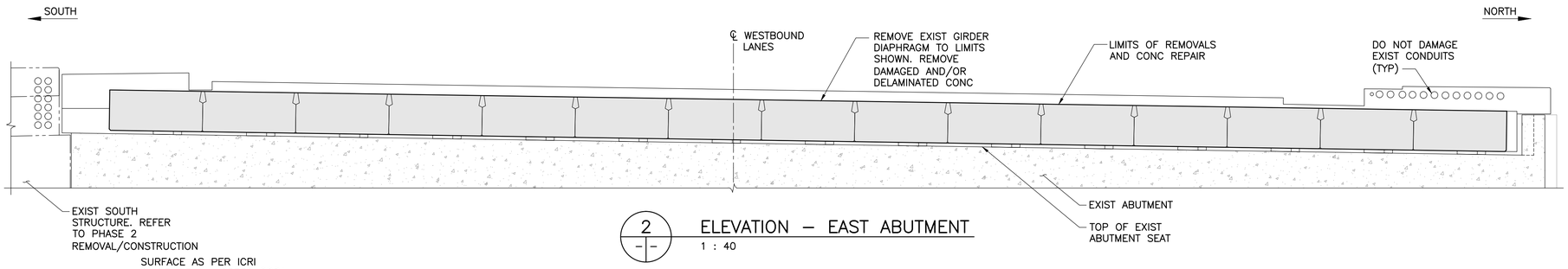

2 ELEVATION – EAST ABUTMENT

1 : 40

GIRDER END REMOVALS AND REPAIR NOTES:

1. GIRDER END REMOVAL AREAS SHALL BE CONFIRMED BY THE CONTRACT ADMINISTRATOR. REMOVALS AND REPAIRS SHALL TAKE PLACE AT BOTH THE EAST AND WEST ABUTMENTS. UPON REMOVAL OF EXISTING ABUTMENT BACKWALLS, THE CONTRACT ADMINISTRATOR SHALL CONFIRM THE EXTENT OF GIRDER DETERIORATION. FULL DEPTH REPAIRS AS SHOWN IN SECTION 3, HAVE BEEN ASSUMED FOR THE EXTENT OF WORK, AS THE CURRENT CONDITION OF THE GIRDERS CANNOT BE ASSESSED. IF THE CONDITION OF THE GIRDERS IS LESS DETERIORATED THAN ANTICIPATED, PARTIAL DEPTH REPAIRS SHALL BE UNDERTAKEN AS DIRECTED BY THE CONTRACT ADMINISTRATOR. PARTIAL DEPTH REPAIRS SHALL CONSIST OF REMOVALS TO THE MID HEIGHT OF THE FIRST LAYER OF REINFORCING STEEL.
2. REMOVE EXISTING GIRDER CONCRETE BY MEANS OF HYDRODEMOLITION, OR METHODS APPROVED BY THE CONTRACT ADMINISTRATOR. CONCRETE SHALL BE REMOVED TO THE LIMITS SHOWN, AS DIRECTED BY THE CONTRACT ADMINISTRATOR TO EXPOSE RUST–FREE EXISTING REINFORCING STEEL AND REMOVE ALL UNSOUND CONCRETE. CARE SHALL BE TAKEN TO AVOID DAMAGE TO THE EXISTING PRESTRESSING STRANDS AND REINFORCING STEEL.
3. WHERE PARTIAL DEPTH REPAIR IS REQUIRED:
   - CONCRETE SHALL BE REMOVED TO A MAXIMUM DEPTH OF THE MID HEIGHT OF THE FIRST LAYER OF REINFORCING STEEL AND PRESTRESSING STRANDS.
   - ALL REINFORCING EXPOSED AND DISTURBED FROM THE REPAIR PROCESS SHALL BE FULLY EXPOSED AS IF THE REPAIR WAS A FULL DEPTH REPAIR.
   - ALL REINFORCING SHALL BE CLEANED OF RUST, SCALE, AND OTHER BOND INHIBITING MATERIALS USING AN ABRASIVE FREE OF CORROSION PRODUCING AGENTS.
   - SAND ABRASIVES ARE RECOMMENDED. SLAB ABRASIVE SHALL BE LESS THAN 0.1% OIL BY MASS.
   - REPLACE ALL DAMAGED REINFORCING STEEL AS DIRECTED BY THE CONTRACT ADMINISTRATOR.
4. REPAIR GUIDELINES SHALL BE IN ACCORDANCE WITH ICRI NO. 03730 AND NO. 03731.
5. REPAIR AREAS SHALL BE EXTENDED TO A SIMPLE LAYOUT WITH SQUARE CORNERS.
6. ALL REINFORCING STEEL SHALL BE CLEANED OF RUST, SCALE, AND OTHER BOND INHIBITING MATERIALS USING AN ABRASIVE FREE OF CORROSION PRODUCING AGENTS. SAND ABRASIVES ARE RECOMMENDED. SLAB ABRASIVES SHALL BE LESS THAN 0.1% OIL BY MASS.
7. REPLACE ALL DAMAGED REINFORCING STEEL, AS DIRECTED BY THE CONTRACT ADMINISTRATOR.
8. FOLLOWING THE COMPLETION OF CONCRETE REMOVALS, THE CONTRACTOR SHALL NOTIFY THE CONTRACT ADMINISTRATOR TO INSPECT THE WORK.
9. FOLLOWING THE REMOVAL OF CONTAMINATED CONCRETE AND CONDITIONING OF THE REINFORCING STEEL, ABRASIVES SHALL BE USED TO REMOVE BOND INHIBITING MATERIALS FROM THE REPAIRED AREA(S) AND TO OPEN THE PORES OF THE EXISTING CONCRETE FOR REPAIR.
10. ATTACH GALVANODE DAS ANODES TO CLEAN REINFORCING STEEL IN ACCORDANCE WITH THE MANUFACTURER'S RECOMMENDED METHODS. GALVANODE DAS ANODES SHALL BE INSTALLED IN IN THE LOCATIONS SHOWN ON THE DRAWINGS. THE ANODES SHALL BE SECURED TO PREVENT DISPLACEMENT DURING PLACING AND CONSOLIDATION OF CONCRETE.
11. MINIMUM AMBIENT AIR TEMPERATURES DURING REPAIR WORK SHALL BE ABOVE 5°C.
12. TYPE 1 CONCRETE SHALL BE USED.
13. A BOND SHALL BE CREATED BETWEEN THE NEW CONCRETE MORTAR AND THE EXISTING SUBSTRATES. EXISTING CONCRETE SHALL BE SATURATED SURFACE DRY UPON APPLICATION OF BONDING GROUT. MORTAR SHALL BE APPLIED BY TROWELLING, PUMPING, SPRAYING, OR INTO FORMS ENSURING THAT ALL ENTRAPPED AIR IS REMOVED.
14. UNIFORM CONCRETE SURFACES SHALL BE COVERED AND KEPT MOIST BY MEANS OF WET CURING BLANKETS FOR SEVEN (7) CONSECUTIVE DAYS IMMEDIATELY FOLLOWING FINISHING OPERATIONS AND SHALL BE MAINTAINED ABOVE 5°C FOR AT LEAST SEVEN (7) CONSECUTIVE DAYS THEREAFTER. THE USE OF CURING COMPOUND SHALL NOT BE PERMITTED.
15. ALL REPAIRED AREAS SHALL BE INSPECTED BY THE CONTRACT ADMINISTRATOR FOR BOND PRIOR TO ACCEPTANCE.

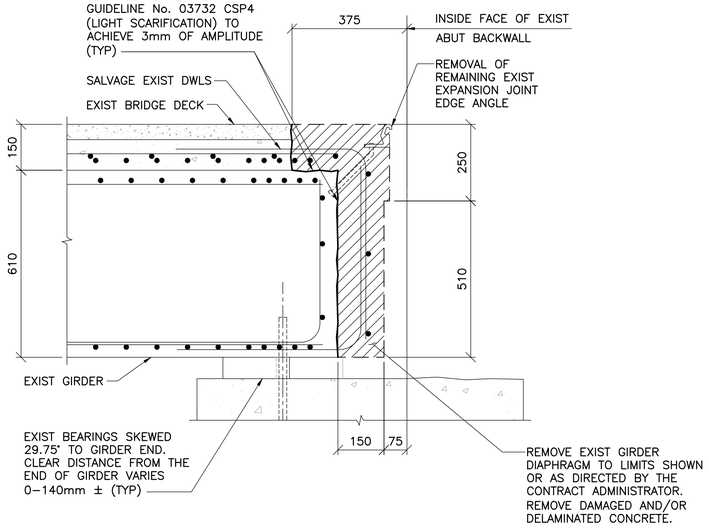

3 SECTION GIRDER END REMOVALS

1 : 10

– EXIST EAST ABUTMENT SHOWN, EXIST WEST ABUTMENT SIMILAR
– REFER TO SHEET 9 AND 10 FOR EXIST ABUTMENT REMOVAL DETAILS

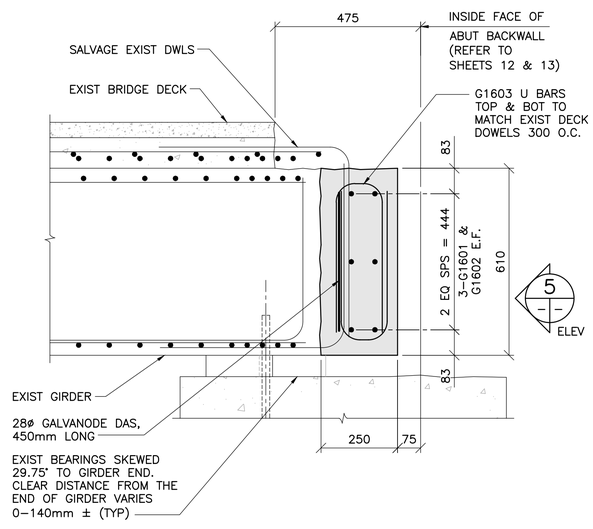

4 SECTION GIRDER END REPAIR

1 : 10

– EXIST EAST ABUTMENT SHOWN, EXIST WEST ABUTMENT SIMILAR

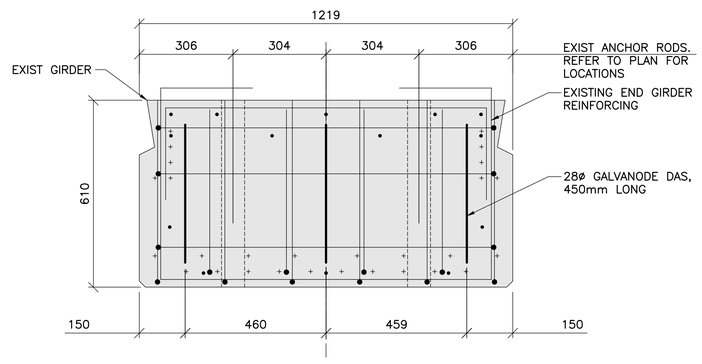

5 EXIST GIRDER END ELEVATION REPAIR

1 : 10

APEGM
Certificate of Authorization
TETRA TECH WEI Inc.
No. 5313 Date: April 30, 2014

NO.	REVISIONS	DATE	BY
0	ISSUED FOR TENDER	13.12.09	V.B.

B.M. ELEV. F.B.

TETRA TECH

DESIGNED BY	K.Y.	CHECKED BY	V.B.
DRAWN BY	E.V.	APPROVED BY	E.F.S.
HOR. SCALE: / VERTICAL:	AS NOTED	RELEASED FOR CONSTRUCTION	DATE
		ORIGINAL SIGNED	13.12.09
DATE	13.07.18	D. BURMEY, P.ENG. BRIDGE PROJECTS ENGINEER	

PROVINCE OF MANITOBA
ORIGINAL SIGNED 13.12.09
V. BANTHIA
Member 23477
REGISTERED PROFESSIONAL ENGINEER

CONSULTANT DRAWING NO.
1300070700–DWG–S0011

Winnipeg

THE CITY OF WINNIPEG
PUBLIC WORKS DEPARTMENT
ENGINEERING DIVISION

PORTAGE AVENUE TWIN BRIDGES
OVER STURGEON CREEK
REHABILITATION AND RELATED WORKS

PHASE 1 REMOVALS
GIRDER END REMOVAL AND REPAIR
SECTIONS AND DETAILS

CITY DRAWING NUMBER: B178–14–011
SHEET 11 OF 70
11