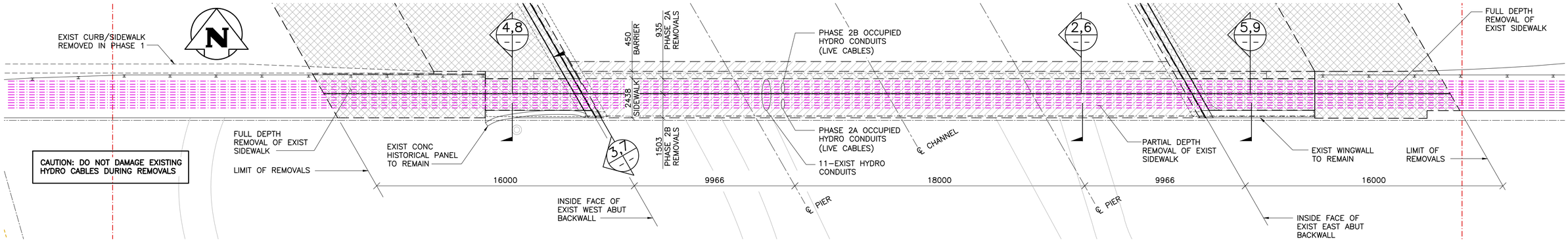

1 PARTIAL PLAN – REMOVALS PHASE 2A & 2B
1 : 125

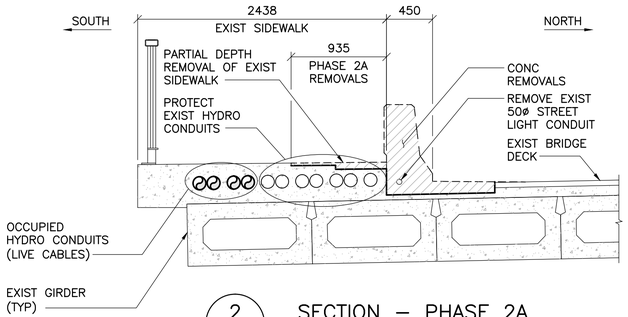

2 SECTION – PHASE 2A
1 : 30

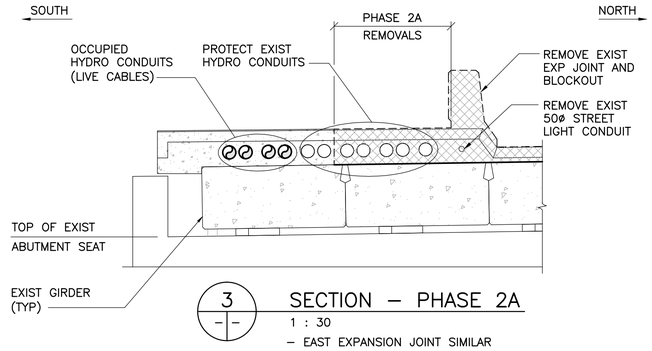

3 SECTION – PHASE 2A
1 : 30
– EAST EXPANSION JOINT SIMILAR

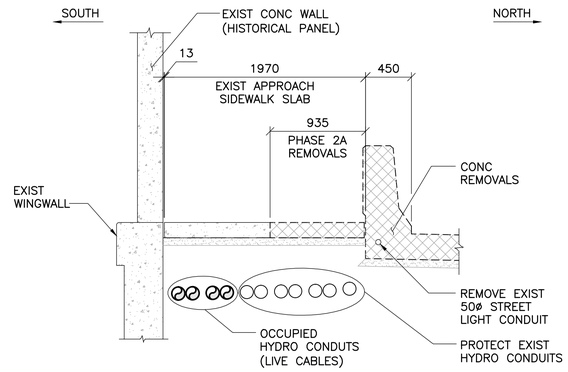

4 SECTION – PHASE 2A
1 : 30

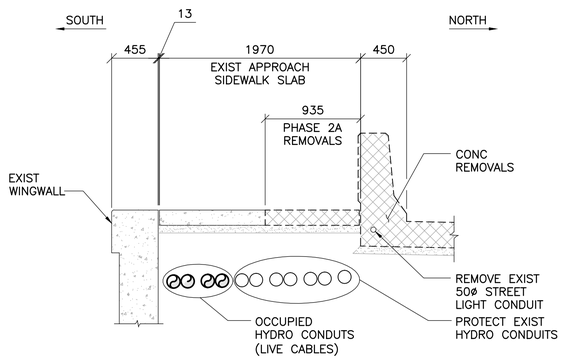

5 SECTION – PHASE 2A
1 : 30

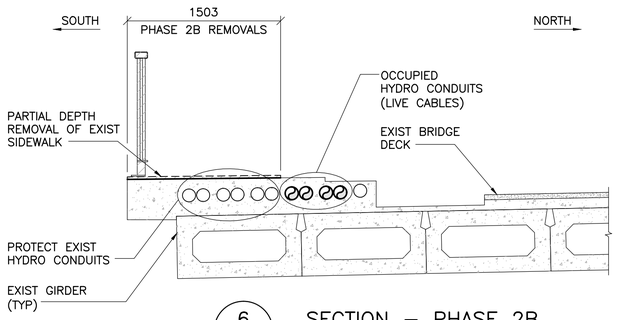

6 SECTION – PHASE 2B
1 : 30

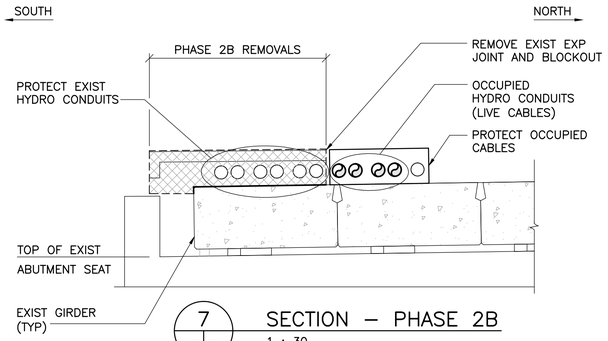

7 SECTION – PHASE 2B
1 : 30
– EAST EXPANSION JOINT SIMILAR
– INSTALL TEMPORARY PROTECTION OVER OCCUPIED CABLES

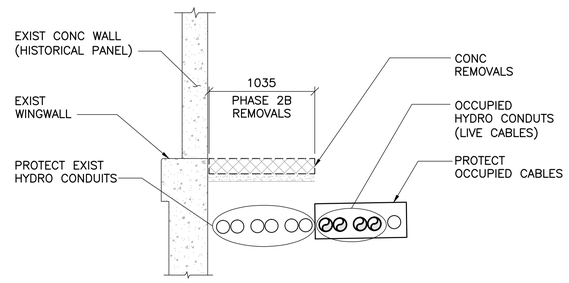

8 SECTION – PHASE 2B
1 : 30
– INSTALL TEMPORARY PROTECTION OVER OCCUPIED CABLES

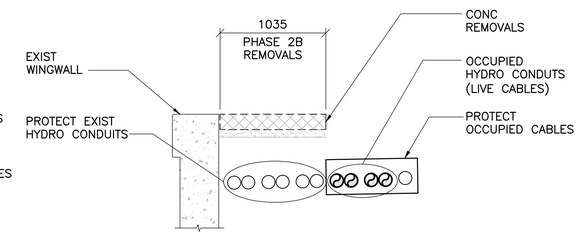

9 SECTION – PHASE 2B
1 : 30
– INSTALL TEMPORARY PROTECTION OVER OCCUPIED CABLES

NOTES:

1. THIS DRAWING SHOWS THE REMOVAL STAGES BETWEEN THE SIDEWALK, THE EXPANSION JOINT BLOCKOUT AND THE APPROACH SIDEWALK SLAB. ABUTMENT BACKWALL REMOVALS SHALL TAKE PLACE AS SHOWN ON SHEET 38.
2. MANITOBA HYDRO HAS FOUR LIVE CABLES THAT ARE TO REMAIN OPERATIONAL DURING CONSTRUCTION. RELOCATION OF THE CABLES WILL BE REQUIRED BETWEEN PHASES 2A AND 2B. THESE CABLES AS SHOWN IN PHASES 2A AND 2B ARE LIVE AND SHALL NOT BE DAMAGED DURING CONSTRUCTION.
3. CABLES WILL BE ORIENTED IN PHASE 2 CONFIGURATION AT THE START OF THE WORK.
4. THE CONTRACTOR SHALL INSTALL NEW CONDUIT AND EXPANSION ASSEMBLIES TO BE SPLICED TO THE EXISTING CONDUITS AND DUCT BANKS AS SHOWN ON SHEETS 49 AND 56 PRIOR TO COMMENCING PHASE 2B REMOVALS.
5. COORDINATE WITH MANITOBA HYDRO AS REQUIRED FOR SAFETY WATCHES AND TEMPORARY POWER SHUTDOWN DURING ABUTMENT BACKWALL REMOVALS ABOVE THE CONCRETE EXPANSION JOINT BLOCKOUT ENCASED WITH LIVE CABLES DURING PHASE 2A REMOVALS.
6. UPON COMPLETION OF PHASE 2A REMOVALS, THE CONTRACTOR SHALL PROVIDE TEMPORARY PROTECTION OVER EXISTING CABLES THAT WILL BE LIVE DURING PHASE 2B REMOVALS. PROTECTION SHALL BE A FOUR-SIDED PLYWOOD BOX, OR EQUIVALENT AS APPROVED BY THE CONTRACT ADMINISTRATOR.
7. THE CONTRACTOR SHALL COORDINATE ALL REMOVAL OPERATIONS WITH MANITOBA HYDRO AND SHALL MAKE ARRANGEMENTS TO HAVE CABLES RELOCATED TO PHASE 2B CONFIGURATION.
8. THE CONTRACTOR SHALL UNDERTAKE PHASE 2B REMOVALS FOLLOWING COMPLETION OF PHASE 2A REMOVALS, PROTECTION OF LIVE CONDUITS, AND RELOCATION OF MANITOBA HYDRO CABLES.
9. THE CONTRACTOR SHALL INSTALL NEW CONDUIT AND EXPANSION ASSEMBLIES AS SHOWN ON SHEETS 49 AND 56 PRIOR TO INSTALLING THE EXPANSION JOINT AND REINFORCING STEEL.
10. FOLLOWING COMPLETION OF PHASE 2A AND 2B REMOVALS, THE CONTRACTOR SHALL COORDINATE WITH MANITOBA HYDRO AS REQUIRED FOR SAFETY WATCHES AND TEMPORARY POWER SHUTDOWN FOR INSTALLATION OF THE EXPANSION JOINTS, CONSTRUCTION OF EXPANSION JOINT BLOCKOUTS INCLUDING REINFORCING STEEL AND CONCRETE. CONSTRUCTION SHALL BE ORGANIZED TO MINIMIZE POWER SHUTDOWN OF CABLES.

LEGEND:

PARTIAL DEPTH REMOVALS
FULL DEPTH REMOVALS
OCCUPIED CONDUIT
EMPTY CONDUIT
HYDRO DUCTS

APEGM
Certificate of Authorization
TETRA TECH WEI Inc.
No. 5313 Date: April 30, 2014

B.M. ELEV.		F.B.	
0	ISSUED FOR TENDER	13.12.09	V.B.
NO.	REVISIONS	DATE	BY

TETRA TECH

DESIGNED BY	D.M.	CHECKED BY	V.B.
DRAWN BY	E.V.	APPROVED BY	E.F.S.
HOR. SCALE: / VERTICAL:	AS NOTED	RELEASED FOR CONSTRUCTION	DATE
		ORIGINAL SIGNED	13.12.09
DATE	13.09.25	D. BURMEY, P.ENG. BRIDGE PROJECTS ENGINEER	

ORIGINAL SIGNED 13.12.09
V. BANTHIA
Member
23477

CONSULTANT DRAWING NO.
1300070700-DWG-S0041

Winnipeg

THE CITY OF WINNIPEG
PUBLIC WORKS DEPARTMENT
ENGINEERING DIVISION

PORTAGE AVENUE TWIN BRIDGES
OVER STURGEON CREEK
REHABILITATION AND RELATED WORKS

PHASE 2 REMOVALS – PHASING 2A & 2B
EXISTING HYDRO CONDUIT PHASING
PARTIAL PLAN AND SECTIONS

CITY DRAWING NUMBER
B178-14-041
SHEET 41 OF 70
41