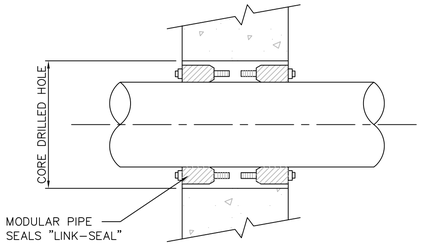

TABLE OF "LINK-SEAL" SERIES FOR STEEL PIPE
(FOR OTHER SIZES SEE SUPPLIER'S TABLES)

STEEL PIPE		WALL SLEEVE	LINK-SEAL	
SIZE	ACTUAL O.D.mm	I.D.mm	LINKS/ SEAL	MODEL NO.
13	21.3	52.5	4	LS-200-C
20	26.7	62.7	5	LS-275-C
25	33.4	62.7	5	LS-200-C
32	42.2	77.9	7	LS-275-C
38	48.3	90.1	5	LS-300-C
50	60.3	102.3	6	LS-300-C
75	89.0	128.2	8	LS-300-C
100	114.3	154.1	10	LS-300-C
125	141.3	202.7	6	LS-425-C
150	168.3	254.5	7	LS-400-C
200	219.1	304.8	12	LS-475-C

APPLICATION NOTES:
1. CONCRETE WALL
2. STEEL, STAINLESS STEEL, DUCTILE IRON, PVC OR FRP PIPE; NON–INSULATED.
3. CONDITION
   a) DRY TO DRY
   b) INTERIOR TO UNDERGROUND

1 – WALL/ FLOOR PENETRATION
NTS

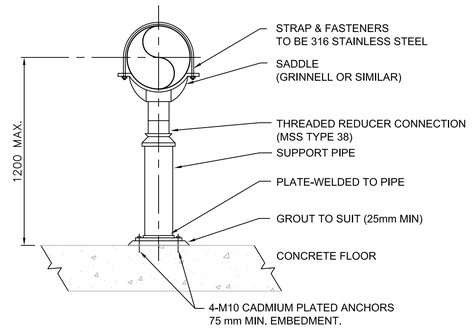

PIPE SIZE (mm)	SUPPORT PIPE (mm)	PLATE SIZE (mm)
50	38	150 X 150 X 9.5
75	50	250 X 250 X 9.5
100	75	250 X 250 X 9.5
150	100	250 X 250 X 9.5
200	150	250 X 250 X 9.5
250	200	300 X 300 X 9.5

2 – ADJUSTABLE PIPE SUPPORT WITH SADDLE
NTS

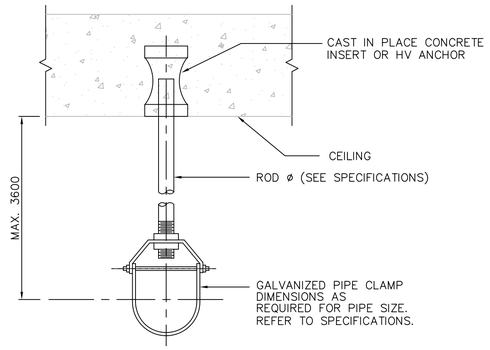

PIPE SIZE (mm)	ROD SIZE (mm)	MAX LOAD (kg)
25	9.4	280
50	9.4	280
75	12.0	510
100	16.0	800
150	20.0	1230
200	22.0	1710
250	25.0	2250
300	25.0	2250
350	25.0	2250
400	25.0	2250
450	25.0	2250
500	32.0	3630
600	32.0	3630

GRINNELL OR SIMILAR

SAFETY FACTOR = 5

3 – SINGLE PIPE HANGER
NTS

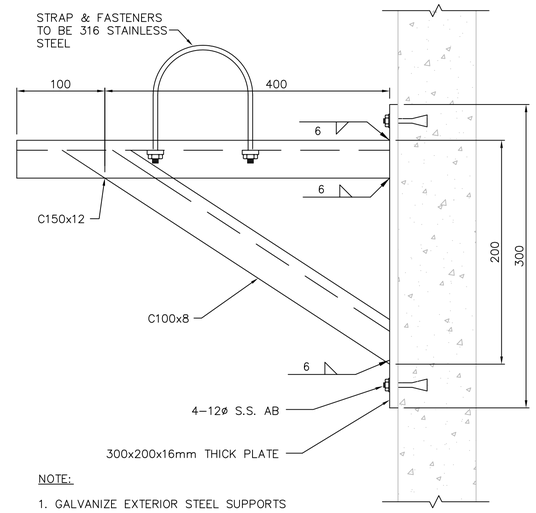

NOTE:
1. GALVANIZE EXTERIOR STEEL SUPPORTS
2. PROVIDE PIPE STRAPPING AS REQUIRED.

4 – WALL MOUNTED PIPE SUPPORT
NTS

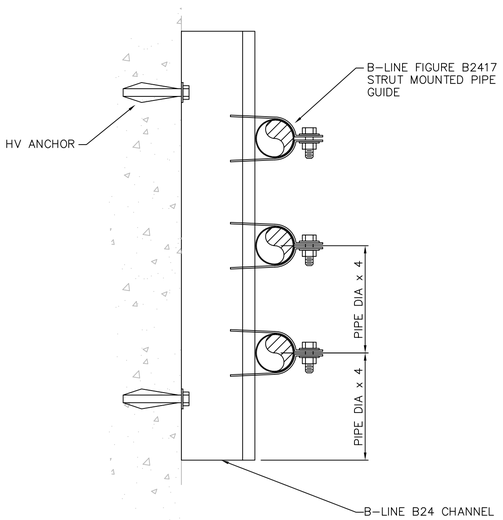

WALL MOUNTING FOR PIPES 50mm AND LESS

5 – SMALL PIPING WALL MOUNTED PIPE SUPPORT
NTS

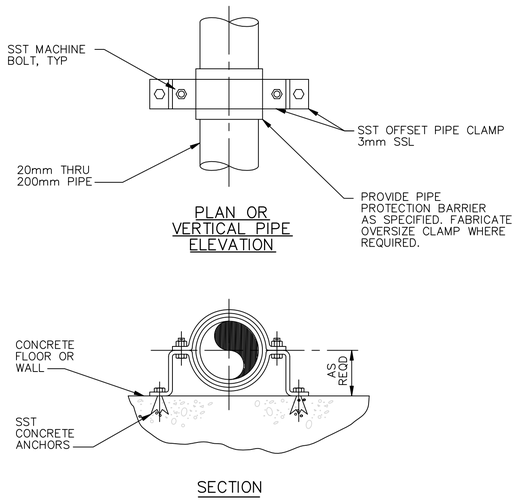

NOTES :
1 ALL DIMENSIONS IN MILLIMETERS, UNLESS OTHERWISE NOTED.

6 – WALL MOUNTED PIPE SUPPORT
NTS

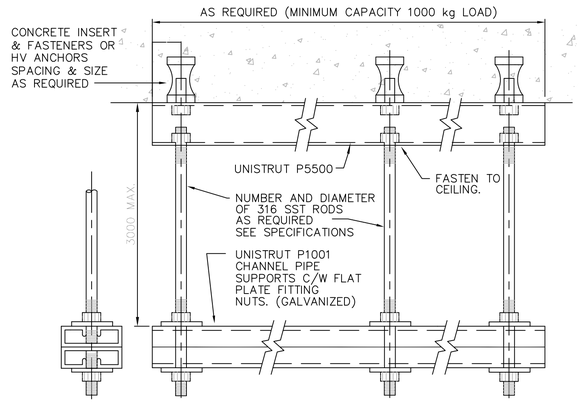

	PIPE SIZES ON RACK	ROD SIZE REQUIRED
600mm SPACING	150mm AND SMALLER 300mm AND SMALLER	9mm 12mm
900mm SPACING	100mm AND SMALLER 200mm AND SMALLER 300mm AND SMALLER	9mm 12mm 19mm
1200mm SPACING	75mm AND SMALLER 150mm AND SMALLER 200mm AND SMALLER 300mm AND SMALLER	9mm 12mm 16mm 19mm

NOTE: 1. MAXIMUM SPACING = 1200mm 2. MINIMUM SAFETY FACTOR = 3

7 – MULTI–PIPE HANGER
NTS

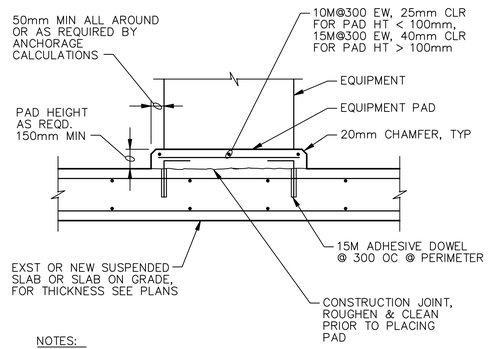

NOTES:
1. WHEN ANCHORAGE OF EQUIPMENT TO PAD IS REQUIRED, USE CONCRETE ANCHORS SPECIFIED.
2. CONCRETE PADS FOR ELECTRICAL EQUIPMENT SHALL BE 90mm HIGH, UNLESS NOTED OTHERWISE.

8 – EQUIPMENT PAD
NTS

APEGM
Certificate of Authorization
CH2M HILL Canada Ltd.
No. 1441 Date: 2015 01 26

B.M.
ELEV.

CONSTRUCTION COMPLETION DATE: YYYY MM DD

NO.	REVISIONS	DATE	BY
1	ISSUED FOR BID OP. 1068–2014	15/01/23	JBC
0	ISSUED FOR TENDER	14/06/13	JBC

CH2MHILL®

DESIGNED BY	KG	CHECKED BY	BW
DRAWN BY	JBC	APPROVED BY	BW
SCALE: HORIZONTAL	NTS	RELEASED FOR CONSTRUCTION	
VERTICAL	–		
DATE	2014 06 13	DATE	

PLOT DATE: 2015 01 26

ENGINEER'S SEAL
PROVINCE OF MANITOBA
B.W. WILLIAMSON
Member
22736
15/01/26
REGISTERED PROFESSIONAL ENGINEER

CONSULTANT DRAWING NUMBER
WX–M0501

BID OPPORTUNITY: 1068–2014

Winnipeg
THE CITY OF WINNIPEG
WATER AND WASTE DEPARTMENT
ENGINEERING DIVISION

CITY OF WINNIPEG WATER TREATMENT RESEARCH AND PROCESS OPTIMIZATION FACILITY
PROCESS
STANDARD DETAILS
SHEET 1 OF 2

SHEET X OF X
CITY DRAWING NUMBER
1–0601X–M0008–001–01

FILE PATH: \\WINNIPEG\Proj\WinnipegCityof\462784Waterworks\DMS\DLV\
FILE NAME: 462784–M–0501.dwg