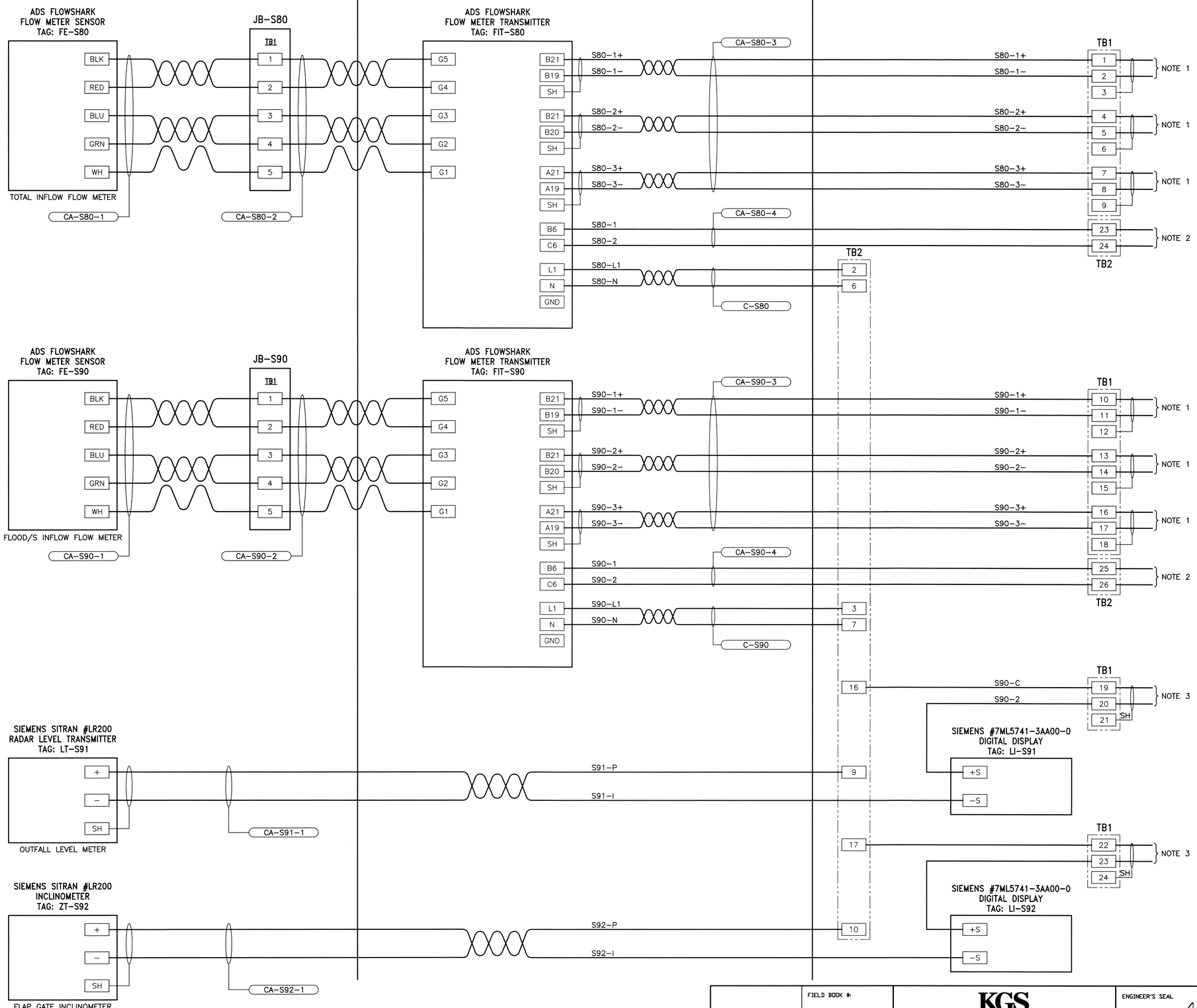

NOTES:

1. REFER TO DRAWING 1-0139F-A0014-001 (D-E28) FOR ADDITIONAL DETAILS.
2. REFER TO DRAWING 1-0139F-A0013-001 (D-E27) FOR ADDITIONAL DETAILS.
3. REFER TO DRAWING 1-0139F-A0018-001 (D-E32) FOR ADDITIONAL DETAILS.

APEGM
Certificate of Authorization
KGS Group
No. 245

FIELD BOOK #:

POSTED TO LBIS

NO.	REVISIONS	DATE	BY
0	ISSUED FOR CONSTRUCTION	14/12/15	AP

KGS GROUP
CONSULTING ENGINEERS

DESIGNED BY	DAL	CHECKED BY	
DRAWN BY	BGO	APPROVED BY	
HOR. SCALE	N.T.S.	RELEASED FOR CONSTRUCTION	
VERTICAL			
DATE	2014 12 12	DATE	

ENGINEER'S SEAL
PROVINCE OF MANITOBA
C.W.B. PAWLIKEWICH
Member
23259
REGISTERED PROFESSIONAL ENGINEER

D-E41.2

Winnipeg
THE CITY OF WINNIPEG
WATER AND WASTE DEPARTMENT

FLOOD PUMPING STATION UPGRADES
DUMOULIN STATION
ELECTRICAL
CSO OUTFALL MONITORING

SHEET 2 OF 2
CITY DRAWING NUMBER
1-0139F-E0006-002

CW-9-M564-1

FileName: P:\Projects\2013\13-0107-026\Dwg\Elec\13-0107-026-D-E41.2.dwg – Tab: D-E41.2 Plotted By: DDeroche 12/15/2014 [Mon 12:58pm]