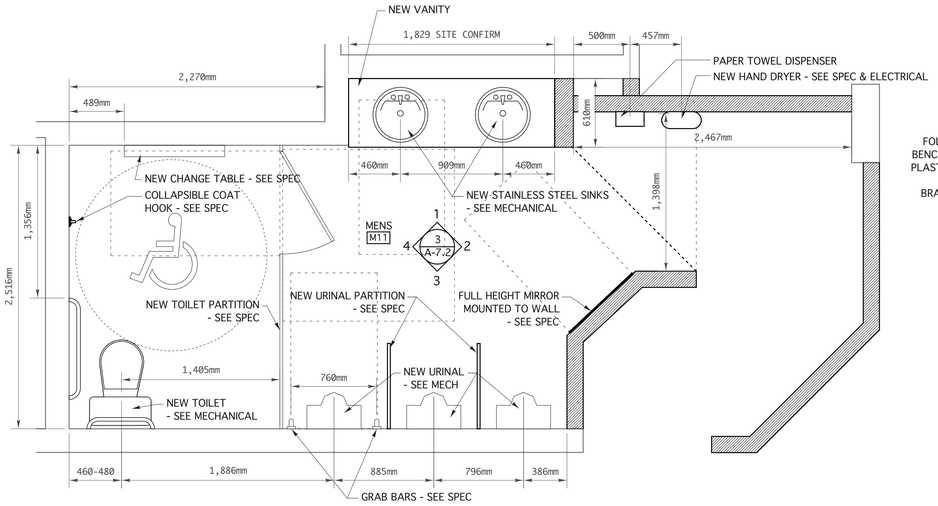

1 A-7.2 ENLARGED MENS WASHROOM PLAN
SCALE 1:25

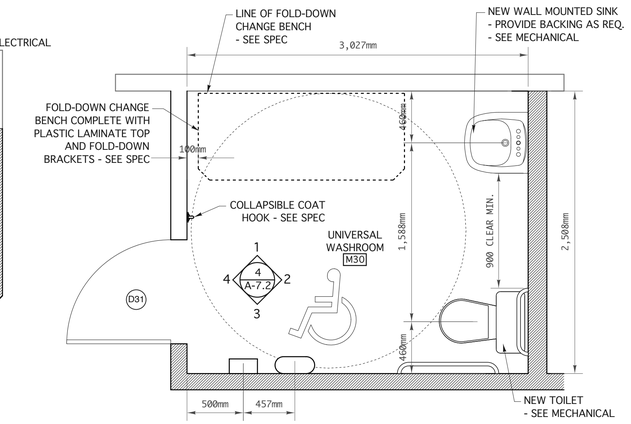

2 A-7.2 ENLARGED UNIVERSAL WASHROOM PLAN
SCALE 1:25

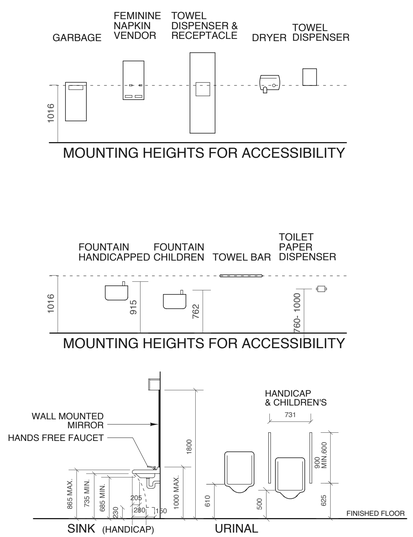

5 A-7.2 WASHROOM STANDARDS
SCALE 1:50

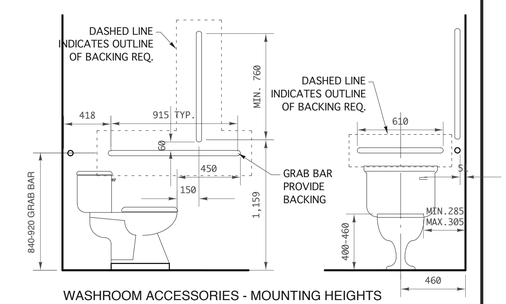

WASHROOM ACCESSORIES - MOUNTING HEIGHTS

6 A-7.2 HANDICAP REQUIREMENTS
SCALE 1:20

NOTE: PROVIDE BACKING IN WALL BEHIND ALL BATHROOM ACCESSORIES AS REQUIRED INCLUDING GRAB BARS, WALL MOUNTED SINK, MIRROR, SHELF, TOILET PAPER HOLDER, FEMININE NAPKIN DISPOSAL ET.C - TYPICAL.

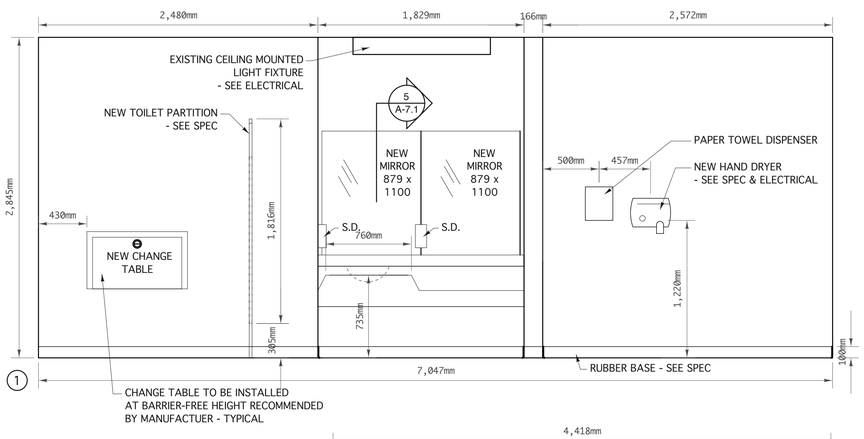

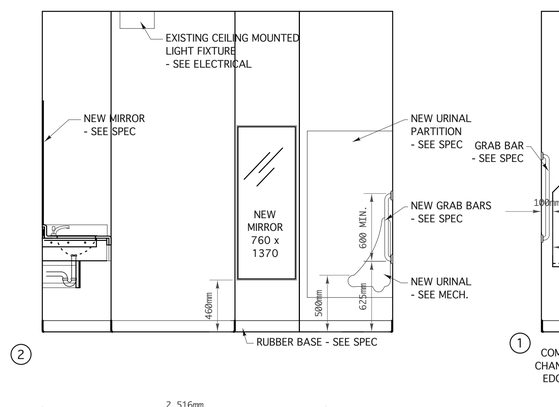

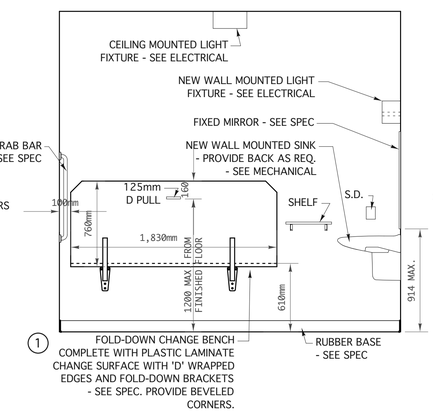

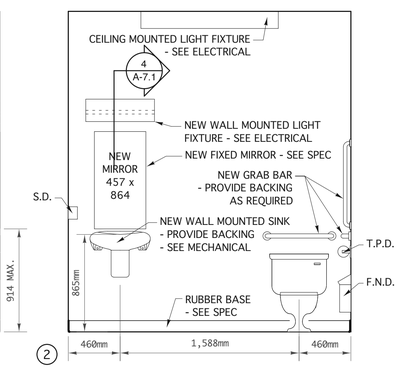

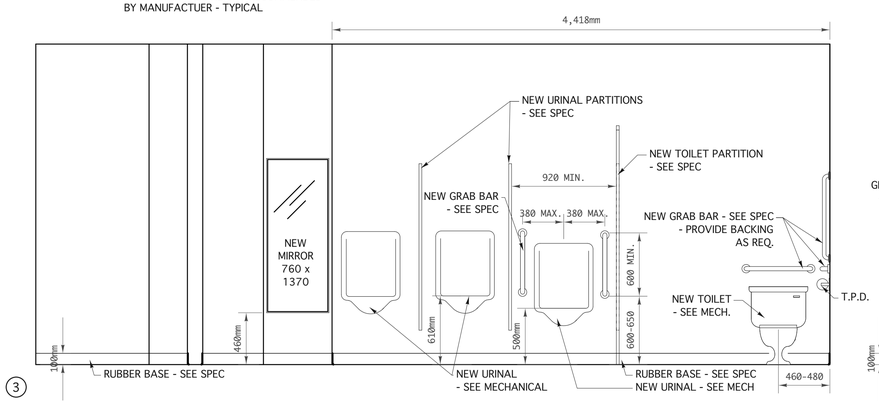

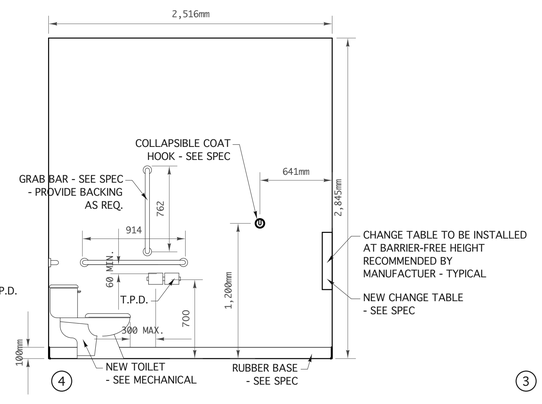

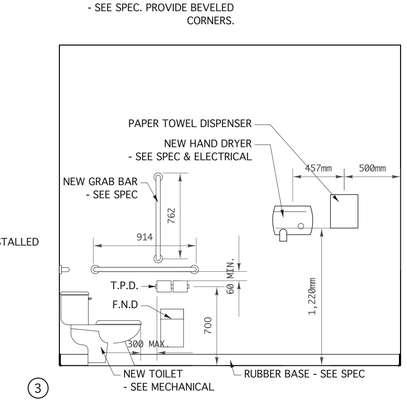

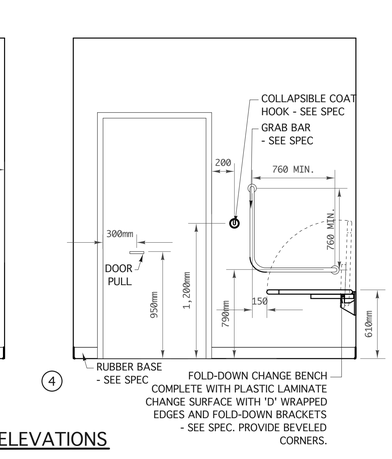

3 A-7.2 MENS WASHROOM M11 ELEVATIONS
SCALE 1:25

NOTE: TOILET PAPER, PAPER TOWEL, SOAP AND HAND SANITIZER DISPENSERS WILL BE SUPPLIED BY OWNER. GENERAL CONTRACTOR TO INSTALL - TYPICAL THROUGHT THE FACILITY.

4 A-7.2 UNIVERSAL WASHROOM M30 ELEVATIONS
SCALE 1:25

revision

The drawings, specifications, revisions, addendums, and clarifications, must be read as a whole. Errors and omissions due to separation of the documents by the general contractor become the responsibility of the same.

This drawing must not be scaled.

The general Contractor must verify all dimensions, datums and levels prior to commencement of work. All errors and omissions must be reported immediately to the Architect.

Variations and modifications to work shown on this drawing shall not be carried out without written permission from the Architect.

harold funk architect inc.

Harold Funk Architect Inc.
Architecture and Urban Design

401-55 Donald Street, Winnipeg, Manitoba R3C 1L8
T (204) 943-5087 info@funkarchitect.com
F (204) 949-9231 funkarchitect.com

project

WESTON MEMORIAL COMMUNITY CENTRE - RENOVATION PROJECT
WINNIPEG, MANITOBA

sheet title

ENLARGED WASHROOM PLANS & ELEVATIONS

BID OPPORTUNITY #: 824-2014

project number:	14-004	**drawing number:**
scale:	AS SHOWN	A-7.2
drawn by:	J.R.	
approved by:	H.F.	
date:	SEPT. 30, 2014	