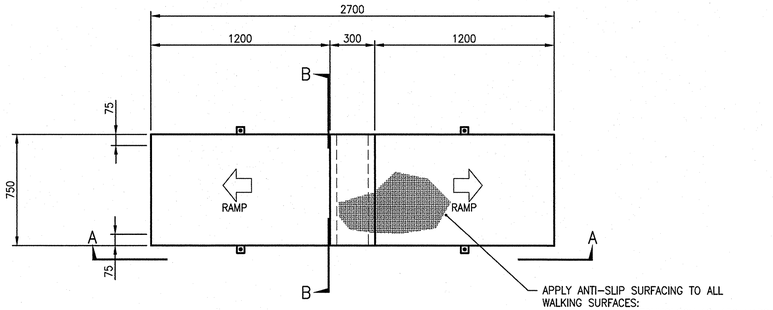

PIPE WALKOVER PLAN

SCALE: 1:20

NOTES:

1. G40.21-300W STEEL 6mm THICK UNLESS OTHERWISE NOTED.
2. ALL WELDING, CUTTING, FORMING AS PER MANUFACTURER'S RECOMMENDATIONS.
3. ALL WELDING TO CWB/CSA, W59 REQUIREMENTS BY FABRICATOR CERTIFIED TO W47.1.
4. SMOOTHEN/ROUND OFF ALL CORNERS AND EXPOSED EDGES.
5. ALL NON-WALKING SURFACES TO BE COATED SAFETY YELLOW AS PER SECTION 09 87 00.

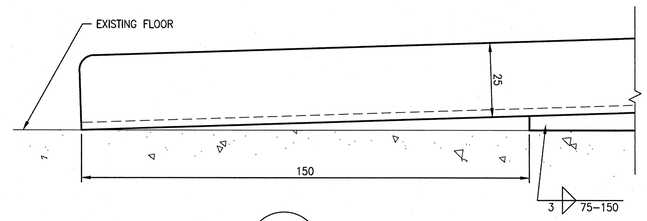

1 / M0009 DETAIL

SCALE 1:1

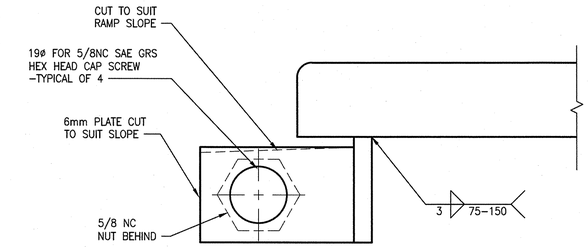

2 / M0009 DETAIL

SCALE 1:1

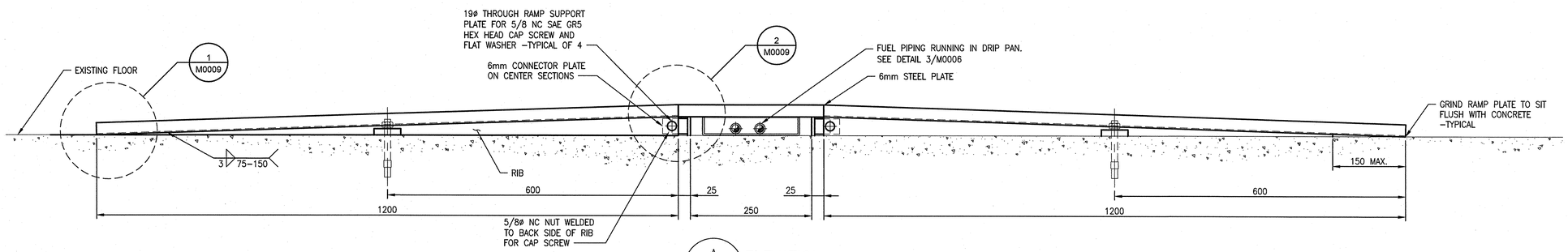

A / M0009 ELEVATION

SCALE 1:5

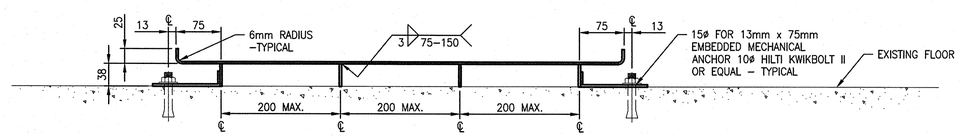

B / M0009 SECTION

SCALE 1:5

BID OPPORTUNITY NO. 231-2015

DRAWING NUMBER	REFERENCE DRAWINGS

AECOM REVIEW | DRFT CHK

AECOM FILE NAME: M0009.dwg Saved By: landersd

PLOT: 15/04/09 12:37:41 PM

D SIZE 22" x 34" (559mm x 864mm)

APEGM
Certificate of Authorization
AECOM Canada Ltd.
No. 4671 Date: Apr 9/15

LOCATION APPROVED
UNDERGROUND STRUCTURES

SUPR. U/G STRUCTURES COMMITTEE DATE

NOTE:
LOCATION OF UNDERGROUND STRUCTURES AS SHOWN ARE BASED ON THE BEST INFORMATION AVAILABLE. BUT NO GUARANTEE IS GIVEN THAT ALL EXISTING UTILITIES ARE SHOWN OR THAT THE GIVEN LOCATIONS ARE EXACT. CONFIRMATION OF EXISTENCE AND EXACT LOCATION OF ALL SERVICES MUST BE OBTAINED FROM THE INDIVIDUAL UTILITIES BEFORE PROCEEDING WITH CONSTRUCTION.

NO.	REVISIONS	YY/MM/DD	BY
0	ISSUED FOR TENDER, BID OPP. 231-2015	15/04/13	DRL

AECOM

DESIGNED BY	CC	CHECKED BY	GD
DRAWN BY	DRL	APPROVED BY	
HOR. SCALE	AS NOTED	RELEASED FOR CONSTRUCTION	
VERT. SCALE			
DATE		DATE	

PROFESSIONAL'S SEAL
PROVINCE OF MANITOBA
Apr 9/15
C.A.D. COURCHAINE
REGISTERED PROFESSIONAL ENGINEER

CONSULTANT DRAWING NO.
M0009

Winnipeg

THE CITY OF WINNIPEG
WATER AND WASTE DEPARTMENT

SHOAL LAKE
INTAKE FUEL STORAGE AND DELIVERY SYSTEM REHABILITATION

MECHANICAL

PIPE WALKOVER
PLAN, SECTION, ELEVATION AND DETAILS

SHEET 17 OF 23

CITY DRAWING NUMBER: 1-0600A-M0009-001

REV: 0