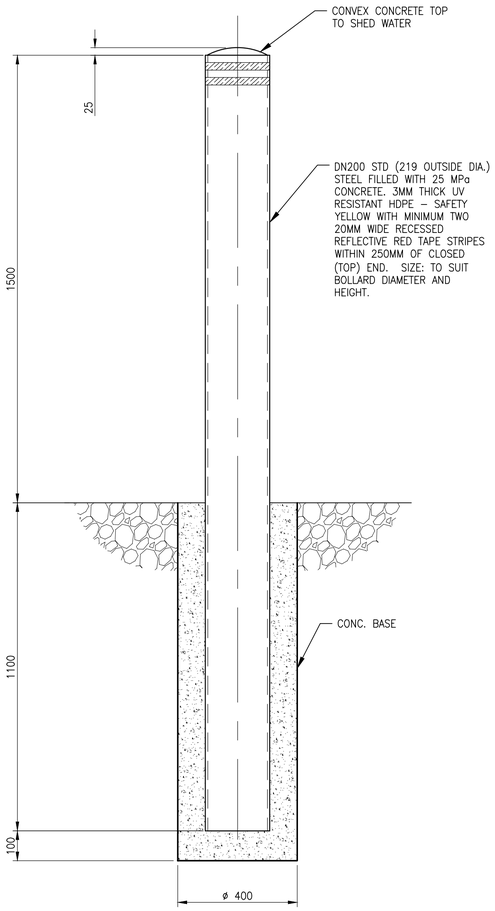

1 S0003 BOLLARD DETAIL – TYPE A
SCALE 1:10

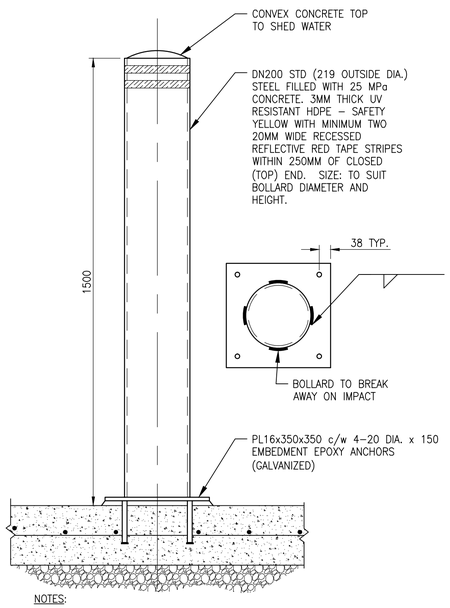

NOTES:

1. DRILL EPOXY ANCHORS AFTER SLAB POUR.
2. PLATE TO BE WELDED TO BOLLARD IN SHOP.

2 S0003 BOLLARD DETAIL – TYPE B
SCALE 1:10

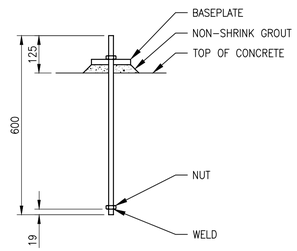

3 S0003 TYPICAL ANCHOR ROD
SCALE 1:10

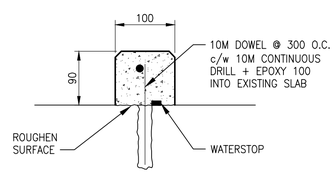

4 S0003 INDOOR CONTAINMENT CURB
SCALE 1:5
SEE M0004 NOTE 14.

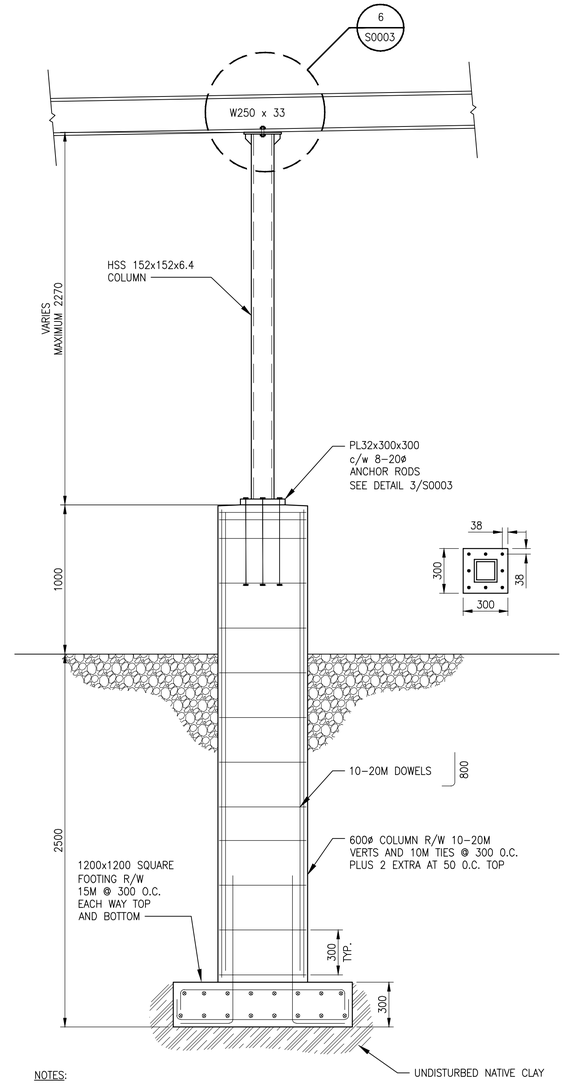

NOTES:

1. ALL EXPOSED STEEL TO BE GALVANIZED.
2. TAPER TOP OF 600ø CONCRETE BASE AWAY FROM BASEPLATE.
3. BACKFILL WITH NON–FROST SUSCEPTIBLE MATERIAL AS DIRECTED BY THE GEOTECHNICAL ENGINEER.

5 S0003 PIPE SUPPORT DETAIL
SCALE 1:20

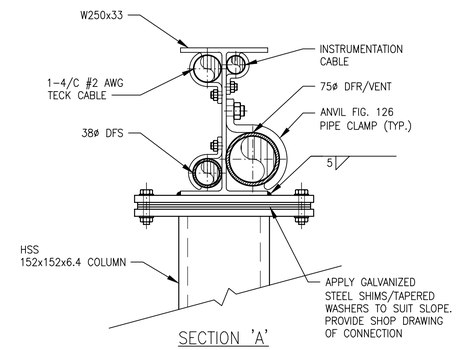

SECTION 'A'

NOTES:

1. PROVIDE PIPE SUPPORT LAYOUT SHOWING SECTION AND DIMENSIONS OF FUEL PIPING AND ELECTRICAL CABLE FOR CONTRACT ADMINISTRATOR'S REVIEW.
2. PROVIDE PIPE SUPPORT AS PER SPEC SECTION 23 05 29 PIPE HANGER SUPPORTS.

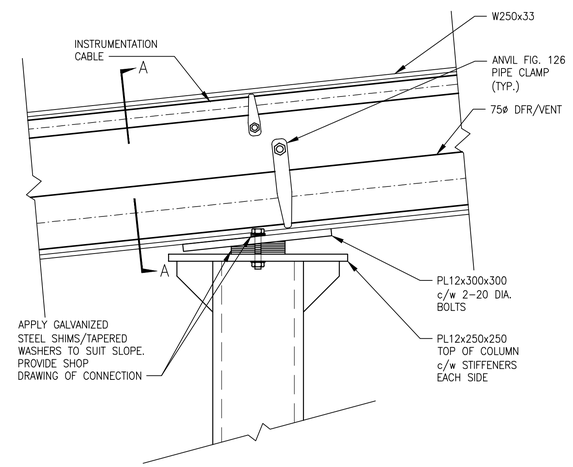

SIDE VIEW

6 S0003 PIPE SUPPORT–TOP CONNECTION
SCALE 1:5

GENERAL NOTES

1. ALL UTILITIES IN AREA OF EXCAVATION TO BE LOCATED; SOFT DIG TO CONFIRM UTILITIES.

BID OPPORTUNITY NO. 231-2015

DRAWING NUMBER	REFERENCE DRAWINGS
1-0600A-M0008-001-00	MECHANICAL- DIESEL AND GASOLINE FUEL SYSTEMS PROFILE AND SECTION
1-0600A-M0003-001-00	MECHANICAL - PUMPHOUSE AND GATEHOUSE DEMOLITION PLANS
1-0600A-M0002-001-00	MECHANICAL - DIESEL AND GASOLINE FUEL TANK LAYOUT
1-0600A-S0002-001-00	STRUCTURAL - DIESEL AND GASOLINE FUEL TANK SLAB AND SECTIONS
1-0600A-S0001-001-00	STRUCTURAL - GENERAL NOTES AND ABBREVIATIONS

AECOM REVIEW | DRFT CHK

AECOM FILE NAME: S0003.dwg Saved By: landersd

PLOT: 15/04/01 9:32:26 AM

D SIZE 22" x 34" (559mm x 864mm)

APEGM
Certificate of Authorization
AECOM Canada Ltd.
No. 4671 Date: 1-APR-2015

LOCATION APPROVED
UNDERGROUND STRUCTURES
SUPR. U/G STRUCTURES COMMITTEE — DATE

NOTE:
LOCATION OF UNDERGROUND STRUCTURES AS SHOWN ARE BASED ON THE BEST INFORMATION AVAILABLE. BUT NO GUARANTEE IS GIVEN THAT ALL EXISTING UTILITIES ARE SHOWN OR THAT THE GIVEN LOCATIONS ARE EXACT. CONFIRMATION OF EXISTENCE AND EXACT LOCATION OF ALL SERVICES MUST BE OBTAINED FROM THE INDIVIDUAL UTILITIES BEFORE PROCEEDING WITH CONSTRUCTION.

NO.	REVISIONS	YY/MM/DD	BY
0	ISSUED FOR TENDER, BID OPP. 231-2015	15/04/13	DRL

AECOM

DESIGNED BY	LT/CC	CHECKED BY	CG
DRAWN BY	DRL	APPROVED BY	
HOR. SCALE	AS NOTED	RELEASED FOR CONSTRUCTION	
VERT. SCALE			
DATE		DATE	

PROFESSIONAL'S SEAL
PROVINCE OF MANITOBA
C. J. CENTRUP
Member
21688
REGISTERED PROFESSIONAL ENGINEER
CONSULTANT DRAWING NO.
S0003

Winnipeg

THE CITY OF WINNIPEG
WATER AND WASTE DEPARTMENT

SHOAL LAKE
INTAKE FUEL STORAGE AND DELIVERY SYSTEM REHABILITATION
STRUCTURAL
TANK SLAB DETAILS

SHEET 4 OF 22
CITY DRAWING NUMBER
1-0600A-S0003-001
REV 0