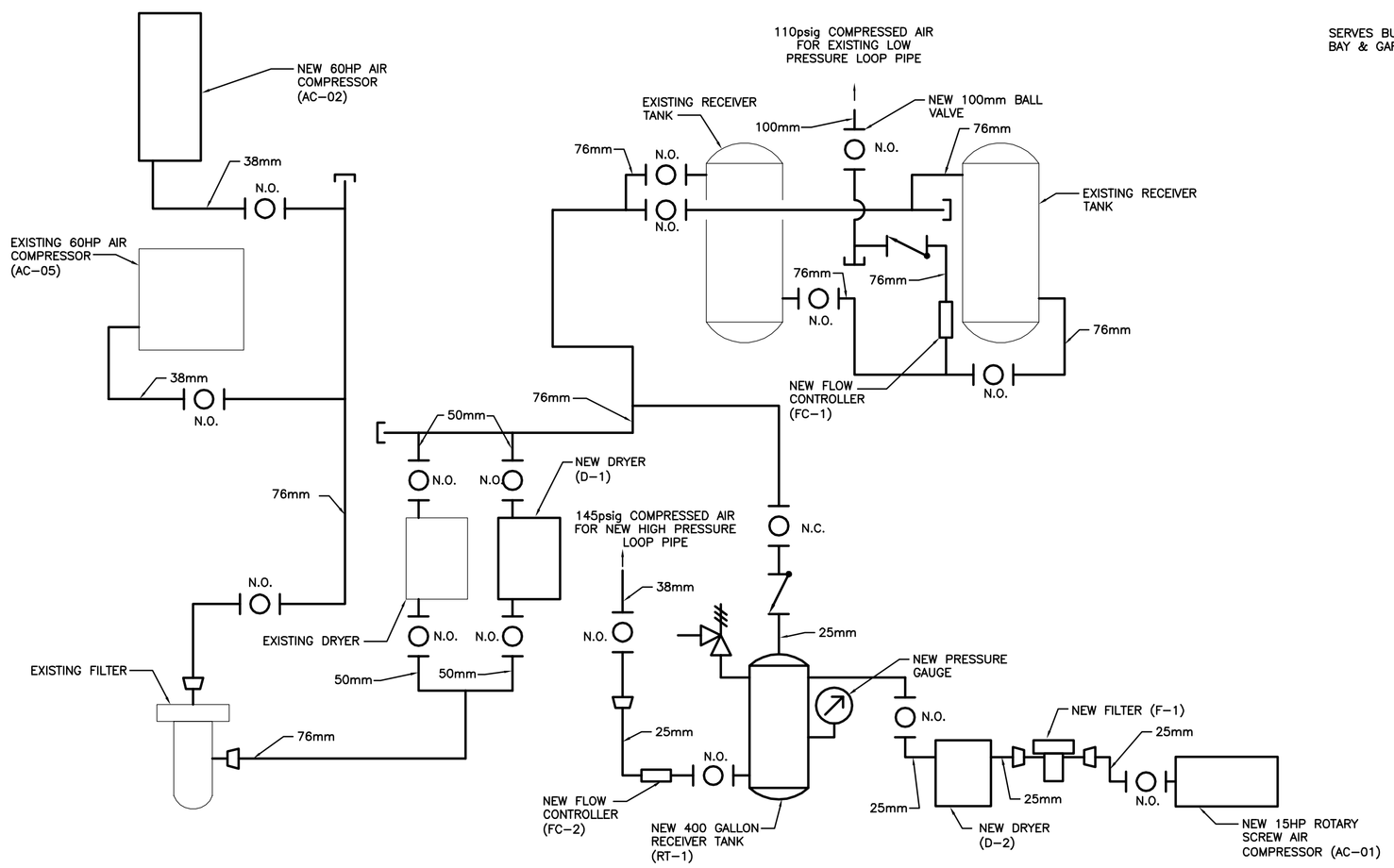

COMPRESSED AIR PIPING SCHEMATIC
NTS

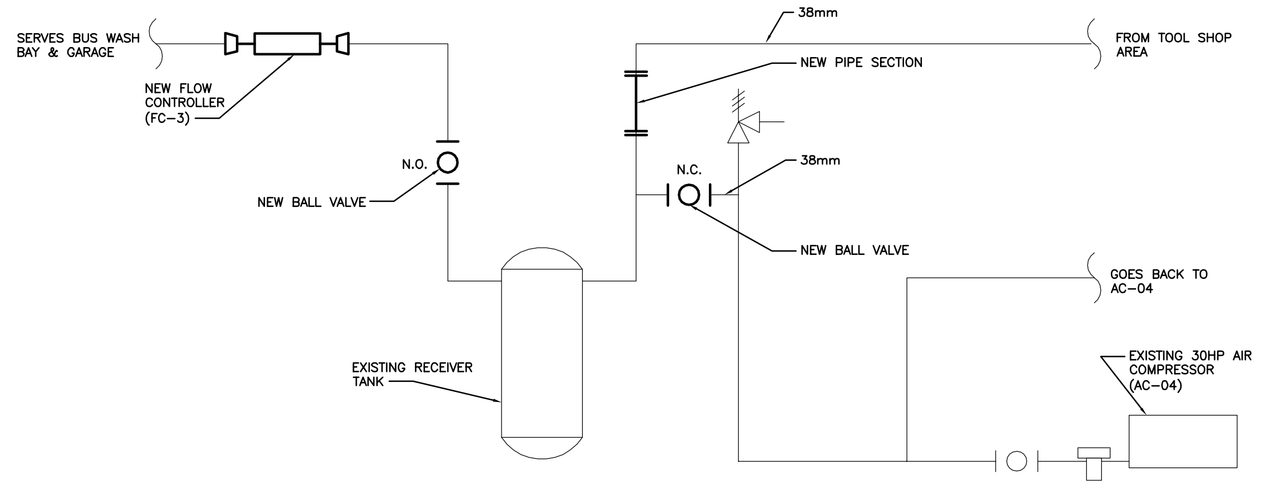

EXISTING COMPRESSED AIR PIPING SCHEMATIC FOR AC-04 & RECEIVER TANK
NTS

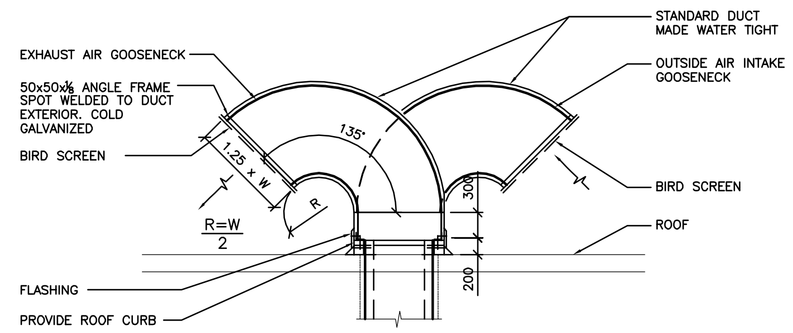

DETAIL - GOOSENECK ON ROOF
NTS

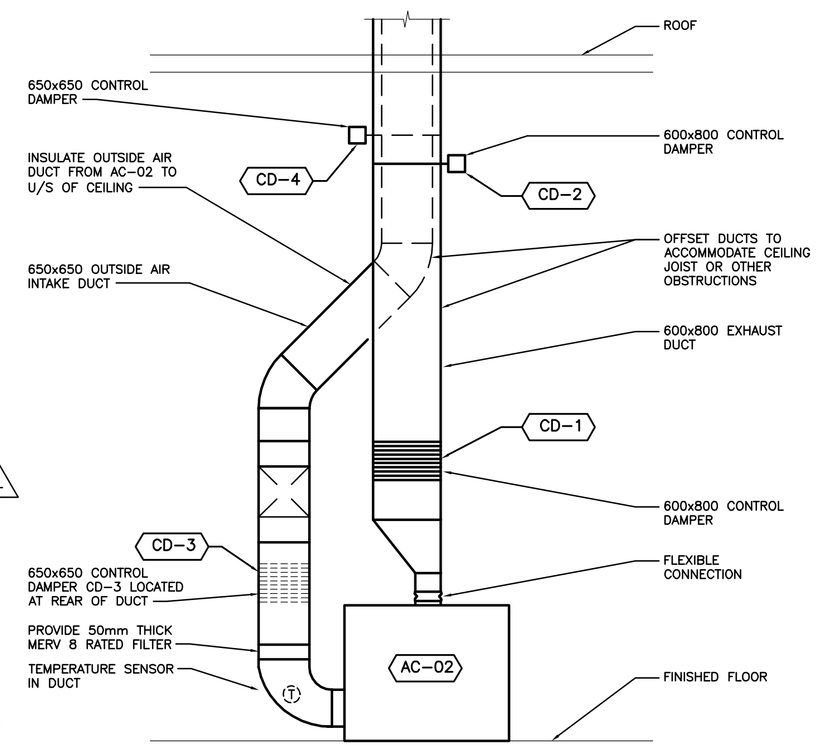

AC-02 COOLING SYSTEM DETAIL
1:50

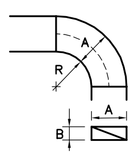

IF ASPECT RATIO B/A IS LESS THAN 0.5 INSTALL SPLITTER

R=A PREFERRED IF SPACE AVAILABLE – IN NO CASE SHALL R BE LESS THAN 0.5A

RADIUS ELBOW

RECTANGULAR SHEET METAL FITTING
NTS

4

AC-01 SEQUENCE OF OPERATION

1. AC-01 SHALL OPERATE ON A START/STOP BASIS.
2. PRESSURE SETTINGS:
   - DISCHARGE PRESSURE TARGET @ FLOW CONTROL: 140 psi (ADJUSTABLE)
   - UNLOAD PRESSURE: 175 psi (ADJUSTABLE)
   - LOAD PRESSURE: 145 PSI (ADJUSTABLE)
3. UNLOAD TIME SET AT 2 MINUTES TO MAXIMIZE ENERGY SAVINGS.

CONTROLS CONTRACTOR SHALL BE RESPONSIBLE FOR SPECIFYING ALL CONTROL WIRING AND CONTROLS TO MEET THE SEQUENCE OF OPERATION.

EQUIPMENT SCHEDULE

AC-01

4 INGERSOLL RAND MODEL UP6-15C-210 (120 GALLON TANK MOUNT) @ 210 PSIG RATED DISCHARGE PRESSURE, 15HP ROTARY SCREW AIR COMPRESSOR, 575V/3ø. INSTALL AS PER MANUFACTURER'S INSTRUCTIONS.

AC-02

INGERSOLL RAND MODEL R45N, 261 CFM (MAX. SPEED) @ 110 PSIG RATED DISCHARGE PRESSURE 60HP VARIABLE SPEED ROTARY SCREW AIR COMPRESSOR, 575V/3ø, C/W XE-145M CONTROLLER. INSTALL AS PER MANUFACTURER'S INSTRUCTIONS.

D-1

INGERSOLL RAND MODEL NVC300 CYCLING AIR DRYER, 300 CFM CAPACITY, R-404A REFRIGERANT, 575V/3ø, 230 PSIG MAX. OPERATING PRESSURE. INSTALL AS PER MANUFACTURER'S INSTRUCTIONS.

5 APPROVED SUBSTITUTE: KAESER MODEL TD76 AND GARDNER DENVER MODEL RES360.

D-2

4 INGERSOLL RAND MODEL D85ECA CYCLING AIR DRYER, 50 CFM CAPACITY, R-134A REFRIGERANT, 115V/1ø. INSTALL AS PER MANUFACTURER'S INSTRUCTIONS.

F-1

INGERSOLL RAND MODEL F108IG GENERAL PURPOSE LINE FILTER, 64 CFM CAPACITY, 250 PSIG MAX. OPERATING PRESSURE. INSTALL AS PER MANUFACTURER'S INSTRUCTIONS.

5 APPROVED SUBSTITUTE: KAESER MODEL KFS100.

FC-1

PNEUMATECH CONSERVAIR MODEL S-150 INTERMEDIATE CONTROL, MAX. FLOW: 750 CFM, MAX. INLET PRESSURE: 200 PSIG, MAX. OUTLET PRESSURE: 195 PSIG. INSTALL AS PER MANUFACTURER'S INSTRUCTIONS.

FC-2

PNEUMATECH CONSERVAIR MODEL S-30 INTERMEDIATE CONTROL, MAX. FLOW: 150 CFM, MAX. INLET PRESSURE: 200 PSIG, MAX. OUTLET PRESSURE: 195 PSIG. INSTALL AS PER MANUFACTURER'S INSTRUCTIONS.

FC-3

PNEUMATECH CONSERVAIR MODEL S-60 INTERMEDIATE CONTROL, MAX. FLOW: 250 CFM, MAX. INLET PRESSURE: 200 PSIG, MAX. OUTLET PRESSURE: 195 PSIG. INSTALL AS PER MANUFACTURER'S INSTRUCTIONS.

RT-1

PROVIDE A 400 GALLON COMPRESSED AIR RECEIVER TANK C/W PRESSURE RELIEF VALVE & PRESSURE GAUGE. INSTALL AS PER MANUFACTURER'S INSTRUCTIONS.

AUTOMATIC DRAIN VALVE

MONROE MD-25 ELECTRONIC DRAIN VALVE, ADJUSTABLE 'ON' TIME 0.5-10 SECONDS, ADJUSTABLE 'OFF' TIME 0.5-45 MINUTES, MAXIMUM WORKING PRESSURE 230PSI, SUPPLY VOLTAGE: 120VAC

AC-02 COOLING SYSTEM SEQUENCE OF OPERATION

1. WHEN AC-02 IS OFF, CONTROL DAMPER CD-1 & CD-3 ARE FULLY OPENED, AND CONTROL DAMPERS CD-2 & CD-4 ARE FULLY CLOSED. ALL FOUR CONTROL DAMPERS SHALL OPERATE IN UNISON.
2. WHEN AC-02 IS ENABLED, CONFIRM CONTROL DAMPERS CD-1 & CD-3 ARE FULLY OPENED, AND CONTROL DAMPERS CD-2 & CD-4 ARE FULLY CLOSED VIA END SWITCH.
3. MODULATE CONTROL DAMPERS CD-1, CD-2, CD-3 & CD-4 TO MAINTAIN MIXED AIR TEMPERATURE SET POINT ABOVE 20°C (ADJUSTABLE) AND BELOW 25°C (ADJUSTABLE) AS FOLLOWS:
   1. WHEN MIXED AIR TEMPERATURE IS ABOVE 25°C, MODULATE CONTROL DAMPERS CD-1 & CD-3 TOWARDS THE CLOSED POSITION, AND MODULATE CONTROL DAMPERS CD-2 & CD-4 TOWARDS THE OPEN POSITION.
   2. WHEN MIXED AIR TEMPERATURE IS BELOW 20°C, MODULATE CONTROL DAMPERS CD-1 & CD-3 TOWARDS THE OPEN POSITION, AND MODULATE CONTROL DAMPERS CD-2 & CD-4 TOWARDS THE CLOSE POSITION.
4. PROVIDE MIXED AIR TEMPERATURE LOW TEMPERATURE ALARM SET AT 2°C. ALARM & DISABLE AC-02.
5. PROVIDE MIXED AIR TEMPERATURE HIGH TEMPERATURE ALARM SET AT 38°C (ADJUSTABLE), ALARM & DISABLE AC-02.

CONTROLS CONTRACTOR SHALL BE RESPONSIBLE FOR SPECIFYING ALL CONTROL WIRING AND CONTROLS TO MEET THE SEQUENCE OF OPERATION.

AC-02 & AC-05 SEQUENCE OF OPERATION

1. AC-02 & AC-05 SHALL OPERATE ON A LEAD/LAG BASIS. OPERATE LEAD/LAG ON A WEEKLY BASIS (ADJUSTABLE).
2. WHEN THE LEAD COMPRESSOR CAN NOT KEEP UP WITH COMPRESSED AIR DEMAND, THEN ENERGIZE SECOND COMPRESSOR.
3. IF LEAD COMPRESSOR DOES NOT START, ALARM AND ENERGIZE SECOND COMPRESSOR. IF SECOND COMPRESSOR DOES NOT START, ALARM.
4. PRESSURE SETTINGS:
   - DISCHARGE PRESSURE TARGET: 110 PSI (ADJUSTABLE)
   - UNLOAD PRESSURE: 115 PSI (ADJUSTABLE)
   - LOAD PRESSURE: 95 PSI (ADJUSTABLE)
5. WHEN DISCHARGE PRESSURE EXCEEDS 120 PSI, STOP LEAD COMPRESSOR AND ALARM.

CONTROLS CONTRACTOR SHALL BE RESPONSIBLE FOR SPECIFYING ALL CONTROL WIRING AND CONTROLS TO MEET THE SEQUENCE OF OPERATION.

APEGM
Certificate of Authorization
Dillon Consulting Limited (MB)
No. 1789 Date: _____

LOCATION APPROVED UNDERGROUND STRUCTURES

SUPV. U/G STRUCTURES COMMITTEE DATE

NOTE:
LOCATION OF UNDERGROUND STRUCTURES AS SHOWN ARE BASED ON THE BEST INFORMATION AVAILABLE, BUT NO GUARANTEE IS GIVEN THAT ALL EXISTING UTILITIES ARE SHOWN OR THAT THE GIVEN LOCATIONS ARE EXACT. CONFIRMATION OF EXISTENCE AND EXACT LOCATION OF ALL SERVICES MUST BE OBTAINED FROM THE INDIVIDUAL UTILITIES BEFORE PROCEEDING WITH CONSTRUCTION.

B.M. ELEV.

NO.	REVISIONS	DATE	BY
5	ISSUED FOR ADDENDUM # 2	MAY. 5/15	EP
4	ISSUED FOR ADDENDUM #1	APR.24/15	PDT
3	ISSUED FOR CONSTRUCTION	APR.10/15	PDT
2	CLIENT REVIEW 100%	MAR.20/15	PDT
1	CLIENT REVIEW 99%	MAR.9/15	PDT
0	CLIENT REVIEW 66%	FEB.24/15	PDT

DESIGNED BY	EP
DRAWN BY	TKD
CHECKED BY	JVH
APPROVED BY	PDT
HOR. SCALE	NOTED
VERTICAL	NOTED
DATE	2015-02-20

DILLON CONSULTING

RELEASED FOR CONSTRUCTION

DATE

ENGINEER'S SEAL

DRAWING ORIGINALLY SIGNED BY P.D. TATARYN DATED APR. 10, 2015

CONSULTANT PROJECT NO. 149749

Winnipeg

THE CITY OF WINNIPEG
TRANSIT DEPARTMENT

FORT ROUGE GARAGE COMPRESSED AIR SYSTEM UPGRADE

CITY DRAWING NUMBER P-XXXX- ----

SHEET 4 OF 4

COMPRESSED AIR PIPING SCHEMATIC, DETAILS, EQUIPMENT SCHEDULE & SEQUENCE OF OPERATION

CONSULTANT DRAWING NUMBER M3

G:\CAD\149749 CITY OF WINNIPEG TRANSIT\07-MECHANICAL\01-CONTRACT\149749-07-MECH-DES.DWG