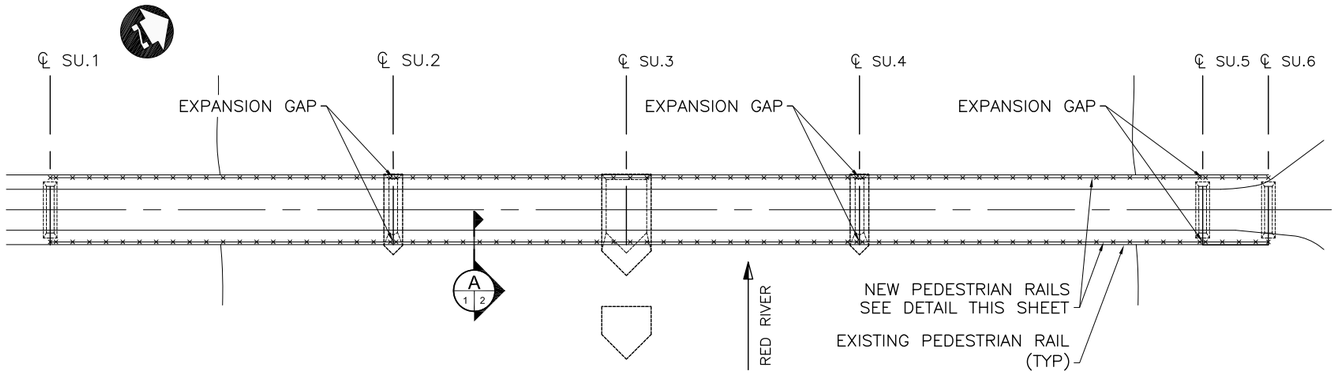

PLAN
NTS

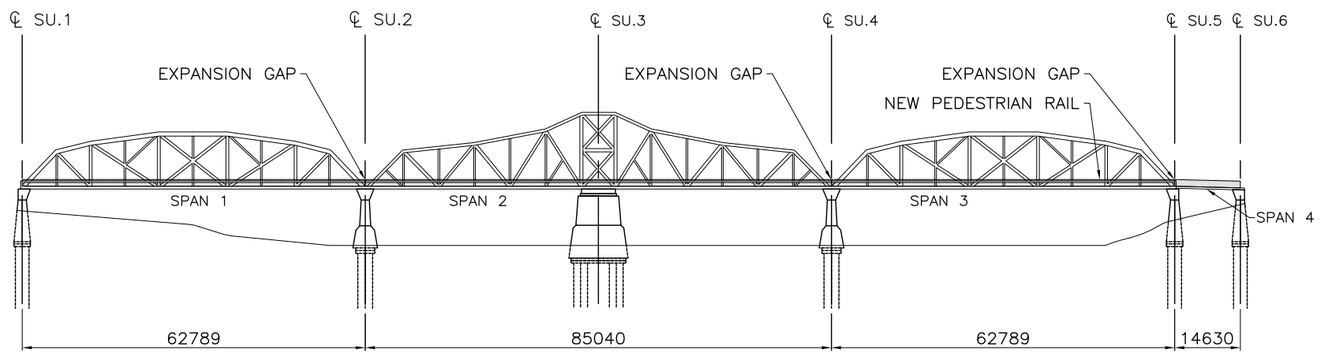

ELEVATION
NTS

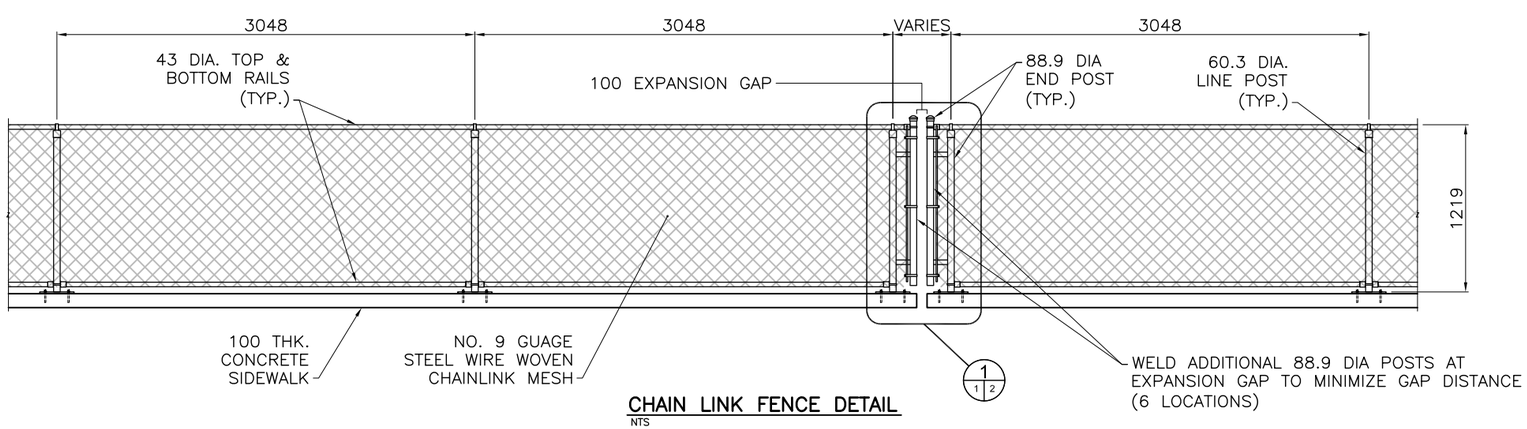

CHAIN LINK FENCE DETAIL
NTS

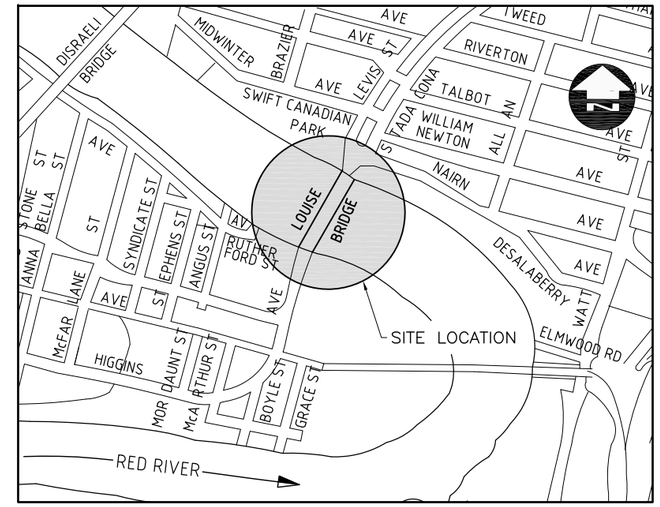

LOCATION PLAN

NOTES:

1. CHAINLINK FENCE SHALL BE FABRICATED IN ACCORDANCE WITH CITY OF WINNIPEG SPECIFICATION CW3550.
2. BASE PLATE STEEL SHALL BE IN ACCORDANCE WITH THE LATEST CSA STANDARD CAN/CSA G40.21M GRADE 300W OR EQUAL AND SHALL BE GALVANIZED.
3. HOT DIP GALVANIZING TO OCCUR AFTER WELDING.
4. ALL AREAS OF DAMAGED GALVANIZING SHALL BE REPAIRED IN ACCORDANCE WITH CITY OF WINNIPEG SPECIFICATION CW3550.

NOTE:

B.M
ELEV.

NO.	REVISION	DATE	BY
0	ISSUED FOR TENDER	03/27/15	J.G.W.

DESIGNED BY: D.M.
DRAWN BY: J.G.W.
CHECKED BY: D.M.
APPROVED BY: B.A.N.
AUTHORIZED BY:

ENGINEER'S SEAL
PROVINCE OF MANITOBA
D.E. MUHURDAREVIC
Member 31027
REGISTERED PROFESSIONAL ENGINEER

BID OPPORTUNITY NO.:
350-2015

CITY OF WINNIPEG
PUBLIC WORKS DEPARTMENT
ENGINEERING DIVISION

LOUISE BRIDGE:
SUPPLY AND INSTALLATION OF
SIDEWALK CHAIN LINK FENCE

SHEET 1 OF 2

HORIZONTAL: N.T.S.
VERTICAL: N.T.S.

PLAN, ELEVATION
& CHAIN LINK FENCE DETAIL

CITY DRAWING NUMBER:
B107-15-01

METRIC
WHOLE NUMBERS INDICATE MILLIMETRES
DECIMALIZED NUMBERS INDICATE METRES