Appendix C

HISTORICAL DRAWINGS

RIM EL. 230.659
EXIST. 600 mm W.M.
EXIST. 150 mm W.M.
EXIST. 600 mm L.D.S.
EXIST. 250 mm W.W.S.
EXIST. ℄ ROAD
EXIST. N. R.
EXIST. S. R.
FUTURE PROPOSED ROAD PROFILE AND PAYLINE
NEW 450 mm C.B. LEAD INV. EL. 223.416
INV. EL. 222.913
NEW 450 mm C.B. LEAD INV. EL. 223.034
NEW 900 mm L.D.S. INV. EL. 222.629
NEW INV. EL. 222.621
NEW INV. EL. 222.141
NEW 28.6 m LONG 900 mm L.D.S. AT 0.32% GRADE (AUGERED)
NEW MH.-S (STA. 1+067.684 (STA. 1+065.476 MAIN ST.)
B.C. STA. 1+040.045
E.C. STA. 1+13.565
NEW 165.125 m LONG 1800 mm L.D.S. AT 0.09 % GRADE (TUNNELED)
NEW INV. EL. 221.998
1+00
1+25
1+50
1+75
2+00
2+25
2+50
231.0
230.0
229.0
228.0
227.0
226.0
225.0
224.0
223.0
222.0
221.0
220.0

CAUTION GAS
CAUTION S.L.
EXIST. 150mm GAS
EXIST. S.L.
EXIST. 600mm W.M.
EXIST. 1370 mm SEWER
NEW 10.2 m LONG 250mm C.B. LEAD (AUGERED)
NEW 900mm L.D.S.
NEW 1800 mm L.D.S. SEE DWG. No. M-89-A-16
NEW 89 m LONG 250 mm C.B. LEAD (AUGERED)
EXIST. 300mm W.M.
EXIST. M.T.S.
5 STREET
71° 31' 10"
CAUTION W.M.
CAUTION GAS
CAUTION M.T.S.
A = 18° 26' 50"
R = 30.0 m
2.750
EXIST. 50 mm GAS
(TUNNELED) NEW 1800 mm L.D.S.
EXIST. 150 mm W.M.
ABANDONED EXIST. M.H.
ABANDONED EXIST. 600 mm L.D.S. & FILLED WITH BENTONITE SLURRY
EXIST. 250 mm W.W.S.
EXIST. 600 mm W.M.
NEW 10.9 m LONG 300 mm C.B. LEAD (AUGERED) CONNECTION DETAIL D-4 DWG. M-89-A-18
PROPOSED R.
NEW C.B. SD-225 INV. EL. 228.649 RIM EL. 230.250
NEW 300 mm C.B. LEAD SEE CONNECTION D-2 (DWG. M-89-A-18)
NEW C.B. SOUTH STA. 1+67.685
NEW C.B. NORTH STA. 1+65.026
2.0
1.00
EXIST. DITCH
NEW 1800 mm L.D.S. (TUNNELED)
ABANDONED EXIST. 600 mm L.D.S. & FILLED WITH BENTONITE SLURRY
ABANDONED EXIST. C.B. & M.H.
REGRADED EXIST. DITCH
REGRADED & INSTALLED NEW 600 mm C.M.P.
NEW C.B.- S.D.-225 INV. EL. 226.833 RIM EL. 230.609
INSTALLED 300 C.M.P. FROM C.B. TO DITCH + 2.0m TIGHT SHORE EXCAVATION FOR C.B. SHORING LEFT IN PLACE.
℄ 3.65 m ± SHAFT STA. 24+40
W.M. REPAIRED WITH 4.6m LENGTH OF 150mm ø P.V.C. & 2 - ROBAR COUPLINGS
2.750
0.914
3.600
14.327
3.658
4.600
220
212
208
MATCH LINE SEE DWG. NO. M-89-A-2
EXIST. 400 mm W.M.
REMOVED EXIST. C.M.P.
NEW 900 mm L.D.S.
ABANDON EXIST. C.B.
7.184
MAIN STREET
STA. 1+00
LOT 52
LOT 53
LANE
LOT 54
LOT 55
LOT 56
LOT 57
JOHN BLACK AVENUE

NOTE
1. OVERHEAD HYDRO & M.T.S. LINES RELOCATED BY OTHERS
2. REGRADED DITCHES TO NEW C.B.'S & CULVERTS

RECORD DRAWING
APPROVED BY: [signature] DATE: Dec/90

EXISTING	LEGEND-PLAN	PROPOSED	EXISTING	LEGEND-PLAN	PROPOSED	EXISTING	LEGEND-PROFILE	PROPOSED
150 mm W.M.	WATERMAIN	150 mm W.M.		HYDRO		150 mm W.M.	WATERMAIN	
	HYDRANT			M.T.S.			HYDRANT	
	VALVE			CONCRETE			VALVE	
300 mm L.D.S.	LAND DRAINAGE SEWER	300 mm L.D.S.		ASPHALT		300 mm L.D.S.	LAND DRAINAGE SEWER	300 mm L.D.S.
250 mm W.W.S.	WASTE WATER SEWER	250 mm W.W.S.		PROPERTY LINE		250 mm W.W.S.	WASTE WATER SEWER	250 mm W.W.S.
	MANHOLE			SURVEY BAR			℄ PROFILE	
	CATCH BASIN							
	CURB INLET							
	JUNCTIONS							
	CULVERT							
	GAS							

LOCATION APPROVED
UNDERGROUND STRUCTURES
SUPV. U/G STRUCTURES COMMITTEE [signature] DATE

NOTE:
LOCATION OF UNDERGROUND STRUCTURES AS SHOWN ARE BASED ON THE BEST INFORMATION AVAILABLE BUT NO GUARANTEE IS GIVEN THAT ALL EXISTING UTILITIES ARE SHOWN OR THAT THE GIVEN LOCATIONS ARE EXACT. CONFIRMATION OF EXISTENCE AND EXACT LOCATION OF ALL SERVICES MUST BE OBTAINED FROM THE INDIVIDUAL UTILITIES BEFORE PROCEEDING WITH CONSTRUCTION

B.M. ELEV.

NO.	REVISIONS	DATE	BY

DILLON
Consulting Engineers • Planners
Environmental Scientists

DESIGNED BY D.P.K.	CHECKED BY D.P.K.
DRAWN BY D.M.W.	APPROVED BY [signature]
HOR. SCALE 1:250 VERTICAL 1:50	RELEASED FOR CONSTRUCTION
DATE JUN 89	DATE 1990 07 20

PROVINCE OF MANITOBA
8/07/90
D. P. KOHN
REGISTERED ENGINEER

CONSULTANT DRAWING NO. M-89-A-1

D 2550-01

THE CITY OF WINNIPEG
WORKS AND OPERATIONS DIVISION
STREETS AND TRANSPORTATION DEPARTMENT

KILDONAN CORRIDOR

CONSTRUCTION OF L.D.S. & RIVER OUTFALL ALONG JOHN BLACK AVENUE FROM MAIN STREET TO THE RED RIVER STAGE I

CITY DRAWING NUMBER

SHEET OF

EXIST. ℄ ROAD
EXIST. N. R.
EXIST. S. R.
FUTURE PROPOSED ROAD PROFILE
EXIST. 600 mm W.M.
EXIST. 150 mm W.M.
EXIST. 600 mm L.D.S.
EXIST. 250 mm W.W.S.
INV. EL. 221.998
INV. EL. 221.879
NEW 36.517 m LONG - 1800 mm L.D.S. AT 0.09% GRADE
NEW 84.103 m LONG - 1800mm L.D.S AT 0.09% GRADE
INV. EL. 221.803
INV. EL. 221.747
6.7 m LEAN MIX CONC. BACKFILL (SEE SECTION 2 DWG. NO. M-89-A-3)
NEW 43.88 m LONG - 1800 mm STRUCTURAL PLATE CORRUGATED STEEL PIPE AT 0.09% GRADE (SEE OUTFALL CROSS SECTION DWG NO. M-89-A-3)
7 JUN 89 W.L. 223.600
DEC 1987 ICE LEVEL 221.450
231.0
230.0
229.0
228.0
227.0
226.0
225.0
224.0
223.0
222.0
221.0
220.0
2+62.5
2+75
3+00
3+25
3+50
3+75
4+00
4+25
MATCH LINE
SEE DWG. NO. M-89-A-1
NEW M.H. 5A STA. 2+99.017
START OF NEW S.C.S.P STA. 3+93.12
SLIP JOINT STA. 3+99.82
SLIP JOINT STA. 4+16.65 (SEE STRUCTURAL DWG NO. M-89-A-3)
END OF NEW S.C.S.P. STA. 4+27
+26.017
+23.420
+22.368
+22.437
+21.761
+22.360
+21.859
+24.792
+24.617
+22.676
+21.780
+23.414
BOAT DOCK
TREES REMOVED
450mm ø CONC. STUB INV. EL. 226.091
NEW C.B. (STA. 3+00.082) RIM EL. 230.231 INV. EL. 229.030
NEW M.H. (STA. 2+99.017) RIM EL. 231.209 INV. EL. 226.066
NEW M.H. 5A (STA. 2+99.260) RIM EL. 231.268 INV. EL. 221.879
EXIST. 50 mm GAS
EXIST. 150 mm W.M.
ABANDONED EXIST. 600 mm L.D.S.
NEW 150mm 45° BENDS
EXIST. 250 mm W.W.S.
EXIST. 600 mm FEEDERMAIN
REMOVED EXIST. C.B. & C.M.P.
NEW 15 m LONG 600 mm C.M.P N. INV. EL. 230.266 S. INV. EL. 230.287
PROPOSED ℄
LOT 58
EXIST. 50 mm GAS
EXIST. 50 GAS
EXIST. 600mm L.D.S.
EXIST. 250mm W.W.S.
EXIST. 150mm W.M.
NEW 450mm L.D.S.
EXIST. 200mm W.W.S.
300mm ø CONC. CB LEAD 12.9m LONG
NEW C.B. (STA. 3+11.240) RIM EL. 230.483 INV. EL. 228.825
SCOTIA STREET
2641 SCOTIA AVE.
ABANDONED EXIST. C.B., C.M.P., C.B. LEAD & M.H.
NEW 1800 mm L.D.S. (TUNNELED)
NEW 150 mm 22° BEND
NEW 150 mm 45° BEND
EXIST. GRAVEL RDWY WITH ASPHALT CUTTINGS
AIR RELEASE VALVE
RELOCATED EXIST 150 mm W.M.
LIMIT OF ROAD
FEEDERMAIN VALVE PIT
ABANDONED EXIST 600 mm L.D.S. BENTONITE SLURRY TO LIMIT SHOWN
ABANDONED EXIST M.H.
LIMIT OF BENTONITE
REMOVED EXIST. CMP OUTFALL PIPE
RIVER CROSSING 600 mm STL. FEEDERMAIN PIPE
BOAT DOCK
HIGH STREET
JOHN BLACK AVENUE

NOTE
1. OVERHEAD HYDRO & M.T.S. LINES RELOCATED BY OTHERS
2. REGRADED DITCHES TO NEW C.B.'S & CULVERTS

EXISTING	LEGEND-PLAN	PROPOSED	EXISTING	LEGEND-PLAN	PROPOSED	EXISTING	LEGEND-PROFILE	PROPOSED
150 mm W.M.	WATERMAIN	150 mm W.M.		HYDRO		150 mm W.M.	WATERMAIN	
◇	HYDRANT	◆		M.T.S.		+	HYDRANT	+
⊗	VALVE	⊗		CONCRETE			VALVE	
300 mm L.D.S.	LAND DRAINAGE SEWER	300 mm L.D.S.		ASPHALT		300 mm L.D.S.	LAND DRAINAGE SEWER	300 mm L.D.S.
250 mm W.W.S.	WASTE WATER SEWER	250 mm W.W.S.		PROPERTY LINE		250 mm W.W.S.	WASTE WATER SEWER	250 mm W.W.S.
○	MANHOLE	●	⊕	SURVEY BAR			℄ PROFILE	
□	CATCH BASIN	■						
▽	CURB INLET	▼						
	JUNCTIONS							
	CULVERT							
	GAS							

LOCATION APPROVED
UNDERGROUND STRUCTURES
SUPV U/G STRUCTURES COMMITTEE — DATE June 22/89

NOTE:
LOCATION OF UNDERGROUND STRUCTURES AS SHOWN ARE BASED ON THE BEST INFORMATION AVAILABLE BUT NO GUARANTEE IS GIVEN THAT ALL EXISTING UTILITIES ARE SHOWN OR THAT THE GIVEN LOCATIONS ARE EXACT. CONFIRMATION OF EXISTENCE AND EXACT LOCATION OF ALL SERVICES MUST BE OBTAINED FROM THE INDIVIDUAL UTILITIES BEFORE PROCEEDING WITH CONSTRUCTION

NO	REVISIONS	DATE	BY
A	ADDED NEW 375mm C.M.P	22/6/89	D.M.W.
A	ADDED NOTES	22/6/89	D.M.W.
A	ADDED EXIST DITCH EL'S	22/6/89	D.M.W.
A	RELOCATED 150mm W.M.	22/6/89	D.M.W.
A	ADDED NEW M.H. & 2 C.B.'S	22/6/89	D.M.W.
A	REMOVED C.B & 2 LEADS	22/6/89	D.M.W.
A	CHANGE IN M.H. LOCATION	19/6/89	D.M.W.
A	CHANGE IN DWG. TITLE	19/6/89	D.M.W.

B.M. ELEV

DILLON
Consulting Engineers • Planners
Environmental Scientists

DESIGNED BY A.F.G
DRAWN BY D.M.W.
HOR SCALE 1:250
VERTICAL 1:50
DATE JUN 89
CHECKED BY D.P.K.
APPROVED BY
RELEASED FOR CONSTRUCTION
DATE 1989 07 20

ENGINEER'S SEAL
PROVINCE OF MANITOBA
9/6/89
A.F.G. GOSSEN
REGISTERED PROFESSIONAL ENGINEER

CONSULTANT DRAWING NO. M-89-A-2

RECORD DRAWING
APPROVED BY: — DATE Dec/90

THE CITY OF WINNIPEG
WORKS AND OPERATIONS DIVISION
STREETS AND TRANSPORTATION DEPARTMENT

KILDONAN CORRIDOR

CONSTRUCTION OF L.D.S. & RIVER OUTFALL ALONG JOHN BLACK AVENUE FROM MAIN STREET TO THE RED RIVER STAGE I

CITY DRAWING NUMBER
SHEET OF

D 2 550-01

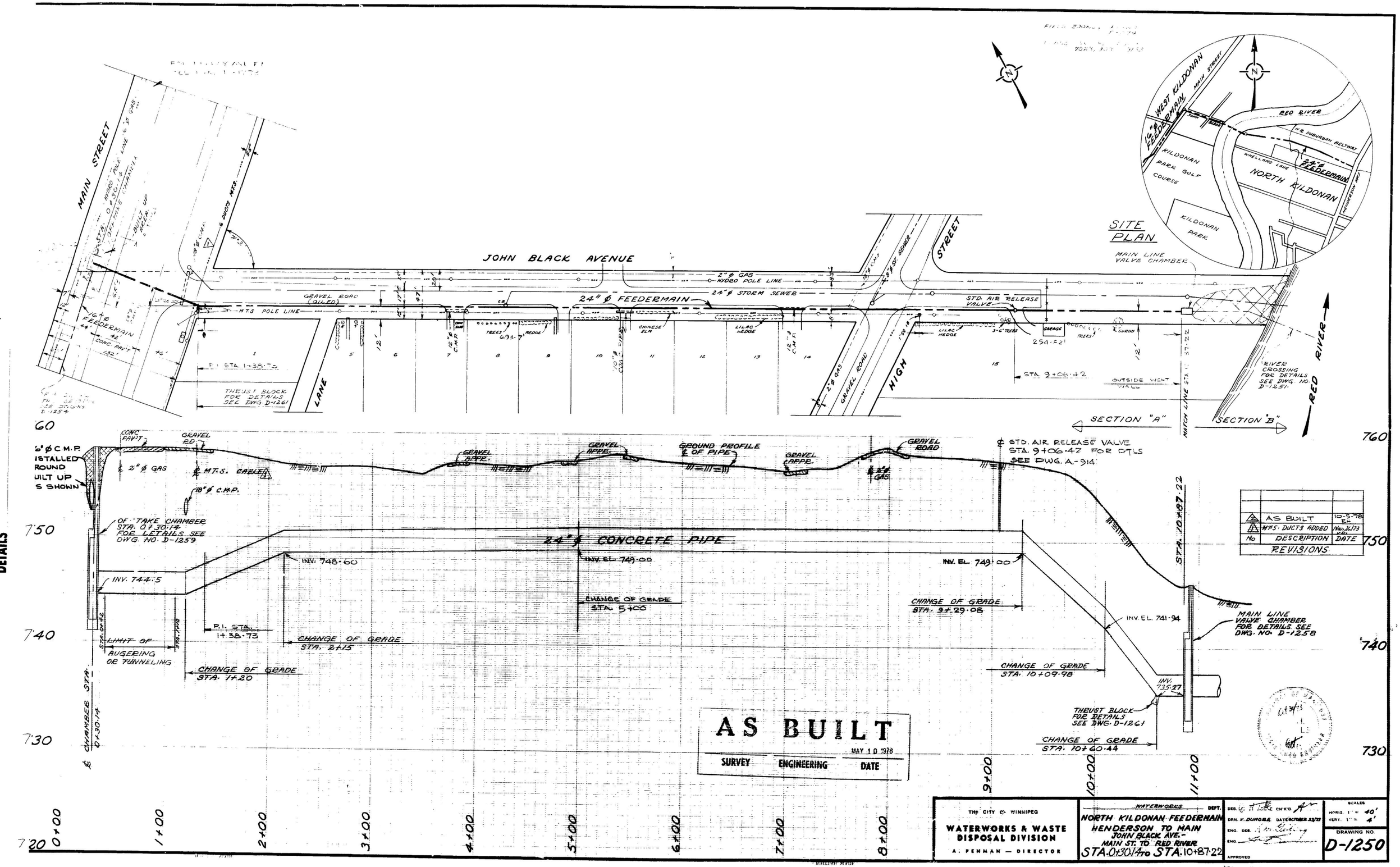

MAIN STREET
JOHN BLACK AVENUE
24" ø FEEDERMAIN
24" ø STORM SEWER
2" ø GAS
HYDRO POLE LINE
GRAVEL ROAD (OILED)
M.T.S. POLE LINE
STD. AIR RELEASE VALVE
MAIN LINE VALVE CHAMBER
SITE PLAN
WEST KILDONAN
16" ø FEEDERMAIN
MAIN STREET
RED RIVER
KILDONAN PARK GOLF COURSE
KILDONAN PARK
NORTH KILDONAN
24" ø FEEDERMAIN
WHELLAMS LANE
HENDERSON HWY
LANE
HIGH
STREET
GRAVEL ROAD
P.I. STA. 1+38.73
THRUST BLOCK FOR DETAILS SEE DWG. D-1261
STA. 9+06.42
OUTSIDE WEST WALL
RIVER CROSSING FOR DETAILS SEE DWG. NO. D-1251
RED RIVER
SECTION "A"
SECTION "B"
MATCH LINE STA. 10+87.22
6" ø C.M.P. INSTALLED ROUND BUILT UP AS SHOWN
CONC. PAV'T
GRAVEL RD.
2" ø GAS
M.T.S. CABLE
18" ø C.M.P.
GRAVEL APPR.
GROUND PROFILE ℄ OF PIPE
GRAVEL ROAD
℄ STD. AIR RELEASE VALVE STA. 9+06.42 FOR DTLS SEE DWG. A-914
OF TAKE CHAMBER STA. 0+30.14 FOR DETAILS SEE DWG. NO. D-1259
24" ø CONCRETE PIPE
INV. 744.5
INV. 748.60
INV. EL. 749.00
INV. EL. 749.00
INV. EL. 741.94
INV. 735.27
CHANGE OF GRADE STA. 5+00
CHANGE OF GRADE STA. 9+29.08
CHANGE OF GRADE STA. 10+09.98
CHANGE OF GRADE STA. 10+60.44
CHANGE OF GRADE STA. 2+15
CHANGE OF GRADE STA. 1+20
P.I. STA. 1+38.73
LIMIT OF AUGERING OR TUNNELING
MAIN LINE VALVE CHAMBER FOR DETAILS SEE DWG. NO. D-1258
THRUST BLOCK FOR DETAILS SEE DWG. D-1261
℄ CHAMBER STA. 0+30.14
STA. 10+87.22
760
750
740
730
720
0+00
1+00
2+00
3+00
4+00
5+00
6+00
7+00
8+00
9+00
10+00
11+00
AS BUILT
MAY 10 1978
SURVEY
ENGINEERING
DATE
AS BUILT 10-5-78
MTS. DUCTS ADDED Nov. 26/73
No DESCRIPTION DATE
REVISIONS
THE CITY OF WINNIPEG
WATERWORKS & WASTE DISPOSAL DIVISION
A. PENMAN — DIRECTOR
WATERWORKS DEPT.
NORTH KILDONAN FEEDERMAIN
HENDERSON TO MAIN
JOHN BLACK AVE.-
MAIN ST. TO RED RIVER
STA. 0+30.14 TO STA. 10+87.22
DEB. CH'K'D
DRN. V. DUMORE DATE OCTOBER 23/73
ENG. DES.
ENG.
APPROVED
SCALES
HORIZ. 1" = 40'
VERT. 1" = 4'
DRAWING NO.
D-1250

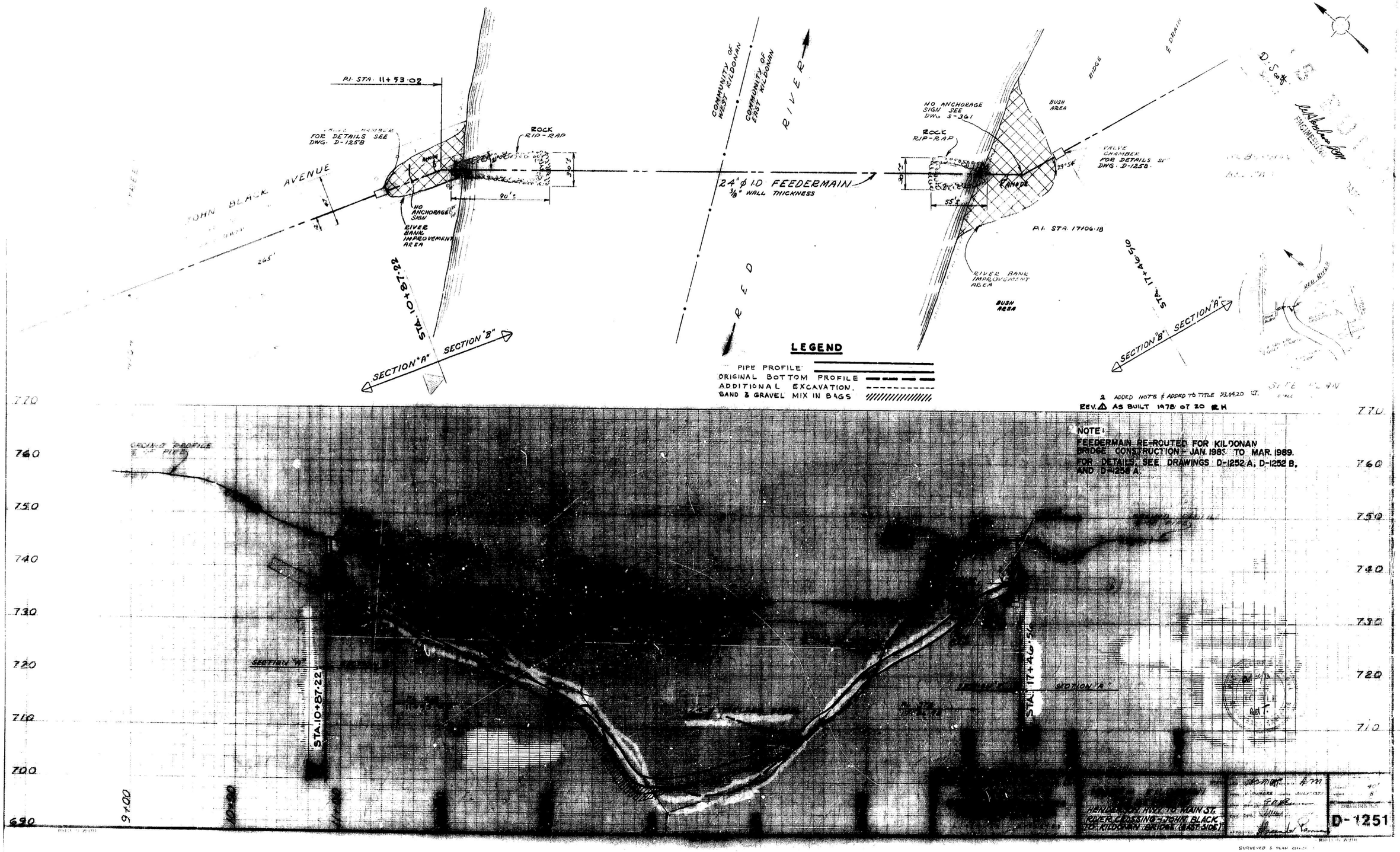

REF. or DRAWING No. D-1251 FILE No. FE 10160

DETAILS

REF. or DRAWING No. D-1251

DETAILS

FE 101 (2)

PI STA 11+53·02

FOR DETAILS SEE DWG. D-1258

ANODE

ROCK R/P-RAP

NO ANCHORAGE SIGN

RIVER BANK IMPROVEMENT AREA

STA. 10+87.22

SECTION "A" SECTION "B"

COMMUNITY OF WEST KILDONAN

COMMUNITY OF EAST KILDONAN

R I V E R

24" ϕ I.D FEEDERMAIN
3/8" WALL THICKNESS

NO ANCHORAGE SIGN SEE DWG. S-361

ROCK R/P-RAP

BUSH AREA

FOR DETAILS DWG D-1258

ANODE

P.I. STA 17+06.78

BUSH AREA

STA. 17+46.56

SECTION "B" SECTION "A"

LEGEND

PIPE PROFILE
ORIGINAL BOTTOM PROFILE
ADDITIONAL EXCAVATION.
SAND & GRAVEL MIX IN BAGS

2 ADDED NOTE & ADDED TO TITLE 93.04.20 ST.
REV. ⚠ AS BUILT 1978 07 20 R H

NOTE:
FEEDERMAIN RE-ROUTED FOR KILDONAN BRIDGE CONSTRUCTION - JAN. 1985 TO MAR. 1989.
FOR DETAILS, SEE DRAWINGS D-1252 A, D-1252 B, AND D-1258 A.

760
750
740
730
720
710
700
690

STA. 10+87·22
STA. 17+46·56
SECTION "A" SECTION "B"
P.I. STA. 11+53·02
P.I. STA. 17+06·78
24" ϕ WELDED STEEL PIPE
VALVE CHAMBER
REMOVED CENTRE
SIGN
INV. 730·2
RIVER BANK
WATER LINE

9+00 10+00 11+00 16+00 17+00

WATER WORKS

WATER & WASTE DEPARTMENT
WATER SUPPLY DIVISION
A. PEWMAN — DIRECTOR

NORTH KILDONAN
FEEDERMAIN
HENDERSON HWY. TO MAIN ST.
RIVER CROSSING - JOHN BLACK TO KILDONAN BRIDGE (EAST SIDE)

D-1251

0 20 40 60 80 100 120

W0 102-84

B.V.C. STA. 3+28.334 EL. 235.756

NEW NORTH & SOUTH GUTTER

NEW SIDEWALK 4.0% SLP

235.0

3.75

EXIST. TOP OF EMBANKMENT

2 m TYP.

+ 3.5 %

0.0 %

4

230.0

- 1.50 %

NORTH BERM

SOUTH BERM

VC 2

L	=	352
K	=	55
G1	=	+3.4%
G2	=	-3.0%

BRIDGE ROADWAY GUTTER BY OTHERS

E.V.C. STA. 6+80.354 EL. 236.460

NEW NORTH & SOUTH GUTTER

- 3.0 %

- 4.0 %

2350

NEW SIDEWALK

3.6

NEW NORTH SIDEWALK

2.0 (TYP.)

+4.0 %

4

-3.33 %

230.0

NEW SOUTH SIDEWALK

EXIST. GROUND AT ℄ CORRIDOR

3+50 4+00 4+50 5+00 5+50 6+00 6+50 7+00

MATCH LINE SEE DWG. NO. P2986-03

EXIST. 600mm FEEDERMAIN

CURVE DATA				
CURVE	RADIUS	DELTA	TANGENT	LENGTH
9-10	1400.0	11°45'00"	144.059	287.107

MATCH LINE SEE DWG. NO. P2986-05

600 mm FEEDERMAIN (ABANDONED)

STA. 6+67.693

STA. 6+69.693

STA. 6+71.693

STA. 6+73.693

ALUMINUM BALANCED BARRIER SEE DWG. DETAIL 2986-11/12

31.000

FOR TIE INTO APPROACH SLAB SEE DWG. NO. P2986-1C

12.5 TAPER

36.656 36.450 35.871

36.889 36.634 36.045

GRADED & SODDED MEDIAN

36.882 36.634 36.045

BARRIER BY OTHERS

36.834 36.460 35.871

R.O.W.

STA. 6+93.025

31.000

ALUMINUM BALANCED BARRIER SEE DWG. DETAIL 2986-11/12

3.0m LONG 15mm PARA CURB FOR CYCLIST

SOUND BARRIER BY OTHERS

FOR SIDEWALK DETAIL SEE DWG 2986-13

EXIST. 1829 mm SEWER

RIVER

RED

BRIDGE BY OTHERS

LIMIT OF BRIDGE BY OTHERS

2.00

6.70

5.40

2.00

8.70

1.50

36.194 36.450 35.816

36.624 36.932

36.624 36.869

36.450 36.637

GRADED & SODDED MEDIAN

NEW ALUMINUM BALANCED BARRIER

LIMIT OF ROADWAY CONST. PAVEMENT TO TIE INTO BRIDGE APPROACH SLAB SEE DETAIL DWG. P2986-10

STA. 3+56.363

STA. 3+58.386

STA. 3+60.615

STA. 3+62.693

SIDEWALK TO MATCH SIDEWALK UNDER BRIDGE STRUCTURE AT THESE LOCATIONS

NOTE.
ADDITIONAL AS-BUILT INFORMATION IS AVAILABLE FOR THE FOLLOWING CONTRACTS:
P.D.90-116 OVERHEAD SIGN STRUCTURES
P.D.90-117 NOISE ATTENUATION BARRIER
P.D.90-137 SOFT LANDSCAPING

NOTES:
1. ALL CHAINAGES AND STATIONINGS ARE ALONG CENTRELINE OF ROADWAY.
2. ASPHALT SHOULDER TO BE PLACED PRIOR TO INSTALLATION OF ALUMINUM BALANCED BARRIER.
3. FOR ALUMINUM BALANCED BARRIER LAYOUT SEE DRAWING P2986-12.

RECORD DRAWING
Brad Sacher APPROV'D BY
Dec 17/90 DATE

PROPOSED	LEGEND-PLAN	EXISTING
150 mm W.M.	WATERMAIN	150 mm W.M.
◇	HYDRANT	◆
⊗	VALVE	⊗
300 mm L.D.S.	LAND DRAINAGE SEWER	300 mm L.D.S.
250 mm W.W.S.	WASTE WATER SEWER	250 mm W.W.S.
○	MANHOLE	●
□	CATCH BASIN	■
□	CURB INLET	■
	JUNCTIONS	
	CULVERT	
	GAS	

EXISTING	LEGEND-PLAN	PROPOSED
	HYDRO	
	M.T.S.	
	CONCRETE	
	ASPHALT	
	PROPERTY LINE	
⊕	SURVEY BAR	

PROPOSED	LEGEND-PROFILE	EXISTING
150 mm W.M.	WATERMAIN	
+	HYDRANT	
—	VALVE	
300 mm L.D.S.	LAND DRAINAGE SEWER	300 mm L.D.S.
250 mm W.W.S.	WASTE WATER SEWER	250 mm W.W.S.
	℄ PROFILE	

LOCATION APPROVED
UNDERGROUND STRUCTURES
SUPV U/G STRUCTURES COMMITTEE
MAR 16/90 DATE

NOTE:
LOCATION OF UNDERGROUND STRUCTURES AS SHOWN WE BASED ON THE BEST INFORMATION AVAILABLE BUT NO GUARANTEE IS GIVEN THAT ALL EXISTING UTILITIES ARE SHOWN OR THAT THE GIVEN LOCATIONS ARE EXACT. CONFIRMATION OF EXISTENCE AND EXACT LOCATION OF ALL SERVICES MUST BE OBTAINED FROM THE INDIVIDUAL UTILITIES BEFORE PROCEEDING WITH CONSTRUCTION

B.M.
ELEV.

NO	REVISIONS	DATE	BY
1	GENERAL REVISIONS	6-19-90	D.M.W.

DILLON
Consulting Engineers • Planners
Environmental Scientists

DESIGNED BY	G.S.	CHECKED BY	D.P.K
DRAWN BY	D.M.W.	APPROVED BY	N.B.U.
HOR SCALE	1:500	RELEASED FOR CONSTRUCTION	
VERTICAL	1:100		
DATE	MARCH/90	DATE	

ENGINEER'S SEAL
PROVINCE OF MANITOBA
03/12/90
D. P. KRAHN
REGISTERED ENGINEER

CONSULTANT DRAWING NO.
R-90-B-3

THE CITY OF WINNIPEG
WORKS AND OPERATIONS DIVISION

KILDONAN BRIDGE PROJECT

ROADWORKS
STA. 3+50 STA. 7+00

DRAWING NUMBER P-2986-04
SHEET 4 OF 14

WO 102-84

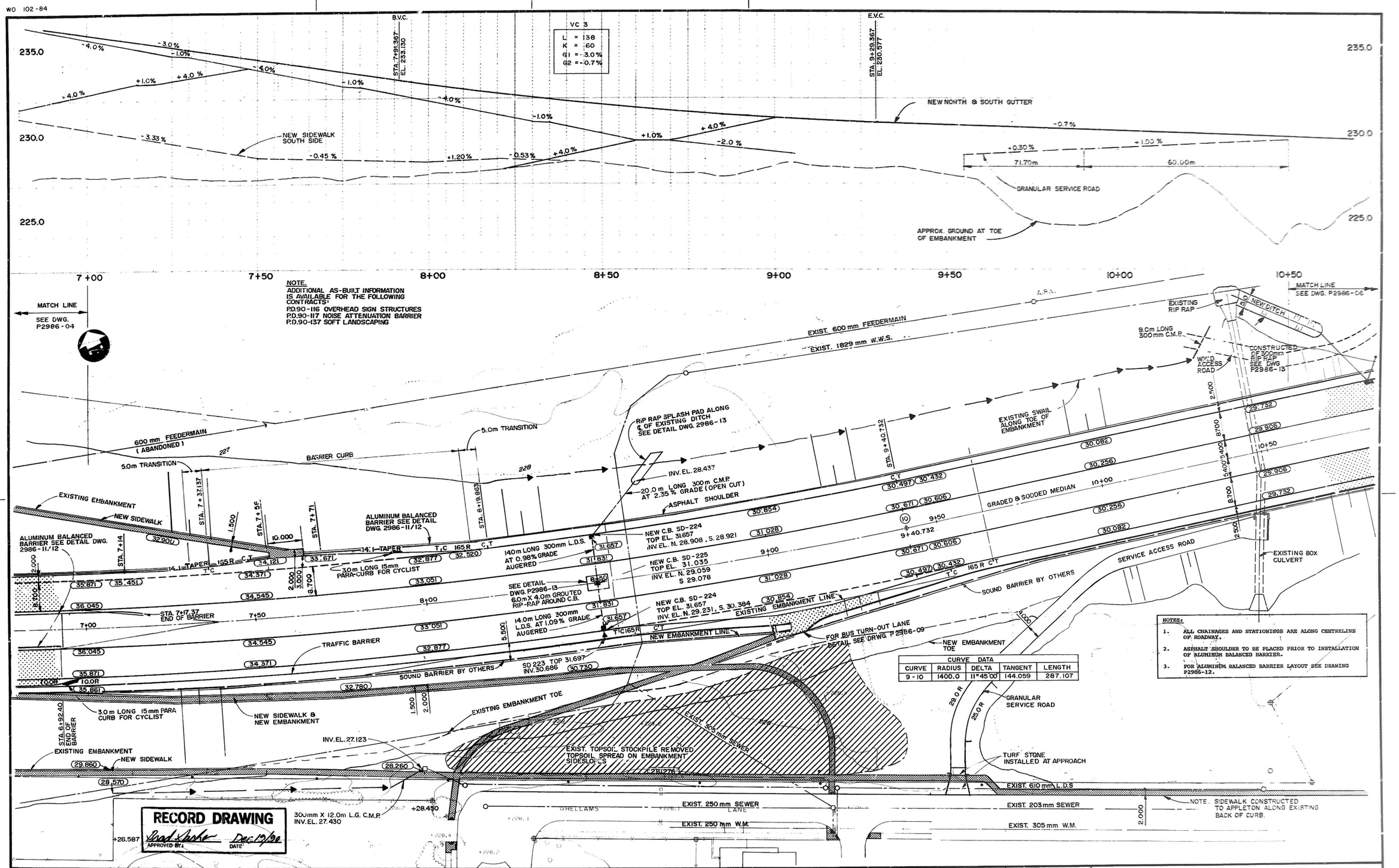

150 mm W.M.	WATERMAIN	150 mm W.M.		HYDRO		150 mm W.M.	WATERMAIN	
⊙	HYDRANT	⊕		M.T.S.		+	HYDRANT	+
⊗	VALVE	⊗		CONCRETE		X	VALVE	X
300 mm L.D.S.	LAND DRAINAGE SEWER	300 mm L.D.S.		ASPHALT		300 mm L.D.S.	LAND DRAINAGE SEWER	300 mm L.D.S.
250 mm W.W.S.	WASTE WATER SEWER	250 mm W.W.S.		PROPERTY LINE		250 mm W.W.S.	WASTE WATER SEWER	250 mm W.W.S.
○	MANHOLE	●	⊕	SURVEY BAR		—×—	℄ PROFILE	
□	CATCH BASIN	■						
□	CURB INLET	■						
	JUNCTIONS							
	CULVERT							
	GAS							
EXISTING	LEGEND-PLAN	PROPOSED	EXISTING	LEGEND-PLAN	PROPOSED	EXISTING	LEGEND-PROFILE	PROPOSED

LOCATION APPROVED
UNDERGROUND STRUCTURES
SUPV U/G STRUCTURES COMMITTEE — DATE

NOTE:
LOCATION OF UNDERGROUND STRUCTURES AS SHOWN ARE BASED ON THE BEST INFORMATION AVAILABLE BUT NO GUARANTEE IS GIVEN THAT ALL EXISTING UTILITIES ARE SHOWN OR THAT THE GIVEN LOCATIONS ARE EXACT. CONFIRMATION OF EXISTENCE AND EXACT LOCATION OF ALL SERVICES MUST BE OBTAINED FROM THE INDIVIDUAL UTILITIES BEFORE PROCEEDING WITH CONSTRUCTION

NO	REVISIONS	DATE	BY
1	GENERAL REVISIONS	6-19-90	D.M.W.

B M ELEV

DILLON
Consulting Engineers • Planners
Environmental Scientists

DESIGNED BY	G.S.	CHECKED BY	D.P.K.
DRAWN BY	D.M.W.	APPROVED BY	N.B.U.
HOR SCALE	1:500	RELEASED FOR CONSTRUCTION	
VERTICAL	1:100		
DATE	MARCH/90	DATE	

ENGINEER'S SEAL
PROVINCE OF MANITOBA
D. P. KRAHN
REGISTERED ENGINEER
DEC 19/90

CONSULTANT DRAWING NO.
R-90-B-4

THE CITY OF WINNIPEG
WORKS AND OPERATIONS DIVISION

KILDONAN BRIDGE PROJECT

ROADWORKS
STA. 7+00 TO STA. 10+50

DRAWING NUMBER: P2986-05
SHEET: 5 OF 14

WO 102-84

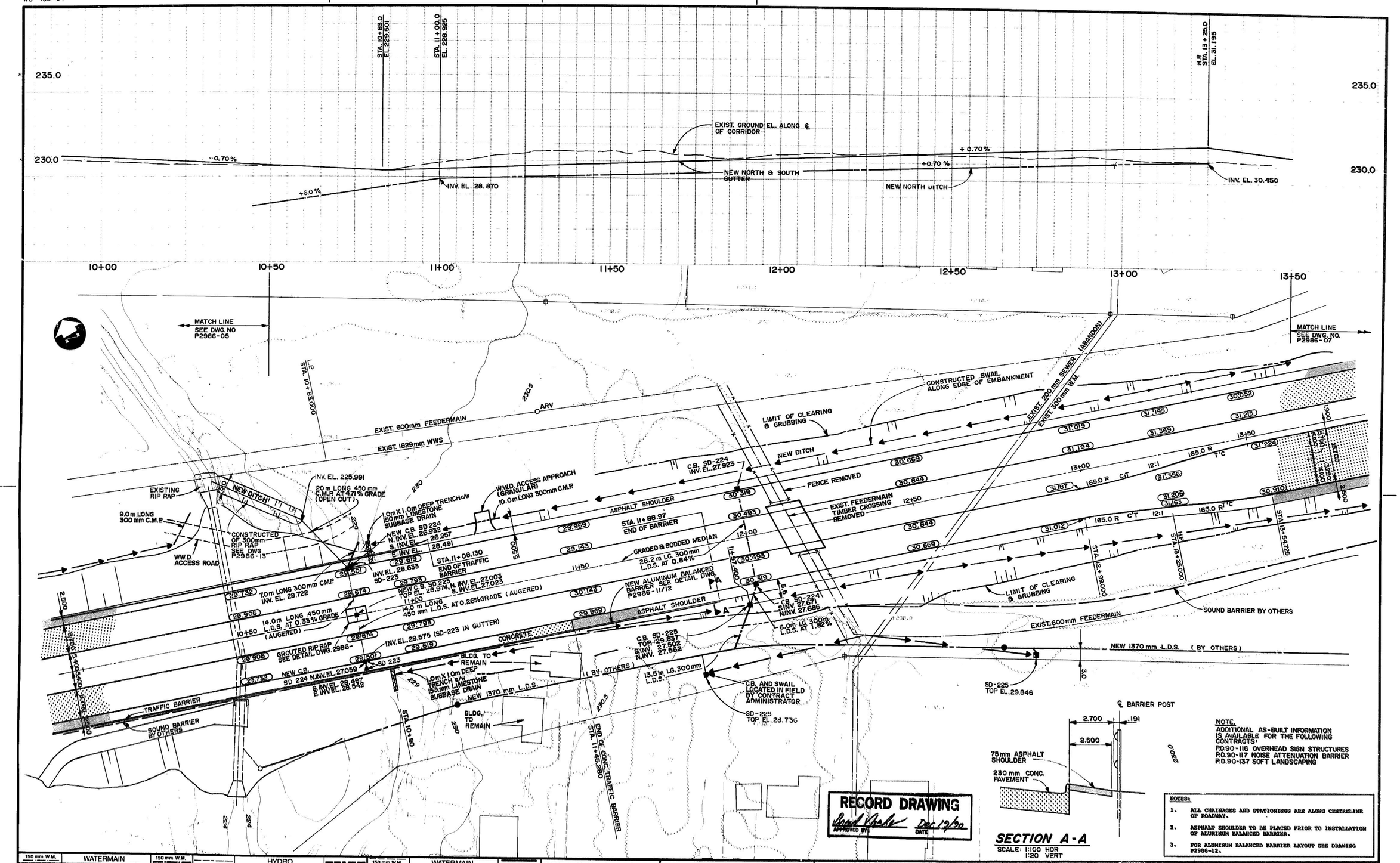

RECORD DRAWING
APPROVED BY Brad Roche DATE Dec 19/90

SECTION A-A

SCALE: 1:100 HOR
1:20 VERT

NOTES:
1. ALL CHAINAGES AND STATIONINGS ARE ALONG CENTRELINE OF ROADWAY.
2. ASPHALT SHOULDER TO BE PLACED PRIOR TO INSTALLATION OF ALUMINUM BALANCED BARRIER.
3. FOR ALUMINUM BALANCED BARRIER LAYOUT SEE DRAWING P2986-12.

EXISTING	LEGEND-PLAN	PROPOSED
150 mm W.M.	WATERMAIN	150 mm W.M.
	HYDRANT	
	VALVE	
300 mm L.D.S.	LAND DRAINAGE SEWER	300 mm L.D.S.
250 mm W.W.S.	WASTE WATER SEWER	250 mm W.W.S.
	MANHOLE	
	CATCH BASIN	
	CURB INLET	
	JUNCTIONS	
	CULVERT	
	GAS	

EXISTING	LEGEND-PLAN	PROPOSED
	HYDRO	
	M.T.S.	
	CONCRETE	
	ASPHALT	
	PROPERTY LINE	
	SURVEY BAR	

EXISTING	LEGEND-PROFILE	PROPOSED
150 mm W.M.	WATERMAIN	
	HYDRANT	
	VALVE	
300 mm L.D.S.	LAND DRAINAGE SEWER	300 mm L.D.S.
250 mm W.W.S.	WASTE WATER SEWER	250 mm W.W.S.
	℄ PROFILE	

LOCATION APPROVED
UNDERGROUND STRUCTURES
SUPV. U/G STRUCTURES COMMITTEE — DATE MAR 16/90

NOTE:
LOCATION OF UNDERGROUND STRUCTURES AS SHOWN ARE BASED ON THE BEST INFORMATION AVAILABLE BUT NO GUARANTEE IS GIVEN THAT ALL EXISTING UTILITIES ARE SHOWN OR THAT THE GIVEN LOCATIONS ARE EXACT. CONFIRMATION OF EXISTENCE AND EXACT LOCATION OF ALL SERVICES MUST BE OBTAINED FROM THE INDIVIDUAL UTILITIES BEFORE PROCEEDING WITH CONSTRUCTION

NO	REVISIONS	DATE	BY
	B.M. ELEV.		
1	GENERAL REVISIONS	6-19-90	D.M.W.

DILLON
Consulting Engineers · Planners
Environmental Scientists

DESIGNED BY	G.S.	CHECKED BY	D.P.K.
DRAWN BY	D.M.W.	APPROVED BY	N.B.U.
HOR SCALE	1:500	RELEASED FOR CONSTRUCTION	
VERTICAL	1:100		
DATE	MARCH/90	DATE	

ENGINEER'S SEAL
PROVINCE OF MANITOBA
D3/14/90
D. P. KRAHN
REGISTERED ENGINEER

CONSULTANT DRAWING NO.
R-90-B-5

THE CITY OF WINNIPEG
WORKS AND OPERATIONS DIVISION

KILDONAN BRIDGE PROJECT

CITY DRAWING NUMBER P2986-06
SHEET 6 OF 14

ROADWORKS
STA. 10+50 TO STA. 13+50

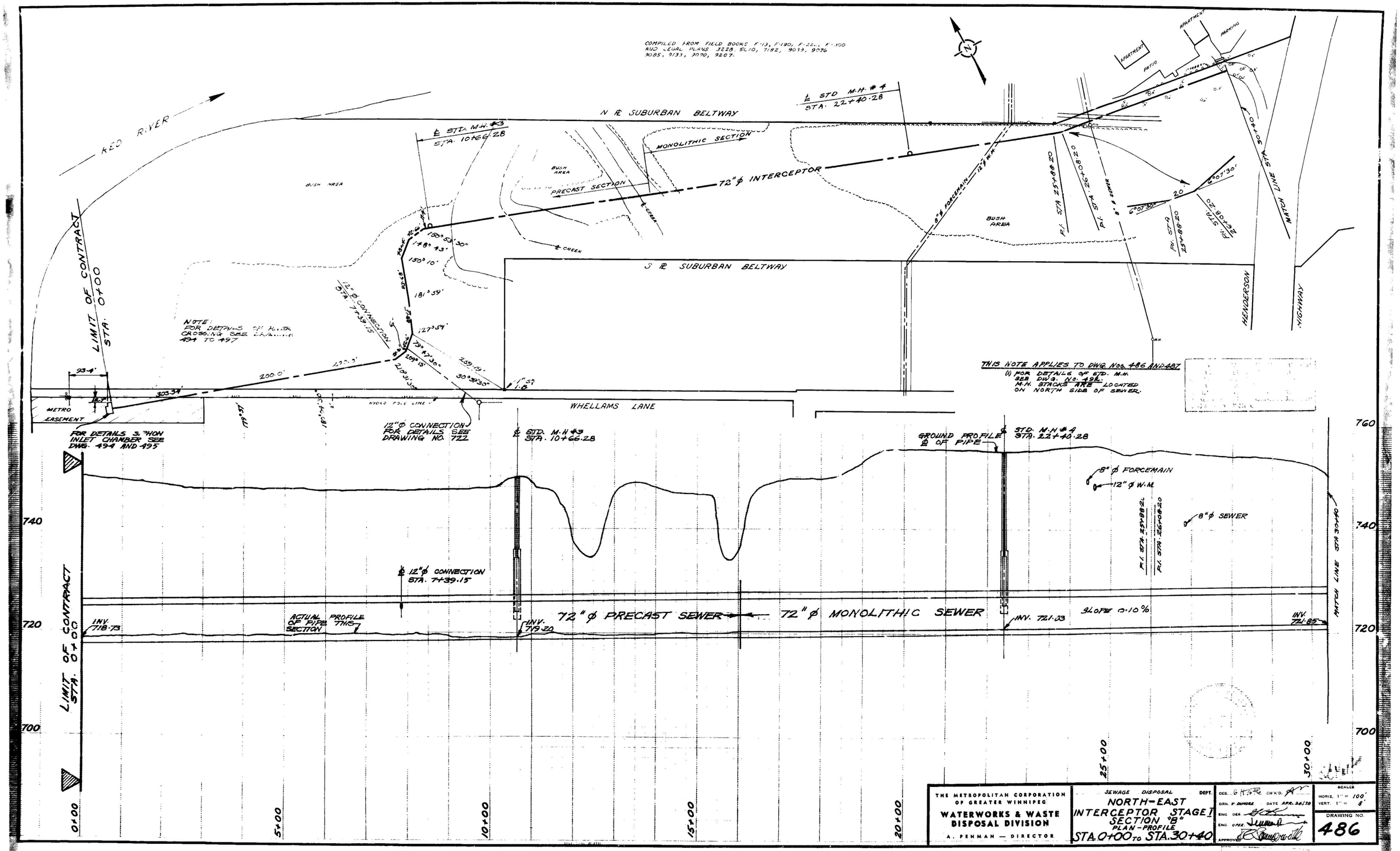
COMPILED FROM FIELD BOOKS F-13, F-190, F-220, F-300 AND LEGAL PLANS 3228, 5610, 7182, 9039, 9076 9085, 9133, 9070, 9207.
RED RIVER
N ℄ SUBURBAN BELTWAY
S ℄ SUBURBAN BELTWAY
℄ STD. M.H. #3 STA. 10+66.28
℄ STD M.H. #4 STA. 22+40.28
MONOLITHIC SECTION
PRECAST SECTION
72"ϕ INTERCEPTOR
BUSH AREA
℄ CREEK
8"ϕ FORCEMAIN
12"ϕ W.M.
P.I. STA 25+88.20
P.I. STA. 26+08.20
8"ϕ SEWER
APARTMENT
PATIO
PARKING
MATCH LINE STA 30+40
HENDERSON HIGHWAY
LIMIT OF CONTRACT STA. 0+00
NOTE: FOR DETAILS OF RIVER CROSSING SEE DRAWING 494 TO 497
12"ϕ CONNECTION STA. 7+39.15
METRO EASEMENT
FOR DETAILS SIPHON INLET CHAMBER SEE DWG. 494 AND 495
HYDRO POLE LINE
WHELLAMS LANE
12"ϕ CONNECTION FOR DETAILS SEE DRAWING NO. 722
THIS NOTE APPLIES TO DWG. NOS. 486 AND 487
(1) FOR DETAILS OF STD. M.H. SEE DWG. NO. 492. M.H. STACKS ARE LOCATED ON NORTH SIDE OF SEWER.
GROUND PROFILE ℄ OF PIPE
℄ 12"ϕ CONNECTION STA. 7+39.15
72"ϕ PRECAST SEWER
72"ϕ MONOLITHIC SEWER
SLOPE 0.10%
INV. 718.73
INV. 719.20
INV. 721.03
INV. 721.85
ACTUAL PROFILE OF PIPE THIS SECTION
740
720
700
760
0+00
5+00
10+00
15+00
20+00
25+00
30+00
THE METROPOLITAN CORPORATION OF GREATER WINNIPEG
WATERWORKS & WASTE DISPOSAL DIVISION
A. PENMAN — DIRECTOR
SEWAGE DISPOSAL DEPT.
NORTH-EAST INTERCEPTOR STAGE I SECTION "B"
PLAN-PROFILE
STA. 0+00 TO STA. 30+40
DES. G.H. Tothe
CH'K'D.
DRN. V. DUMORE
DATE APR. 24/70
ENG. DES.
ENG. OPER.
APPROVED
SCALES
HORIZ. 1" = 100'
VERT. 1" = 8'
DRAWING NO.
486

WO 102-84

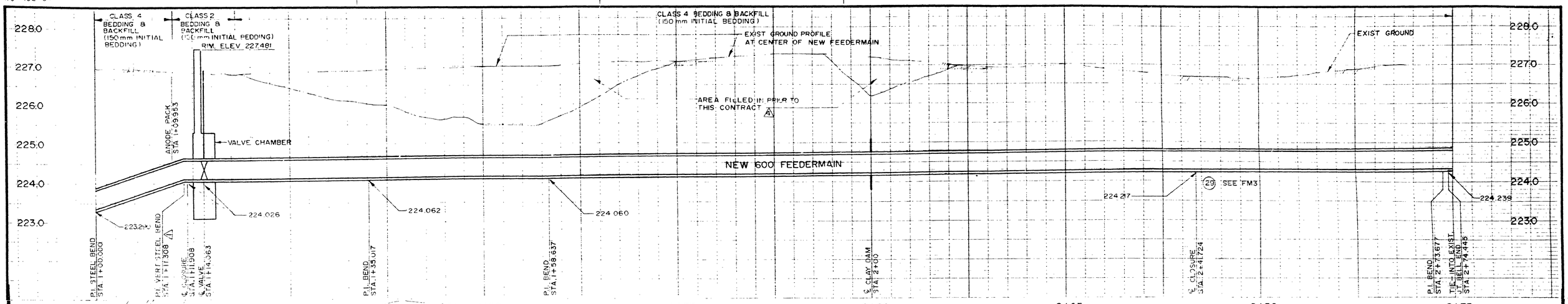

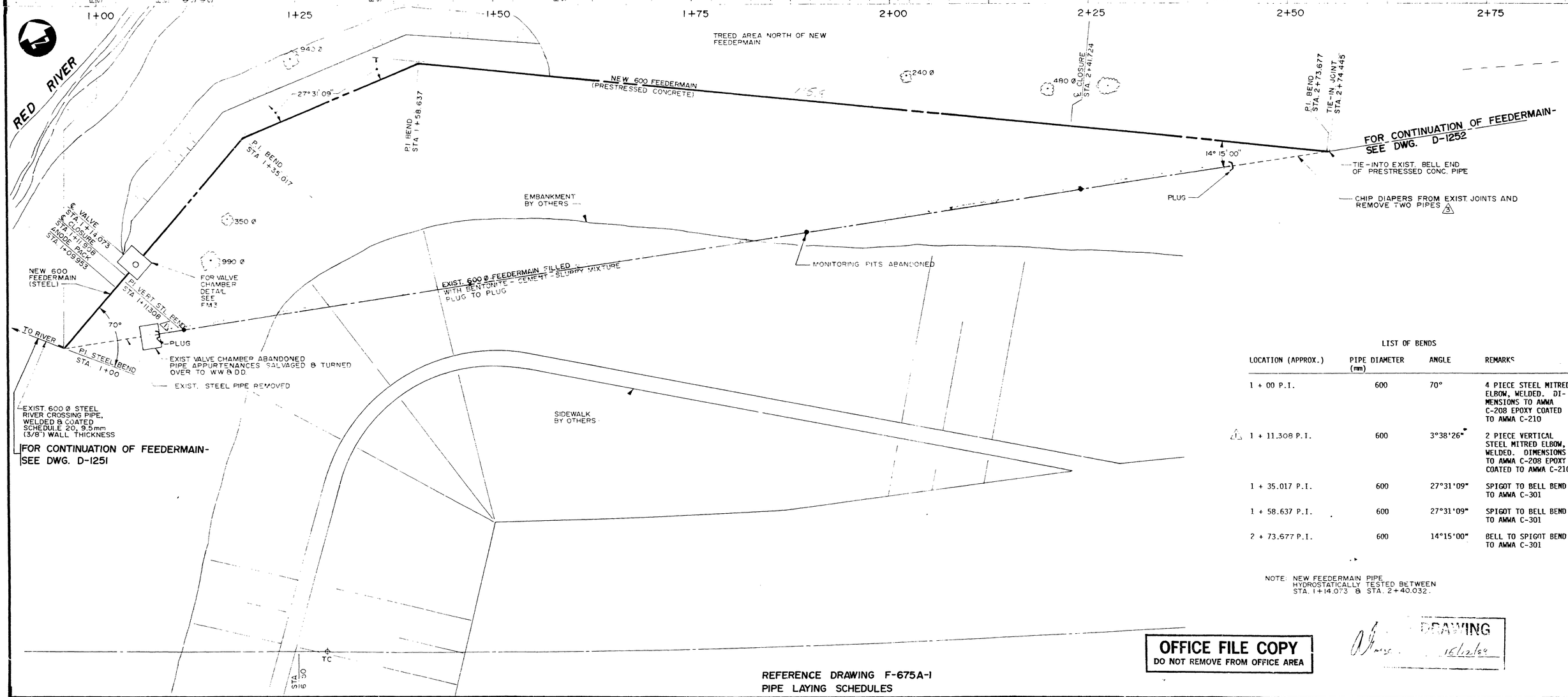

LIST OF BENDS

LOCATION (APPROX.)	PIPE DIAMETER (mm)	ANGLE	REMARKS
1 + 00 P.I.	600	70°	4 PIECE STEEL MITRED ELBOW, WELDED. DIMENSIONS TO AWWA C-208 EPOXY COATED TO AWWA C-210
2 1 + 11.308 P.I.	600	3°38'26"	2 PIECE VERTICAL STEEL MITRED ELBOW, WELDED. DIMENSIONS TO AWWA C-208 EPOXY COATED TO AWWA C-210
1 + 35.017 P.I.	600	27°31'09"	SPIGOT TO BELL BEND TO AWWA C-301
1 + 58.637 P.I.	600	27°31'09"	SPIGOT TO BELL BEND TO AWWA C-301
2 + 73.677 P.I.	600	14°15'00"	BELL TO SPIGOT BEND TO AWWA C-301

NOTE: NEW FEEDERMAIN PIPE HYDROSTATICALLY TESTED BETWEEN STA. 1+14.073 & STA. 2+40.032.

OFFICE FILE COPY
DO NOT REMOVE FROM OFFICE AREA

DRAWING 15/12/89

REFERENCE DRAWING F-675A-1
PIPE LAYING SCHEDULES

150 mm W.M.	WATERMAIN	150 mm W.M.		HYDRO		150 mm W.M.	WATERMAIN	
⊕	HYDRANT	⊕		M.T.S.		+	HYDRANT	+
⊗	VALVE	⊗		CONCRETE		⊗	VALVE	⊗
300 mm L.D.S.	LAND DRAINAGE SEWER	300 mm L.D.S.		ASPHALT		300 mm L.D.S.	LAND DRAINAGE SEWER	300 mm L.D.S.
250 mm W.W.S.	WASTE WATER SEWER	250 mm W.W.S.		PROPERTY LINE		250 mm W.W.S.	WASTE WATER SEWER	250 mm W.W.S.
○	MANHOLE	●		SURVEY BAR		℄	PROFILE	
□	CATCH BASIN	■						
▽	CURB INLET	▼						
	JUNCTIONS							
	CULVERT							
	GAS							
EXISTING	LEGEND-PLAN	PROPOSED	EXISTING	LEGEND-PLAN	PROPOSED	EXISTING	LEGEND-PROFILE	PROPOSED

LOCATION APPROVED
UNDERGROUND STRUCTURES
SUPV. HYD. STRUCTURES — DATE
COMMITTEE

NOTE:
LOCATION OF UNDERGROUND STRUCTURES AS SHOWN ARE BASED ON THE BEST INFORMATION AVAILABLE BUT NO GUARANTEE IS GIVEN THAT ALL EXISTING UTILITIES ARE SHOWN NOR THAT THE GIVEN LOCATIONS ARE EXACT. CONFIRMATION OF EXISTENCE AND EXACT LOCATION OF ALL SERVICES MUST BE OBTAINED FROM THE VARIOUS UTILITIES BEFORE PROCEEDING WITH CONSTRUCTION

B.M.
ELEV

NO	REVISIONS	DATE	BY
5	DWG. REFERENCES ADDED & TITLE & NEW DWG. NO. ADDED	93.04.19	K.T.
4	FILL NOTE ADDED	07.11.88	S.K.D.
3	DIAPER NOTE ADDED		
2	AIR RELEASE VALVE DELETED		
1	VERTICAL STL. BEND ADDED	07.11.88	S.K.D.

DILLON
Consulting Engineers • Planners
Environmental Scientists

DESIGNED BY	A.G.	CHECKED BY	D.P.K.
DRAWN BY	D.W. R.M.A.	APPROVED BY	
HOR. SCALE	1:250		
VERTICAL	1:50		
DATE	JULY, 1988		

ENGINEER'S SEAL

CONSULTANT DRAWING NO.
M-88-H-1

THE CITY OF WINNIPEG
WORKS AND OPERATIONS DIVISION
STREETS AND TRANSPORTATION DEPARTMENT

KILDONAN CORRIDOR

CITY DRAWING NUMBER B216-88-FM2

SHEET 2 OF 4

N.K. FEEDERMAIN RELOCATION
STA. 1+00 TO STA. 2+74.445
PLAN AND PROFILE

D-1252 A

WO 101-84

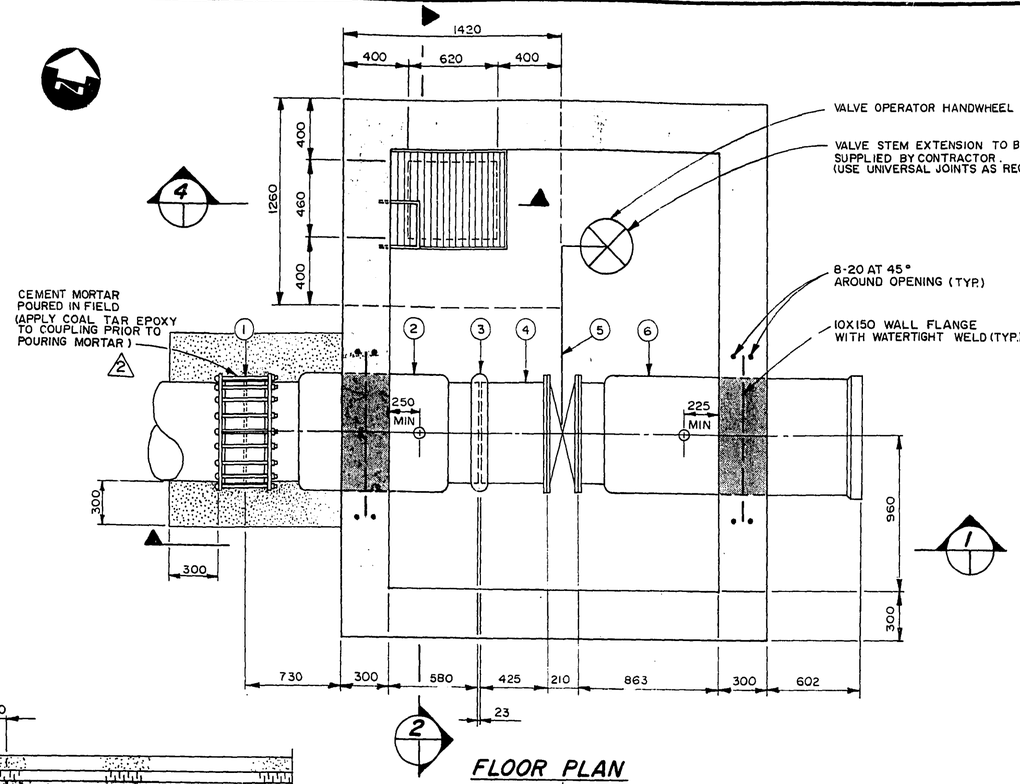

FLOOR PLAN

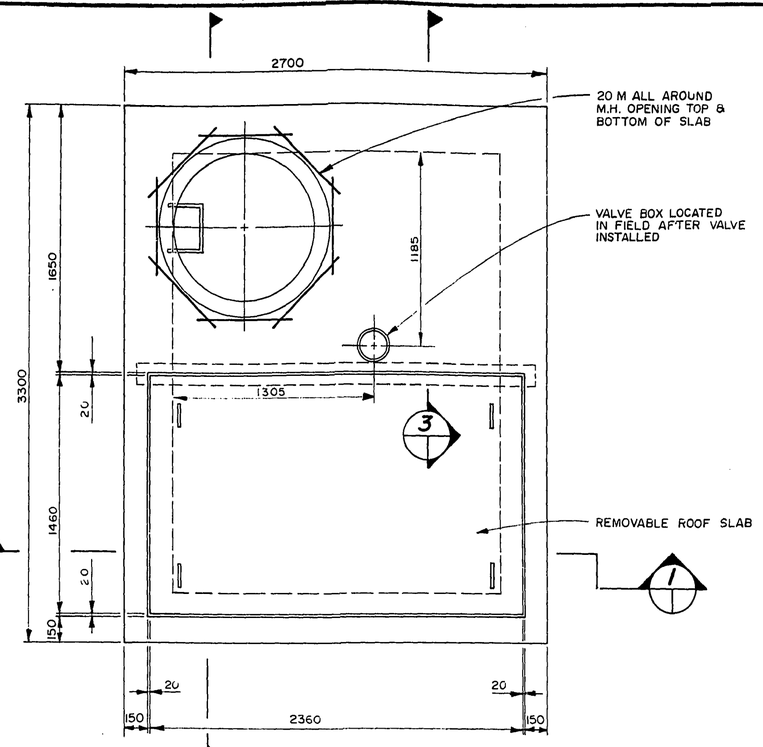

ROOF PLAN

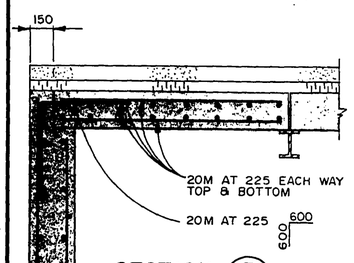

SECTION 3

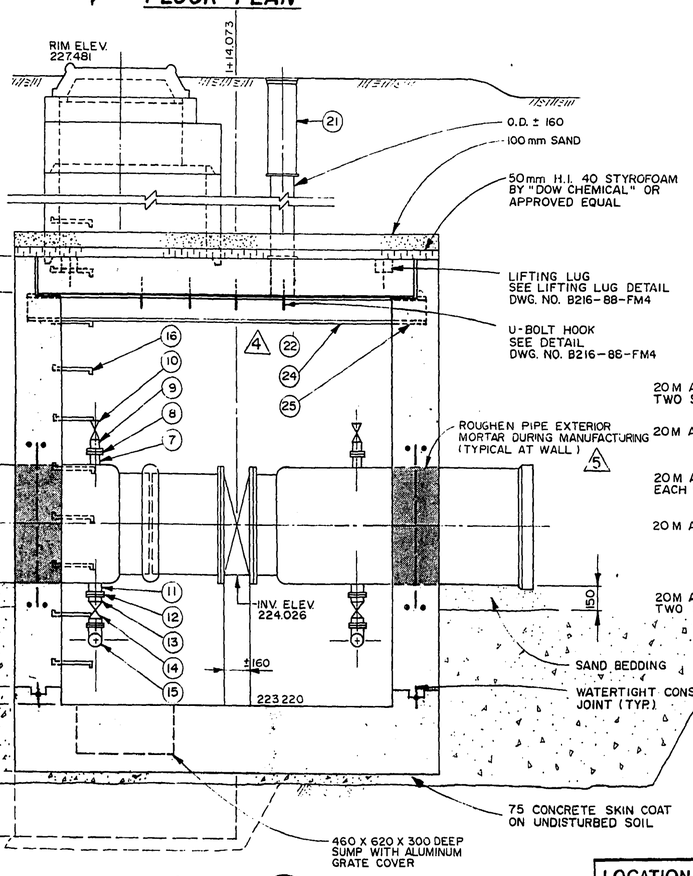

SECTION 1

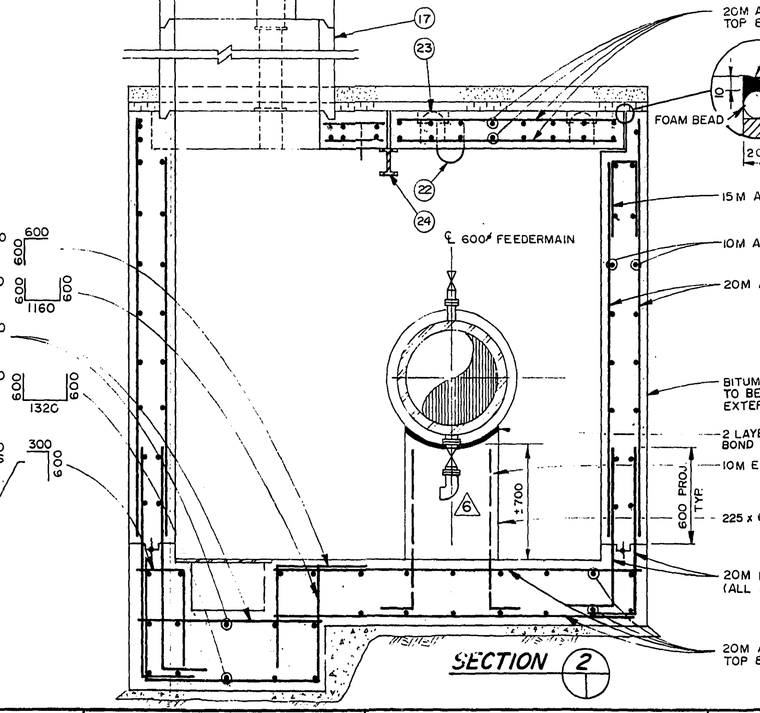

SECTION 2

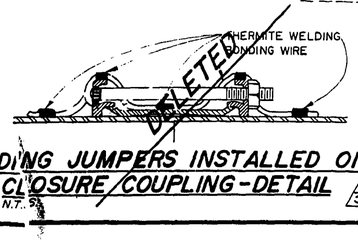

BONDING JUMPERS INSTALLED ON CLOSURE/COUPLING-DETAIL 3

N.T.S.

NOTE

1. CONCRETE SHALL BE TYPE 50 SULPHATE RESISTANT.
2. REINFORCING STEEL SHALL CONFORM TO C.S.A. G30.12-M, GRADE 400.
3. CONCRETE COVER ON REINFORCING 50mm

LIST OF MATERIALS 8

NO.	DESCRIPTION	LENGTH	QUANTITY	DETAIL DRAWING NO.
1	600 Ø Closure Coupling Romac 400 610 O.D. 8		2	B216-88-FM2 -FM3
2	600 Ø Prestressed Concrete Pipe Wall Piece (Plain end to Victaulic Style 51) 8	1470	1	-FM3
3	600 Ø Victaulic Coupling Style 51		1	-FM3
4	600 Ø Concrete Pipe Adaptor (Victaulic #51 to Flange)	430	1	-FM3
5	600 Ø Short Body Butterfly Valve, See Notes Below Jenkins AWWA Butterfly Valve	203	1	-FM3
6	600 Ø Prestressed Concrete Pressure Pipe Wall Piece (Flange to Bell)	1772	1	-FM3
7	50 Ø Cast Bronze or Brass Nipple (Threaded)	125	2	-FM3
8	50 Ø Cast Bronze or Brass Flange (Threaded)		2	-FM3
9	50 Ø Cast Bronze or Brass Nipple (Threaded)		2	-FM3
10	50 Ø Bronze Gate Valve (Threaded), Kitz No. 05-200		2	-FM3
11	75 Ø Cast Bronze or Brass Nipple (Threaded)	125	2	-FM3
12	75 Ø Cast Bronze or Brass Flange (Threaded)		2	-FM3
13	75 Ø Cast Bronze or Brass Nipple (Threaded)	125	2	-FM3
14	75 Ø Bronze Gate Valve (Threaded). Kitz No. 27-300		2	-FM3
15	75 Ø Cast Bronze or Brass 90° Street Elbow (Threaded)		2	-FM3
16	Standard City of Winnipeg Manhole Rungs at 300 O.C.		As Required	-FM3
17	900 Ø ASTM C-76 Class II Precast Manhole Riser Sections		As Required	-FM3 CW SD-010
18	900 Ø to 750 Ø ASTM C-76 Class II Precast Concrete Eccentric Flat Top Reducer	1		-FM3 CW SD-101
19	750 Ø ASTM C-76 Class II Precast Concrete Manhole Riser Section	As Required		-FM3 CW SD-101
20	Standard City of Winnipeg Manhole Frame With Solid Cover	1		-FM3 CW SD-104 CW SD-105
21	Standard City of Winnipeg Hinged Cover Valve Box c/w Valve Stem Extension With AWWA Nut	1		-FM3 CW SD-100
22	U-Bolt Hooks - Galvanized 8	4		-FM4
23	Lifting Lugs - Galvanized	4		-FM4
24	Steel Beam, Galvanized W 200 x 36 (G40.21-300W)	2550		-FM3
25	Steel Bearing Plate, Galvanized (225 x 165 x 10)	2		-FM3
26	Four Section Mitred Steel Bend, Welded, Epoxy Coated and Lined	1		-FM4
27	Serrated Aluminum Grating Bearing Bars 32 x 4.8 @ 30 O.C. c/w Frame and Anchors.	1		-FM4
28	Two Section Mitred Steel Bend, Welded, Epoxy Coated and Lined 8	1		-FM4
29	600 O Closure Coupling Romac 400 655 O.D.	1		-FM2

NOTES:
1. CITY TO SUPPLY BUTTERFLY VALVE. CONTRACTOR TO INSTALL & SUPPLY 316 STAINLESS STEEL NUTS & BOLTS AND GASKETS
2. ALL BRONZE / BRASS ITEMS ARE TO BE SCHEDULE 80 5

OFFICE FILE COPY
DO NOT REMOVE FROM OFFICE AREA
AS BUILT DRAWING
15/12/89

LOCATION APPROVED
UNDERGROUND STRUCTURES
SUPV U/G STRUCTURES COMMITTEE — DATE

NOTE:
LOCATION OF UNDERGROUND STRUCTURES AS SHOWN ARE BASED ON THE BEST INFORMATION AVAILABLE BUT NO GUARANTEE IS GIVEN THAT ALL EXISTING UTILITIES ARE SHOWN OR THAT THE GIVEN LOCATIONS ARE EXACT. CONFIRMATION OF EXISTENCE AND EXACT LOCATION OF ALL SERVICES MUST BE OBTAINED FROM THE INDIVIDUAL UTILITIES BEFORE PROCEEDING WITH CONSTRUCTION

BM ELEV				
8	ADDITIONAL NOTE	07.11.88	S.K.B.	
8	LIST OF MATERIALS	07.11.88	S.K.B.	
7	JOINT CONSTRUCTION			
6	ELBOW ORIENTATION			
5	PIPE PREPERATION			
4	HOOK ORIENTATION			
3	DELETE BONDING JUMPERS			
2	FEEDERMAIN COUPLING	07.11.88	S.K.B.	
1	PREVIOUSLY DWG. NO. FM4	16.9.88	R.M.A.	
NO	REVISIONS	DATE	BY	

DILLON
Consulting Engineers • Planners
Environmental Scientists

DESIGNED BY	A.G.	CHECKED BY	D.P.K.
DRAWN BY	D.M.W.	APPROVED BY	
HOR SCALE	1:20		
VERTICAL			
DATE	JULY, 1988		

ENGINEER'S SEAL
25/8/88

CONSULTANT DRAWING NO.
M-88-H-2

THE CITY OF WINNIPEG
WORKS AND OPERATIONS DIVISION
STREETS AND TRANSPORTATION DEPARTMENT

KILDONAN CORRIDOR

N.K. FEEDERMAIN RELOCATION
VALVE PIT - STA. 1+14.073
CONCRETE AND REINFORCING

CITY DRAWING NUMBER B216-88-FM3
SHEET 3 OF 4
D-1258 A

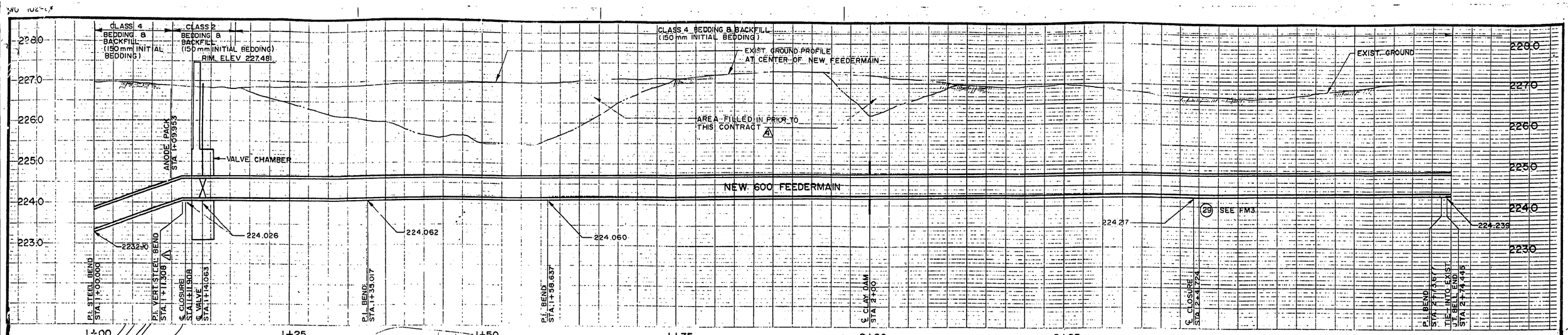

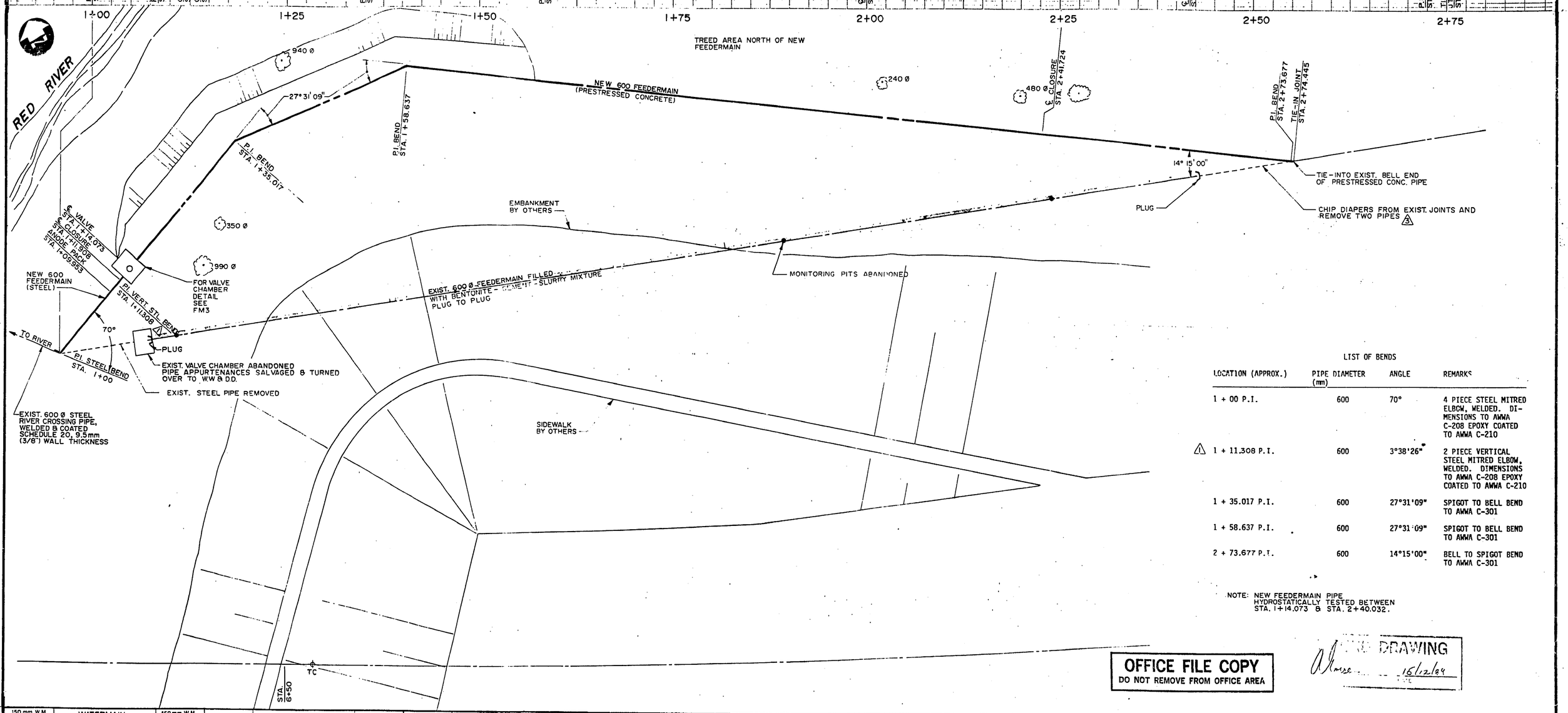

LIST OF BENDS

LOCATION (APPROX.)	PIPE DIAMETER (mm)	ANGLE	REMARKS
1 + 00 P.I.	600	70°	4 PIECE STEEL MITRED ELBOW, WELDED. DIMENSIONS TO AWWA C-208 EPOXY COATED TO AWWA C-210
⚠1 1 + 11.308 P.I.	600	3°38'26"	2 PIECE VERTICAL STEEL MITRED ELBOW, WELDED. DIMENSIONS TO AWWA C-208 EPOXY COATED TO AWWA C-210
1 + 35.017 P.I.	600	27°31'09"	SPIGOT TO BELL BEND TO AWWA C-301
1 + 58.637 P.I.	600	27°31'09"	SPIGOT TO BELL BEND TO AWWA C-301
2 + 73.677 P.I.	600	14°15'00"	BELL TO SPIGOT BEND TO AWWA C-301

NOTE: NEW FEEDERMAIN PIPE HYDROSTATICALLY TESTED BETWEEN STA. 1+14.073 & STA. 2+40.032.

OFFICE FILE COPY
DO NOT REMOVE FROM OFFICE AREA

AS CONSTRUCTED DRAWING
16/12/89

150 mm W.M.	WATERMAIN	150mm W.M.	HYDRO	150 mm W.M.	WATERMAIN
◇	HYDRANT	✦	M.T.S.	+	HYDRANT	+
⊗	VALVE	⊗	CONCRETE	×	VALVE	×
300 mm L.D.S.	LAND DRAINAGE SEWER	300 mm L.D.S.	ASPHALT	300 mm L.D.S.	LAND DRAINAGE SEWER	300 mm L.D.S.
250 mm W.W.S.	WASTE WATER SEWER	250 mm W.W.S.	PROPERTY LINE	250 mm W.W.S.	WASTE WATER SEWER	250 mm W.W.S.
○	MANHOLE	●	SURVEY BAR	℄	PROFILE	
□	CATCH BASIN	■				
▽	CURB INLET	▼				
	JUNCTIONS					
	CULVERT					
	GAS					
EXISTING	LEGEND-PLAN	PROPOSED	EXISTING	LEGEND-PLAN	PROPOSED	EXISTING	LEGEND-PROFILE	PROPOSED

LOCATION APPROVED
UNDERGROUND STRUCTURES
SUPV U/G STRUCTURES, COMMITTEE — DATE

NOTE:
LOCATION OF UNDERGROUND STRUCTURES AS SHOWN ARE BASED ON THE BEST INFORMATION AVAILABLE BUT NO GUARANTEE IS GIVEN THAT ALL EXISTING UTILITIES ARE SHOWN OR THAT THE GIVEN LOCATIONS ARE EXACT. CONFIRMATION OF EXISTENCE AND EXACT LOCATION OF ALL SERVICES MUST BE OBTAINED FROM THE INDIVIDUAL UTILITIES BEFORE PROCEEDING WITH CONSTRUCTION

B M ELEV

NO	REVISIONS	DATE	BY
4	FILL NOTE ADDED	07.11.88	S.K.D
3	DIAPER NOTE ADDED		
2	AIR RELEASE VALVE DELETED		
⚠1	VERTICAL STL. BEND ADDED	07.11.88	S.K.B

DILLON
Consulting Engineers • Planners
Environmental Scientists

DESIGNED BY	A.G.	CHECKED BY	D.P.K.
DRAWN BY	D.W. R.M.A.	APPROVED BY	
HOR. SCALE	1:250		
VERTICAL	1:50		
DATE	JULY, 1988		

ENGINEER'S SEAL
25/8/88

CONSULTANT DRAWING NO.
M-88-H-1

THE CITY OF WINNIPEG
WORKS AND OPERATIONS DIVISION
STREETS AND TRANSPORTATION DEPARTMENT

KILDONAN CORRIDOR
FEEDERMAIN RELOCATION
PLAN AND PROFILE

CITY DRAWING NUMBER B216-88-FM2
SHEET 2 OF 4
D-1258B

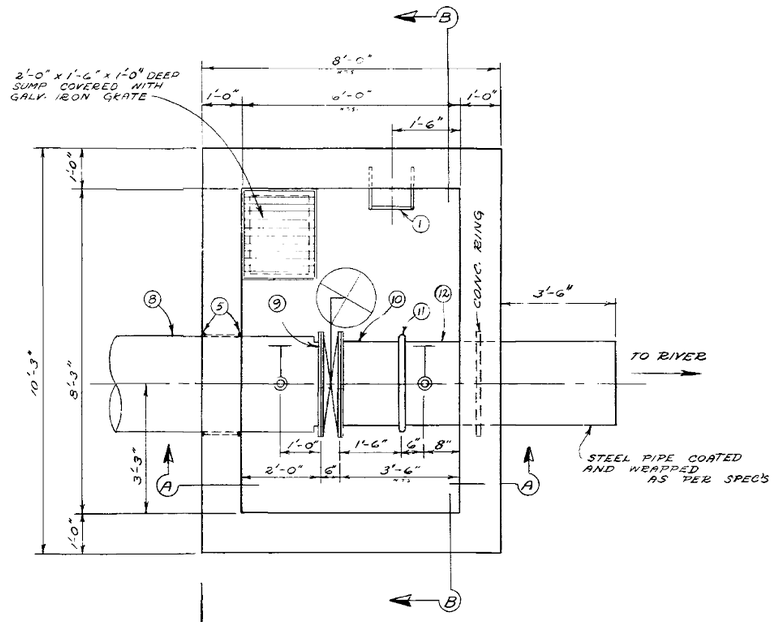

FLOOR PLAN

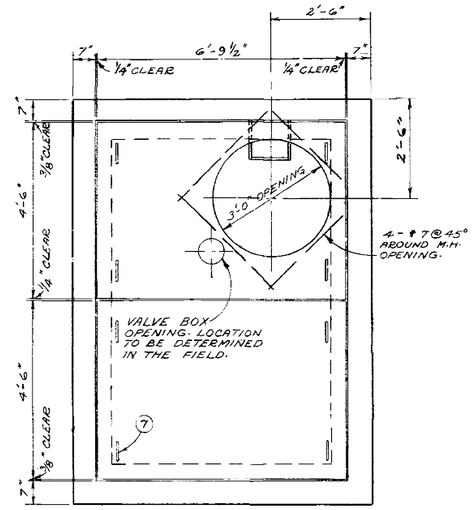

ROOF PLAN

No.	DESCRIPTION	QUANTITY (PER CHAMBER)
1.	Standard City of Winnipeg M.H. Steps at 15" C-C. For details see drawing No. A-817	
2.	Standard City of Winnipeg Waterworks M.H. frame and solid cover.	
3.	30" x 36" ø ASTM C76-70 Class II eccentric; flat top reducer section (Precast concrete).	
4.	36"ø ASTM C76-70 Class II Precast concrete M.H. section with "Ram-Nek" or an approved equal gaskets.	
5.	Notches in Roof Slab joints and around Pipe Openings for details see drawing Number A-874.	
6.	U-Bolt Hook. For details see drawing Number A-877.	2
7.	Lifting Lugs. For details see drawing Number A-878.	8
8.	24"ø concrete pipe 6'-0" long Sta. 10+86 - Bell to flange Sta. 17+47 - Flange to spigot.	1
9.	24"ø butterfly valve-flanged.	1
10.	24"ø STEEL adaptor-flange to plain end. 1'-6" LONG.	1
11.	24"ø VICTAULIC coupling style #51.	1
12.	24"ø STEEL pipe plain end to plain end 6'-0" long	1
13.	2"ø steel outlet - flange	2
14.	2"ø bronze threaded flange	2
15.	2"ø bronze nipple - threaded	2
16.	2"ø bronze gate valve threaded	2
17.	3"ø steel outlet - flange	2
18.	3"ø bronze threaded flange	2
19.	3"ø bronze nipple - threaded	2
20.	3"ø bronze gate valve - threaded	2
21.	3"ø 90° galvanized elbow	2

○ TO BE SUPPLIED BY THE CITY

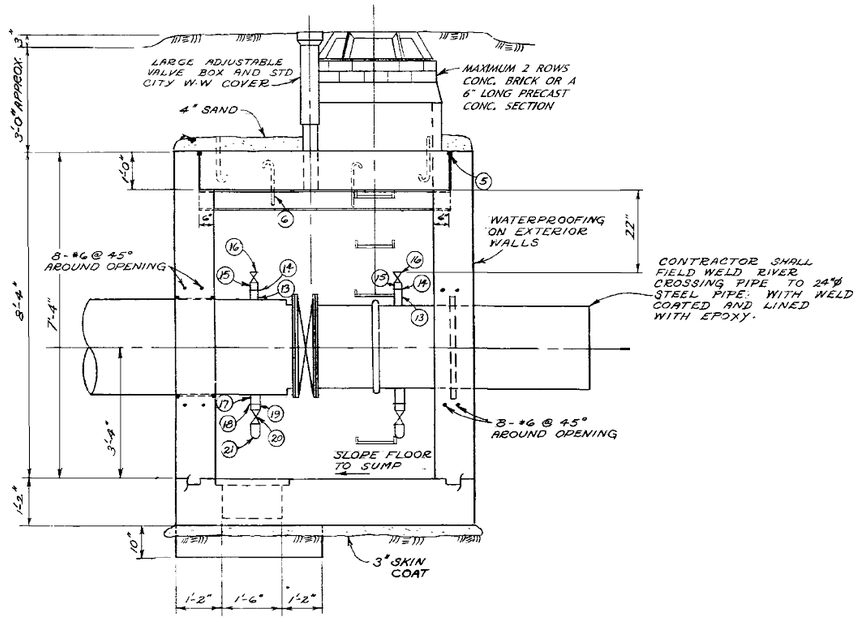

SECTION "A-A"

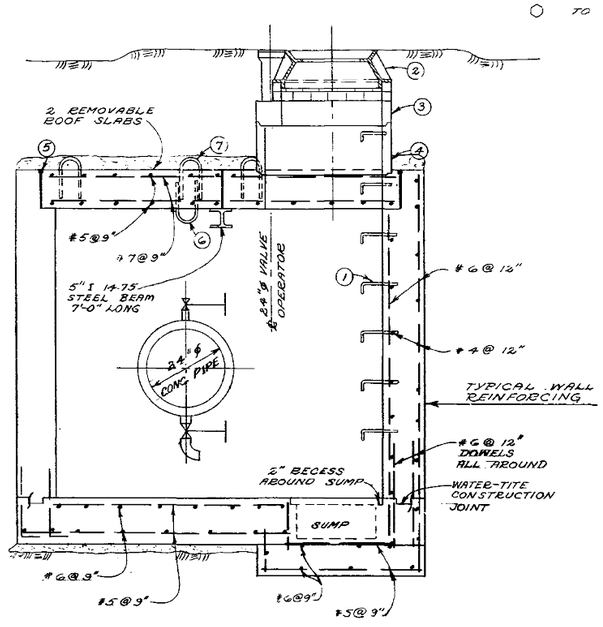

SECTION "B-B"

NOTE:
FOR LOCATION PLAN OF THIS VALVE CHAMBER SEE DRAWING D-1251

NOTE:
THIS DRAWING WAS ALSO FOR VALVE CHAMBER AT STA 17+46.57, WHICH WAS ABANDONED IN 1989, DURING FEEDERMAIN REALIGNMENT. SEE DRAWING D-1252A

NOTE: THIS DRAWING CONTAINS A RASTER IMAGE
FILENAME : D-1258.TIF

LEGEND

WATERWORKS, WASTE AND DISPOSAL: UNDERGROUND UTILITIES

- PROPOSED FORCEMAIN, INTERCEPTOR OR SECONDARY SEWER
- EXISTING FORCEMAIN, INTERCEPTOR OR SECONDARY SEWER — W.W.D. 24"ø SEWER
- PROPOSED FEEDERMAIN
- EXISTING FEEDERMAIN — W.W.D. 24"ø W.M.
- W.W.D. — WATERWORKS, WASTE AND DISPOSAL

OTHER UNDERGROUND UTILITIES

- COMMUNITY SEWER
- COMMUNITY WATERMAIN
- GAS
- HYDRO DUCT
- M.T.S. DUCT OR CABLE
- STREET LIGHTING, RAILWAY SIGNAL OR TRAFFIC SIGNAL CABLE

SURFACE UTILITIES

- COMMUNITY BOUNDARY LINE
- FENCE LINE
- POLE LINE
- RAILWAY LINE

MISCELLANEOUS SYMBOLS

- CATCH BASIN
- CULVERT
- HYDRANT
- MANHOLE
- HYDRO OR M.T.S. POLE
- LAMP STANDARD
- RAILWAY OR TRAFFIC SIGNAL STANDARD
- SURVEY BAR
- TREE
- VALVE

NOTES

MAIN LINE VALVE CHAMBERS AT STATION 10+86 & STATION 17+47

NO.	DESCRIPTION	DATE	BY
1	REVISED TO AN AUTOCAD DRAWING	05.08.02	WKT

REVISIONS

FIELD BOOK(S) NO. — SURVEYED BY

LAND SURVEY PLAN(S) NO. — DATE

B. M.

The City of Winnipeg
Waterworks, Waste and Disposal Division

DEPARTMENT
WATERWORKS

NORTH KILDONAN FEEDERMAIN HENDERSON TO MAIN MAIN LINE VALVE CHAMBER AT STATION 10+87.22

PROVINCE OF MANITOBA — C. H. TOTTLE — REGISTERED ENGINEER

DESIGNED BY	DRAWN BY V. DUMORE
CHECKED BY	DATE OCTOBER 23/'73
APPROVED BY	
SCALE 1/2" = 1'-0"	DRAWING NO. D-1258

AS BUILT

D. Smith SURVEY

Hutchinson ENGINEERING

1978 07 20 DATE

P.I. STA. 11+53.02

VALVE CHAMBER FOR DETAILS SEE DWG. D-1259

ROCK RIP-RAP

24" ø I.D. FEEDERMAIN 3/8" WALL THICKNESS

90'±

NO ANCHORAGE SIGN

RIVER BANK IMPROVEMENT AREA

8" ø SEWER

JOHN BLACK AVENUE

HYDRO POLE LINE

24" ø SEWER

265'

LOT 15

LOT 16

MAIN

STA. 10+87.22

SECTION "A" SECTION "B"

NO ANCHORAGE SIGN SEE DWG S-361.

ROCK RIP-RAP

BUSH AREA

EDGE

E DRAIN

VALVE CHAMBER FOR DETAILS SEE DWG. D-1258.

P.I. STA. 17+06.78

RIVER BANK IMPROVEMENT AREA

BUSH AREA

STA. 17+46.56

SECTION "B" SECTION "A"

SUBURBAN BELTWAY

LEGEND

PIPE PROFILE

ORIGINAL BOTTOM PROFILE

ADDITIONAL EXCAVATION.

SAND & GRAVEL MIX IN BAGS

SITE PLAN

SCALE: 1" = 2000'

2 ADDED NOTE & ADDED TO TITLE 93.04.20 KT.

REV. AS BUILT 1978 07 20 RH

NOTE:

FEEDERMAIN RE-ROUTED FOR KILDONAN BRIDGE CONSTRUCTION - JAN. 1989 TO MAR. 1989.

FOR DETAILS, SEE DRAWINGS D-1252 A, D-1252 B, AND D-1258 A.

GROUND PROFILE OF PIPE

770

760

750

740

730

720

710

VALVE CHAMBER

WINGWALL

MAIN

ELEV. 736.5

CLAY DAM

SECTION "A" SECTION "B"

P.I. STA. 11+53.02

STA. 10+87.22

24" ø WELDED STEEL PIPE

IMPROVED BANK GRADE

SIGN

VALVE C.I. & TEE

ANCHOR INSTALL. RIP RAP

INV 736.5

CLAY DAM

SECTION "B" SECTION "A"

P.I. STA. 17+06.78

STA. 17+46.56

17+00

18+00

19+00

THE METROPOLITAN CORPORATION OF GREATER WINNIPEG

WATERWORKS & WASTE DISPOSAL DIVISION

NORTH KILDONAN FEEDERMAIN HENDERSON HWY TO MAIN ST. RIVER CROSSING - JOHN BLACK TO KILDONAN BRIDGE (EAST SIDE)

DRAWING NO. D-1251

SURVEYED & PLAN CHECKED BY

APPROVED AS BUILT