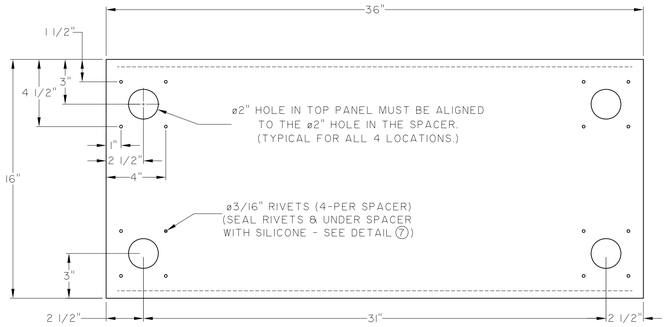

1 CORRIDOR UNIT TOP PANEL

0.051 ALUMINIUM PLATE - 19" x 36" LG. (1 REQ's TOP)

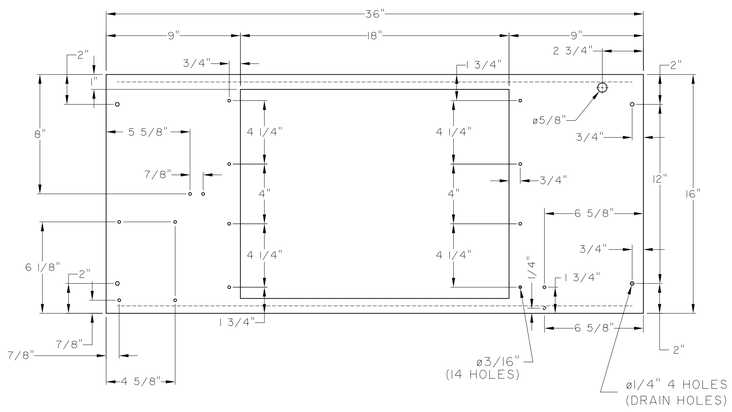

4 CORRIDOR UNIT BOTTOM PANEL

0.051 ALUMINIUM PLATE - 19" x 36" LG. (1 REQ's TOP)

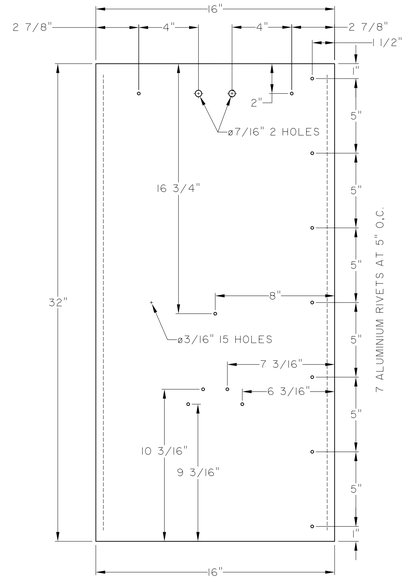

2 CORRIDOR UNIT LEFT PANEL

0.051 ALUMINIUM PLATE - 19" x 32" LG. (1 REQ's)

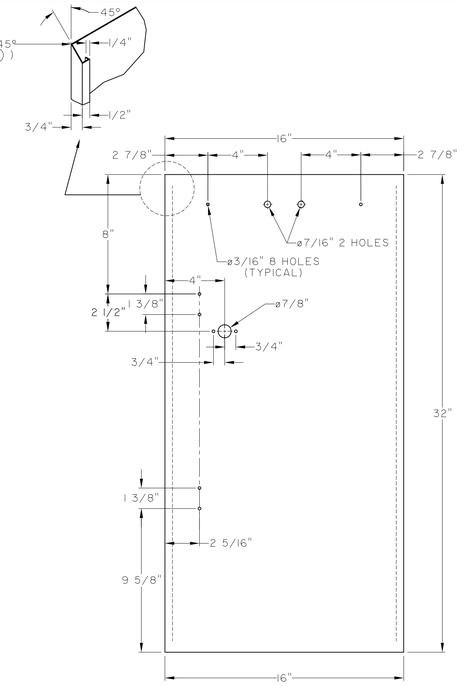

3 CORRIDOR UNIT RIGHT PANEL

0.051 ALUMINIUM PLATE - 19" x 32" LG. (1 REQ'D.)

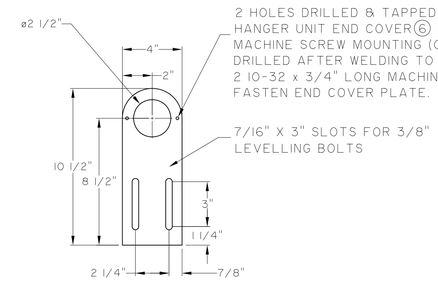

5 HANGER UNIT END PANEL

1/4" ALUMINIUM PLATE 4"x10 1/2" LONG (2 REQ'D)

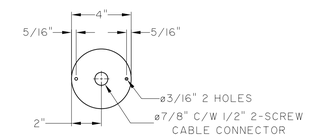

6 HANGER UNIT END COVER

14 GAUGE ALUMINIUM PLATE ø4" (1 REQ'D)

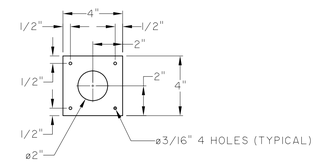

7 SPACER

3/8" ALUMINUM SPACER PLATE 4" x 4"
(4 x PER CORRIDOR UNIT)

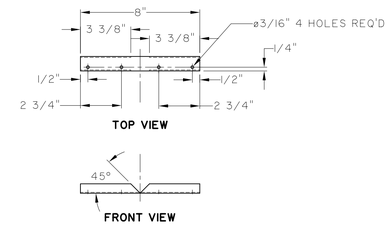

10 CHANNEL 8"LONG

16 GAUGE GALVANIZED STEEL
(AFTER 90° BEND - WELD INSIDE BOTH SIDES AT BEND)

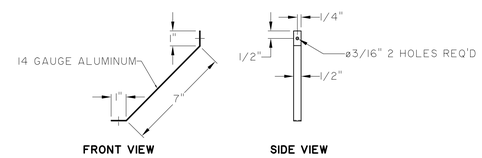

11 LAMP SUPPORT BRACKET

0.051 ALUMINIUM 1"x7" (1 REQ'D.)

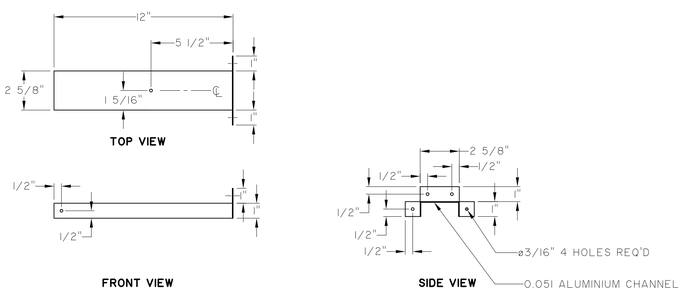

8 LAMP SUPPORT

0.051 ALUMINUM (1-REQ'D 4 5/8"x13")

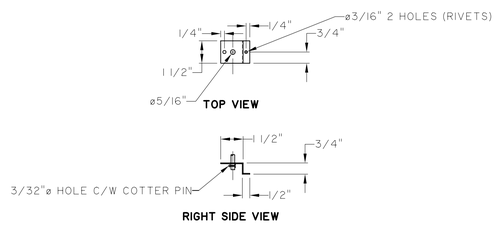

12 DOOR RETAINER BRACKET

(0.051 ALUMINIUM 1 1/2"x 2 3/4" LONG, 1 REQ'D)

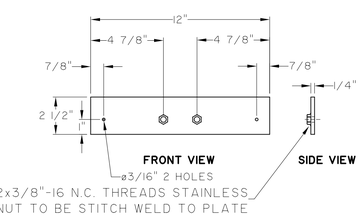

14 SIDEWALL REINFORCING PLATE

STAINLESS STEEL PLATE 2 1/2"x12" LONG (2 REQ'D.)
2x1/8"THICK PLATES WELDED TOGETHER OR 1 - 1/4" PLATE

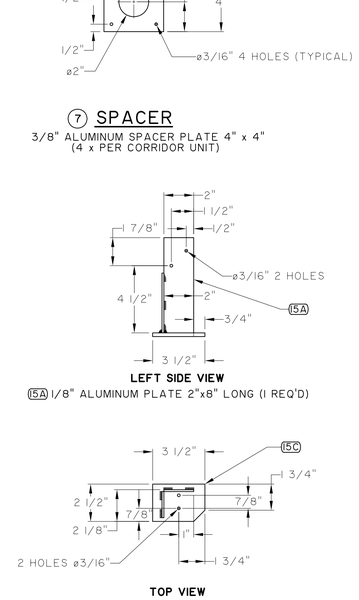

15 SODIUM LAMP SOCKET BRACKET

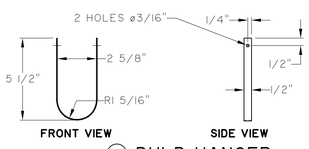

9 BULB HANGER

0.051 ALUMINUM (1-REQ'D 1/2"x11 5/8")

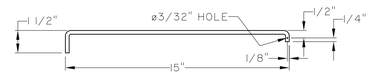

13 DOOR RETAINER ROD

(1/4"ø STAIN.STL. ROD- 1 REQ'D.)

NOTE:
FOR B.O.M SEE DWG ST-145 SHT 1 OF 3

No	DATE	REVISIONS	BY
3.	04 10 22	ADDITIONAL DIMENSIONS TO CORRIDOR UNIT BOTTOM PANEL	N.K.B.
2.	04-10-07	ADD DIMENSION TO CORRIDOR UNIT BOTTOM PANEL	N.K.B.
1	01.04.05	REDRAWN FROM MANUAL DWG #M-456 2 OF 2 TO CAD.	N.K.B.

TRAFFIC SIGNALS SYSTEM MANAGEMENT ENGINEER ____ DATE ____

MANAGER OF TRANSPORTATION ENGINEERING ____ DATE ____

DRAWN BY SW 2001.04.05 PRELIM. CHK. ____
DATE DATE

PROVINCE OF MANITOBA
ORIGINAL SIGNED
E. V. PACHOLOK
APRIL 11, 2001
REGISTERED ENGINEER

DESIGNED BY ____
CHECKED BY ____
DATE

Winnipeg

THE CITY OF WINNIPEG
PUBLIC WORKS DEPARTMENT
TRANSPORTATION ENGINEERING DIVISION

INTERNALLY ILLUMINATED PEDESTRIAN CORRIDOR SIGN UNIT 36" x 32"
DETAIL DRAWING

SCALE 3/16"=1"

DRAWING NO. ST-145
3 OF 3