A1 SIZE – 594mm x 841mm

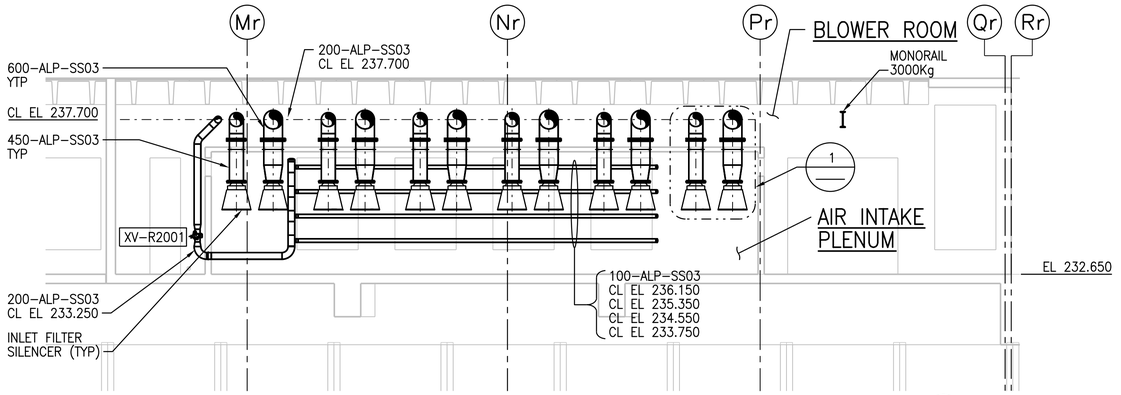

G SECTION
1:100
PGAD-R001
PGAD-R005
PGAD-R009
PGAD-R013

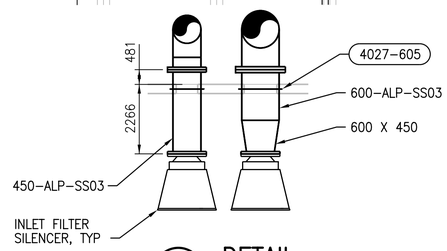

1 DETAIL
1:50

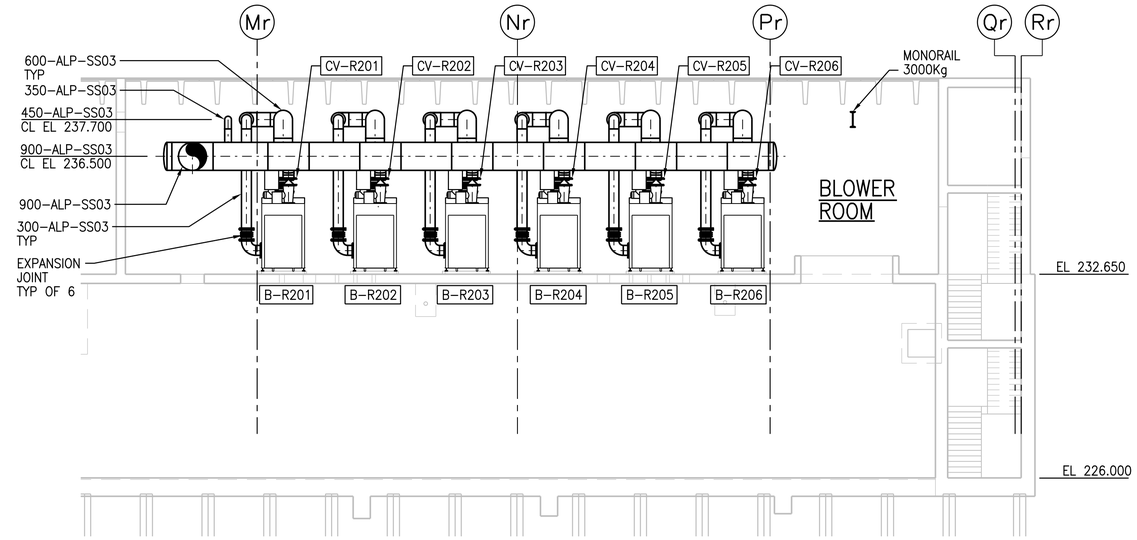

H SECTION
1:100
PGAD-R001
PGAD-R005
PGAD-R009
PGAD-R013

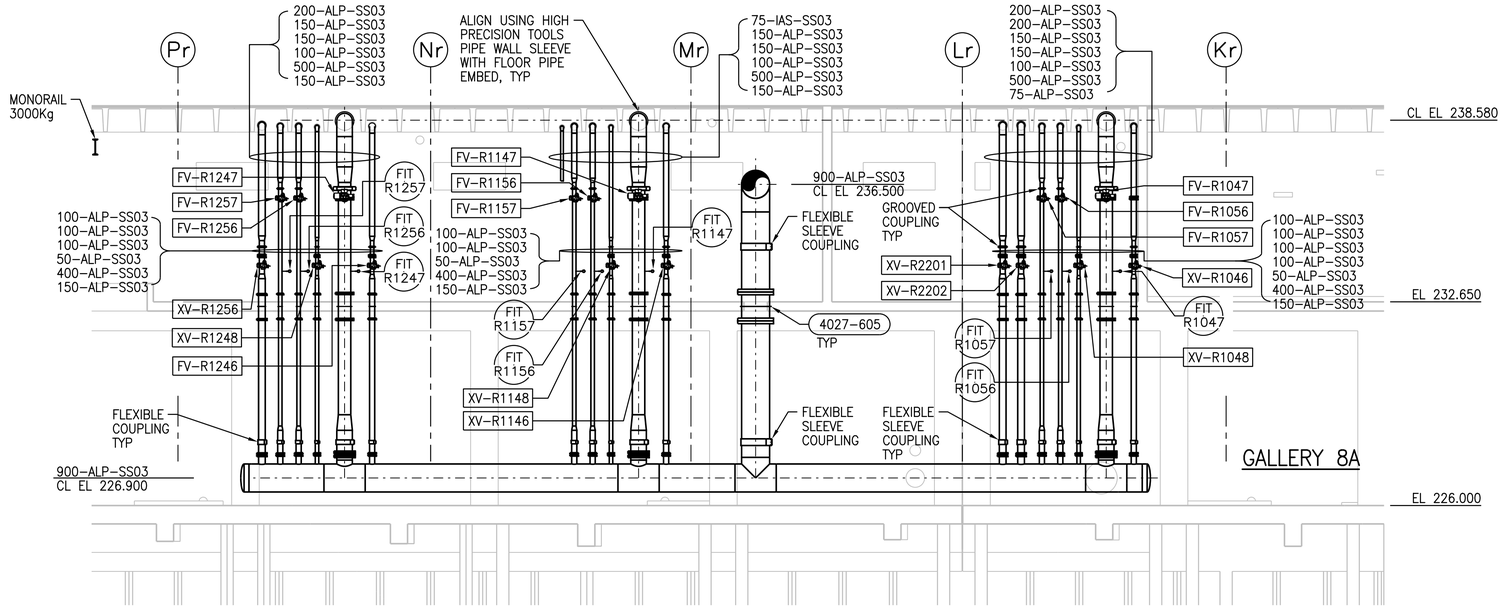

H1 SECTION
1:100
PGAD-R001
PGAD-R005
PGAD-R009
PGAD-R013

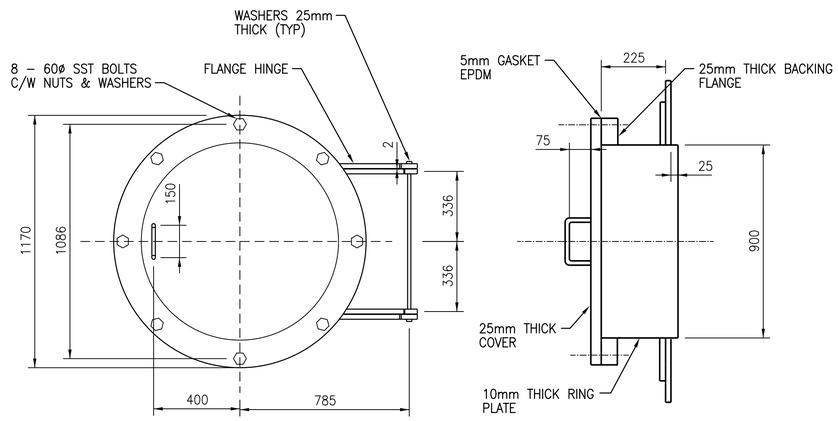

NOTE:

1. ALL IN STAINLESS STEEL 316L, 7mm WATER PRESSURE BY DOUGLAS BARWICK OR EQUAL, MAKE WATER TIGHT.

1 900 DIA ACCESS HATCH
NTS
PGAD-R002
PGAD-R003
PGAD-R004

APEGM
Certificate of Authorization
CH2M HILL Canada Ltd.
No. 1441

NO.	REVISIONS	DATE	DESIGN	CHECK
00	ISSUED FOR TENDER – B.O. 899-2015	01/2016	B.C.	J.C.

CH2MHILL. KGS GROUP SNC·LAVALIN

DESIGNED BY: F. ABSI	CHECKED BY: B. EDGAR
DRAWN BY: B. COOPER	APPROVED BY: H.T. FREIHAMMER
SCALE: 1:100	ISSUED FOR CONSTRUCTION BY: T. TURZAK
DATE: 2016/01/29	DATE: 2016/01/29
CONSULTANT NO.: 474248	

ENGINEER'S SEAL
29/01/2016
PROVINCE OF MANITOBA
F. J. ABSI
Member 36875
REGISTERED PROFESSIONAL ENGINEER

Winnipeg
THE CITY OF WINNIPEG
WATER AND WASTE DEPARTMENT

SOUTH END WATER POLLUTION CONTROL CENTRE
SEWPCC UPGRADING/EXPANSION PROJECT
PROCESS
BIOREACTORS/BLOWER BUILDING
SECTIONS G, H AND H1

CITY DRAWING NUMBER	SHEET	REV.	SIZE
1-0102-PGAD-R017	001	00	A1

PLOT DATE: 1/27/2016
FILE NAME: 1-0102-PGAD-R017.dgn

©CH2M HILL 2015. ALL RIGHTS RESERVED.