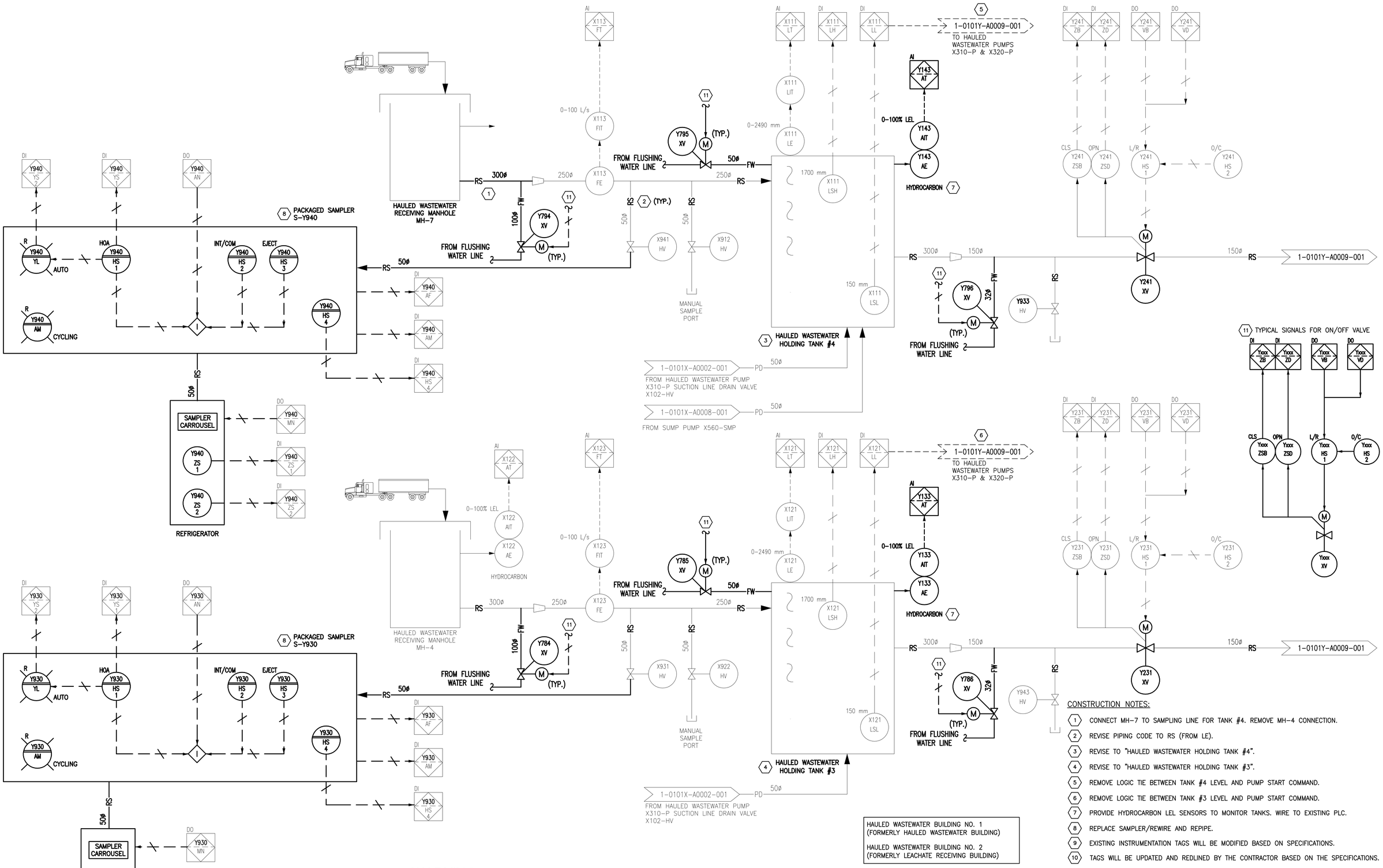

HAULED WASTEWATER BUILDING NO. 1
(FORMERLY HAULED WASTEWATER BUILDING)

HAULED WASTEWATER BUILDING NO. 2
(FORMERLY LEACHATE RECEIVING BUILDING)

CONSTRUCTION NOTES:

1. CONNECT MH-7 TO SAMPLING LINE FOR TANK #4. REMOVE MH-4 CONNECTION.
2. REVISE PIPING CODE TO RS (FROM LE).
3. REVISE TO "HAULED WASTEWATER HOLDING TANK #4".
4. REVISE TO "HAULED WASTEWATER HOLDING TANK #3".
5. REMOVE LOGIC TIE BETWEEN TANK #4 LEVEL AND PUMP START COMMAND.
6. REMOVE LOGIC TIE BETWEEN TANK #3 LEVEL AND PUMP START COMMAND.
7. PROVIDE HYDROCARBON LEL SENSORS TO MONITOR TANKS. WIRE TO EXISTING PLC.
8. REPLACE SAMPLER/REWIRE AND REPIPE.
9. EXISTING INSTRUMENTATION TAGS WILL BE MODIFIED BASED ON SPECIFICATIONS.
10. TAGS WILL BE UPDATED AND REDLINED BY THE CONTRACTOR BASED ON THE SPECIFICATIONS.

WARNING

IF POWER EQUIPMENT OR EXPLOSIVES ARE TO BE USED FOR EXCAVATION ON THIS PROJECT THE CONTRACTOR MUST:
1) NOTIFY THE GAS COMPANY OF THE PROPOSED LOCATION OF EXCAVATION.
2) TAKE PRECAUTION TO AVOID DAMAGE TO GAS COMPANY INSTALLATIONS.
SEE PROVINCIAL REGULATION 140/92 FOR DETAILS

METRIC

WHOLE NUMBERS INDICATE MILLIMETRES
DECIMALIZED NUMBERS INDICATE METRES

APEGM
Certificate of Authorization
Stantec Consulting Ltd.
No. 1301

LOCATION APPROVED
UNDERGROUND STRUCTURES

SUPV. U/G STRUCTURES COMMITTEE — DATE

NOTE:
LOCATION OF UNDERGROUND STRUCTURES AS SHOWN ARE BASED ON THE BEST INFORMATION AVAILABLE BUT NO GUARANTEE IS GIVEN THAT ALL EXISTING UTILITIES ARE SHOWN OR THAT THE GIVEN LOCATIONS ARE EXACT. CONFIRMATION OF EXISTENCE AND EXACT LOCATION OF ALL SERVICES MUST BE OBTAINED FROM THE INDIVIDUAL UTILITIES BEFORE PROCEEDING WITH CONSTRUCTION.

B.M.
ELEV.

NO.	REVISIONS	DATE	BY
3	ISSUED FOR TENDER	16.03.09	D.R.
2	ISSUED FOR TENDER REVIEW	16.03.07	D.R.
1	ISSUED FOR 95% REVIEW	16.01.29	D.R.

Stantec
500-311 Portage Ave, Winnipeg MB Canada
www.stantec.com

DESIGNED BY	S.L.	CHECKED BY	D.R.
DRAWN BY	E.G.D.	APPROVED BY	S.K.B.
HOR. SCALE: VERTICAL:	AS NOTED	RELEASED FOR CONSTRUCTION:	
DATE	2016.01.12	DATE	

ENGINEER'S SEAL
PROVINCE OF MANITOBA — D. L. ROBINSON — 22543 — REGISTERED PROFESSIONAL ENGINEER
2016-03-09

Winnipeg

THE CITY OF WINNIPEG
WATER AND WASTE DEPARTMENT

NORTH END SEWAGE TREATMENT PLANT (NEWPCC)
HAULED LIQUID WASTE FACILITY PHASE II UPGRADE
HAULED WASTEWATER BUILDING 2
PROCESS & INSTRUMENTATION DIAGRAM
RECEIVING MANHOLES & HOLDING TANKS

TENDER NO.	CITY DRAWING NUMBER	SHEET	OF
952-2015	1-0101Y-A0008-001	9	20

-/-

PLOT DATE: 2016 03 08

BID OPPORTUNITY: 952-2015

FILE PATH: V:\1112\active\111216000\0300_drawing\0302_sheet_files\10_instrumentation\
FILE NAME: 1-0101Y-A0008-001.dwg