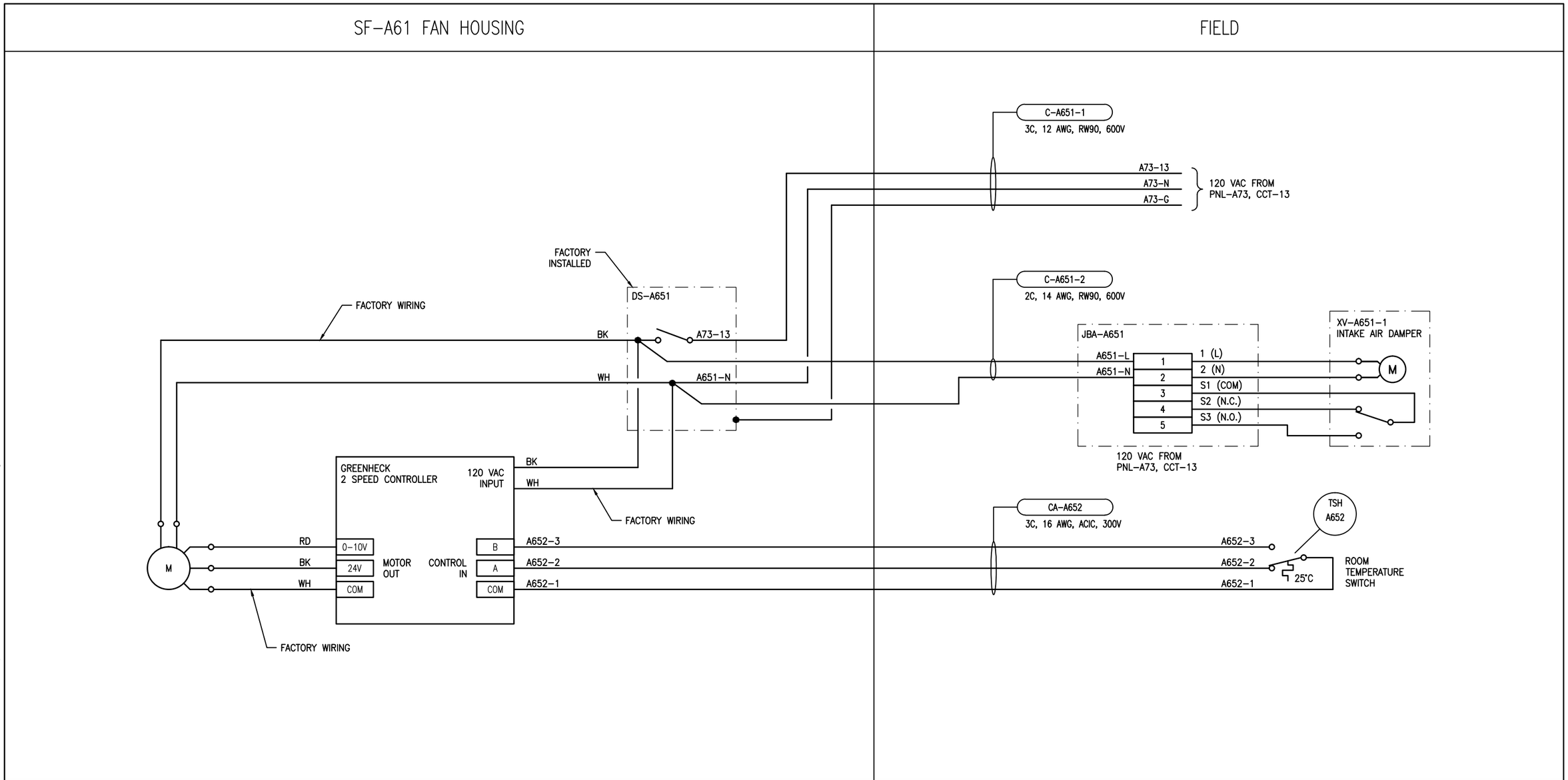

NOTES:

1. FAN TO RUN CONTINUOUSLY.
   ROOM TEMP < 25°C : LOW SPEED
   ROOM TEMP ≥ 25°C : HIGH SPEED
2. PROVIDE AND INSTALL NEW NEMA TYPE 12 JUNCTION BOX COMPLETE WITH TERMINALS AND IDENTIFICATION LAMACOID.

APEGM Certificate of Authorization
SNC-Lavalin Inc.
No. 4489

NO.	REVISIONS	DATE	DESIGN	CHECK
00	ISSUED FOR TENDER, BID OP. 331-2016	2016/05/05	BJC	FA

SNC·LAVALIN

SNC-LAVALIN INC.
148 Nature Park Way
Winnipeg, MB, Canada R3P 0X7
204-786-8080

DESIGNED BY: B. CLEVEN	CHECKED BY: F. ATAEI
DRAWN BY: Y. KONIG	APPROVED BY: I. PARKINSON
SCALE: NTS	DATE: 2016/04/21
ISSUED FOR CONSTRUCTION BY: K. ZUREK	DATE: 2016/05/06
CONSULTANT NO.:	

ENGINEER'S SEAL

ORIGINAL DRAWING
SEALED BY:
B. CLEVEN
SNC-LAVALIN
MEMBER #31479
2016/05/06
REV. 00

Winnipeg

THE CITY OF WINNIPEG
WATER AND WASTE DEPARTMENT

COCKBURN FLOOD AND WASTEWATER PUMPING STATION
2016 UPGRADES
LOOP DIAGRAM
ELECTRICAL ROOM SUPPLY FAN
SF-A65

CITY DRAWING NUMBER	SHEET	REV.	SIZE
1-0127A-A0030	001	00	B

B SIZE - 279mm x 432mm

LAST SAVE: 2016/05/09 - 8:49am
PATH: M:\632354\4ENG\48I&C\DD - General DWG\1-0127A-A0030-001-00.dwg