STEEL MOMENT FRAME SCHEDULE

FR1: W250X54 (49)

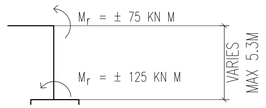

FR2: W250X60

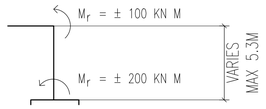

TYP. PROVIDE BP 450X450X37
C/W 4-37øX600LG GALV. ANCHOR BOLTS

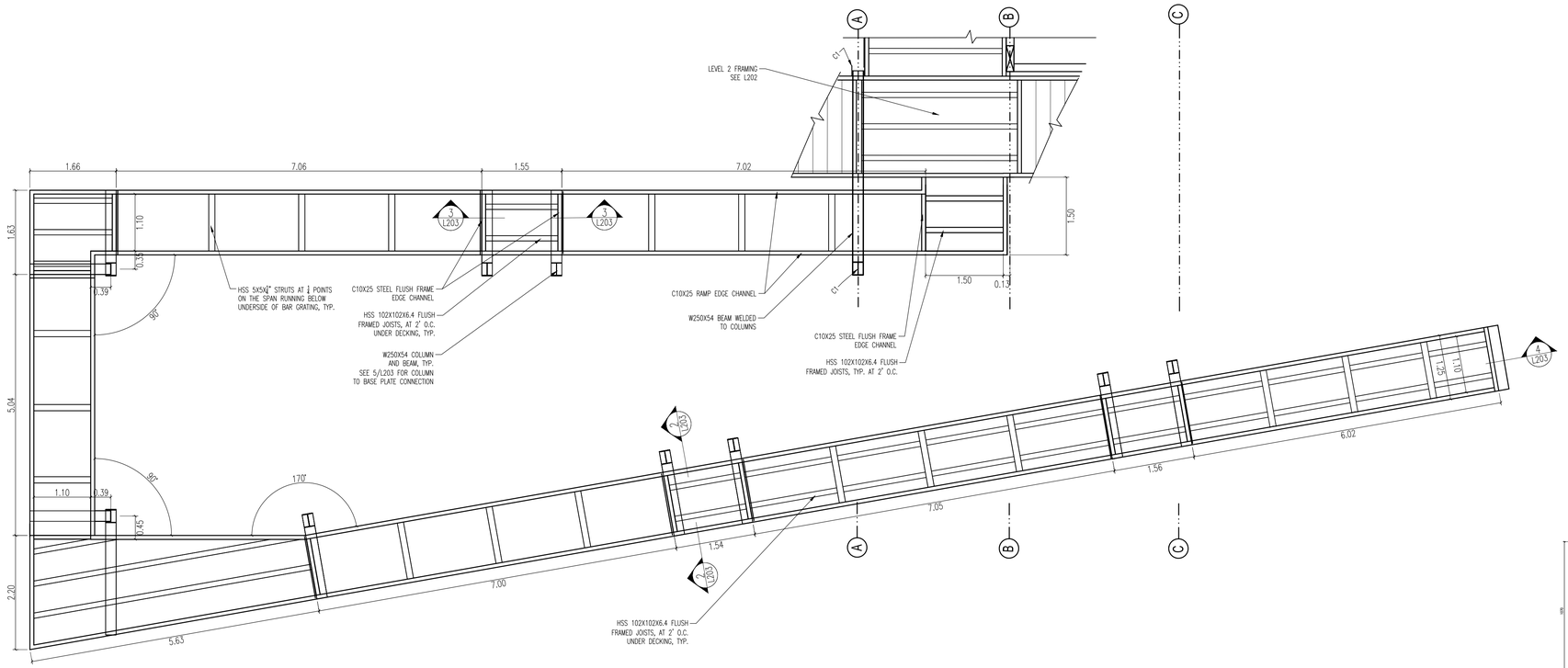

1 RAMP FRAMING PLAN
1:50(at 24X36)

N

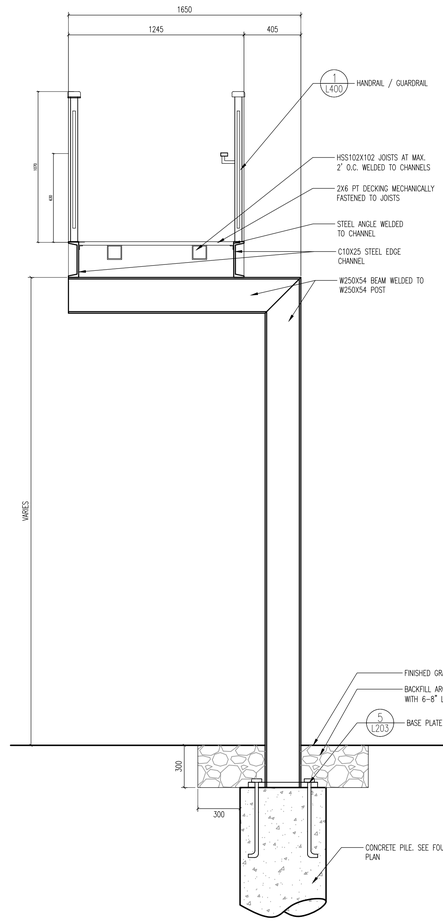

2 RAMP SECTION, TYP.
1:20(at 24X36)

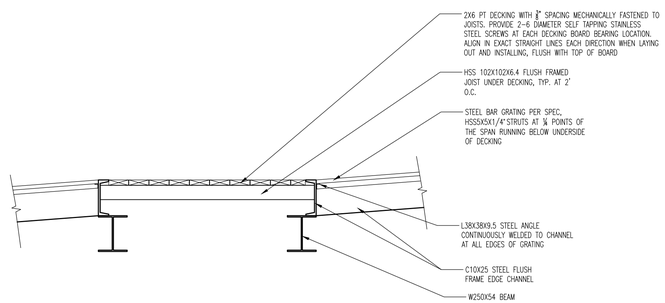

3 RAMP PLATFORM SECTION, TYP.
1:20(at 24X36)

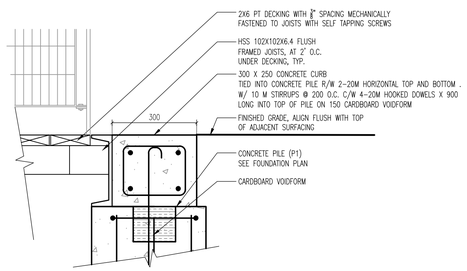

4 RAMP END DETAIL
1:10(at 24X36)

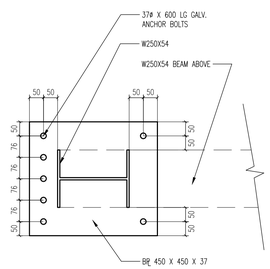

5 BASEPLATE DETAIL
1:10(at 24X36)

No.	DATE	REVISION / ISSUANCE
5	YY.MM.DD	-
4	YY.MM.DD	-
3	YY.MM.DD	-
2	YY.MM.DD	-
1	16.04.15	- ISSUED FOR CONSTRUCTION

Seal

Consultant

PLAIN PROJECTS
LANDSCAPE ARCHITECTURE & ENVIRONMENTAL DESIGN

562 Academy Road / Winnipeg, MB / R3N 0E3
(204) 930 0272 / www.plainprojects.ca

Seal

Consultant

WOLFROM ENGINEERING LTD.

CONSULTING ENGINEERS 345 RAIDILAW AVENUE, WINNIPEG, CANADA R3L 0L5 PHONE: (204) 452-0041 FAX: (204) 284-8680

APEGM
Certificate of Authorization
Wolfrom Engineering Ltd.
No. 1120 Expiry: April 30, 2016

Client

Winnipeg

The City of Winnipeg
Planning, Property and Development Department
15-30 Fort Street, Winnipeg, MB R3C 4X5

Project

ST. VITAL PARK
TOBOGGAN SLIDES & SHELTER

Sheet Title

RAMP PLANS & DETAILS

BID OPPORTUNITY
339-2016

Date
APRIL 2016

Sheet
L203