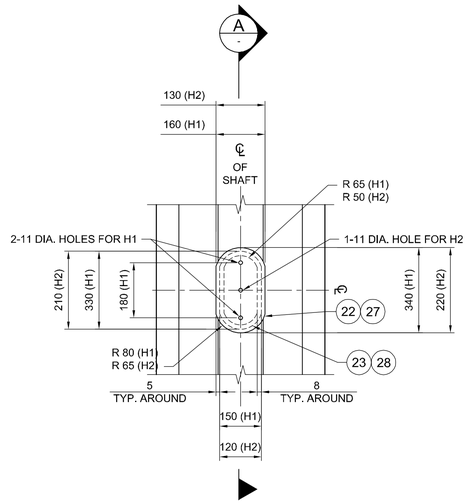

FRONT ELEVATION
1:10

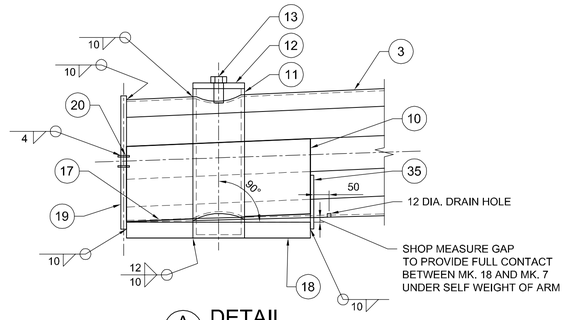

A/080 DETAIL
1:10
SHOWING END OF ARM ONLY

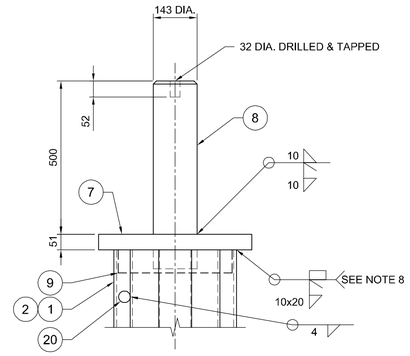

A/080 DETAIL
1:10
SHOWING TOP OF SHAFT ONLY

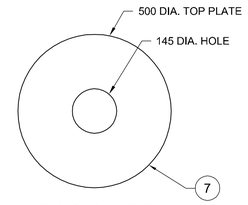

TOP PLATE
1:10

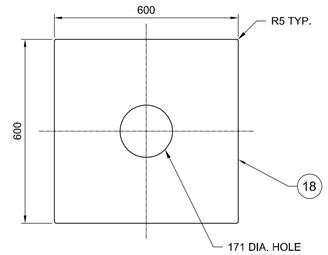

FLANGE PLATE
1:10

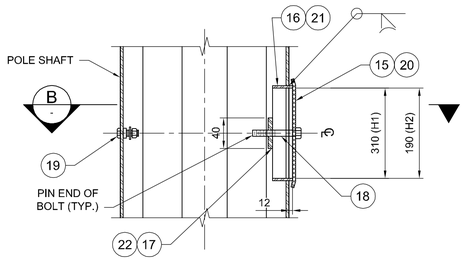

1/- SECTION A-A
1:10

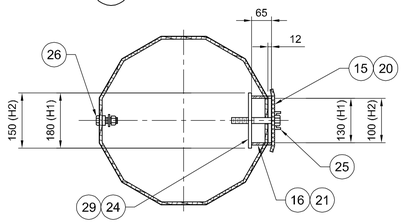

1/- SECTION B-B
1:10

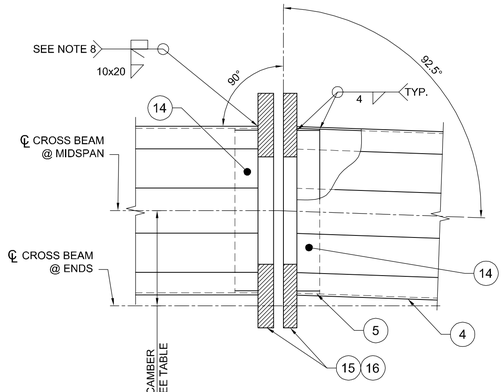

B/080 DETAIL
1:10

CAMBER TABLE	
CAMBER (UNLOADED)	415mm
DEFLECTION DUE TO DEAD LOADS (CROSS ARMS, ATTACHMENTS)	160mm
CAMBER (LOADED)	255mm

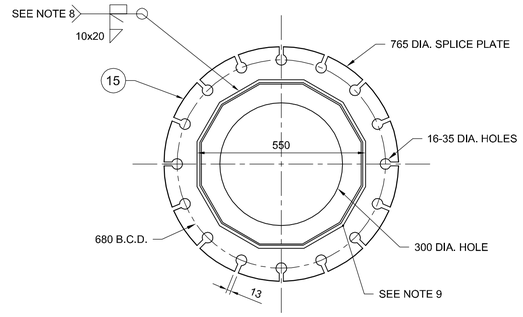

SPLICE PLATE
1:10

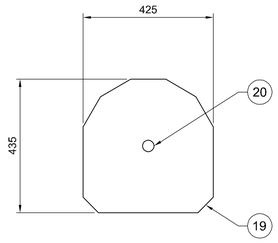

END PLATE
1:10

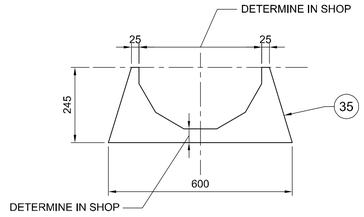

GUSSET PLATE
1:10

NOTE: REFER TO ORIENTATION DETAIL FOR LOCATION OF HANDHOLES. WELDED JOINTS TO COMPLETE REINFORCING RING SHALL BE 100% PENETRATION.

HANDHOLE - MK. H1 & H2
1:10

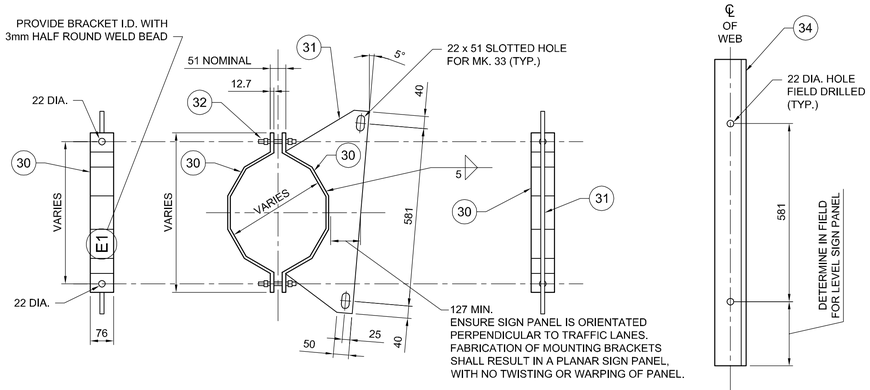

SIGN MOUNTING BRACKET DETAIL
1:10

BILL OF MATERIALS

MK.	QTY.	DESCRIPTION
1	1	DODECAGONAL SHAFT 550 A/F TO 400 A/F x 9.525
2	1	DODECAGONAL SHAFT 550 A/F TO 400 A/F x 9.525
3	1	DODECAGONAL CROSSBEAM 400 A/F TO 550 A/F x 9.525
4	1	DODECAGONAL CROSSBEAM 400 A/F TO 550 A/F x 9.525
5	1	DODECAGONAL CROSSBEAM 550 A/F x 9.525
6	2	BASE PLATE 875 DIA. x 51 THICK
7	2	TOP PLATE 500 O.D. x 145 I.D. x 51 THICK
8	2	SOLID ROUND PIN 143 DIA. x 600 LONG
9	4	BACKUP STRIP 4.76 x75
10	4	GUSSET PLATE 600 x 245 x 19 THICK
11	2	6" SCH. 80 PIPE (168 O.D.) 480 LONG
12	2	PIN PLATE 168 O.D. 19 THICK
* 13	2	HEX HEAD BOLT 32 DIA. SAE GRADE 5 GALV.
14	4	BACK-UP STRIP 6 x 75 (FOR CROSSBEAM)
15	4	SPLICE PLATE 765 DIA. x 51 THICK (GR. 300W)
16	32	32 DIA. BOLTS C/W NUT & 2 WASHERS (ASTM A325 TYPE 1, GALV)
17	2	BACKING BAR 6.35 x 40 x 600 LONG
18	2	FLANGE PLATE 600 SQ. x 51 THICK
19	2	END PLATE 19 THICK
20	4	HALF COUPLING (1½" NOMINAL) ASTM A105 3000 lb
21	40	PLATE WASHER 13 THICK
		HANDHOLE MARK H1 (2 REQUIRED)
22	1	COVER PLATE 11 GA. x 160 x 340 (ASTM A569)
23	1	REINFORCING RING 8 x 65 x 830
* 24	2	CLAMP BAR 6 x 40 x 180
* 25	2	10 DIA. x 140 BOLT S/S (TYPE 316)
* 26	1	GROUND STUD ASSEMBLY 10 DIA. x 40
		HANDHOLE MARK H2 (2 REQUIRED)
27	1	COVER PLATE 11 GA. x 130 x 220 (ASTM A569)
28	1	REINFORCING RING 8 x 65 x 555
* 29	1	CLAMP BAR 6 x 40 x 150
* 25	1	10 DIA. x 140 BOLT S/S (TYPE 316)
* 26	1	GROUND STUD ASSEMBLY 10 DIA. x 40
		SIGN MOUNTING BRACKET (13 REQUIRED)
30	2	CLAMP BAR 12 x 76 (LENGTH TO SUIT)
31	1	BRACKET PLATE 12 THICK
32	2	19 DIA. ASTM F1554 GRADE 55 THREADED ROD C/W 2 A563 GRADE A NUTS & F436 WASHER AND LOCK WASHER (ALL GALVANIZED)
* 33	2	19 DIA. x 50 S/S BOLT (TYPE 316)
34	1	ALUMINUM T-BAR 6061-T6 ASTM B221 102 x 76 x 8 LENGTH TO SUIT SIGN PANEL HEIGHT
35	2	GUSSET PLATE 19 THICK

METRIC

WHOLE NUMBERS INDICATE MILLIMETRES
DECIMALIZED NUMBERS INDICATE METRES

WARNING

IF POWER EQUIPMENT OR EXPLOSIVES USED FOR EXCAVATION ON THIS PROJECT THE CONTRACTOR:

1. NOTIFIED THE GAS COMPANY OF THE PROPOSED LOCATION OF EXCAVATION.
2. TOOK PRECAUTION TO AVOID DAMAGE TO GAS COMPANY INSTALLATIONS SEE PROVINCIAL REGULATION 210/72 FOR DETAILS.
3. OBTAINED EXCAVATION PERMITS PRIOR TO CONSTRUCTION.
4. A MINIMUM VERTICAL SEPARATION OF 300 mm FROM GAS MAINS AND 100 mm FROM GAS SERVICE WAS MAINTAINED BETWEEN ANY MANITOBA HYDRO FACILITY AND ANY NEW INSTALLATIONS.
5. A MINIMUM 900 mm OF COVER WAS MAINTAINED IN ALL AREAS WHERE EQUIPMENT CROSSED, TRAVELED OR COMPACTED OVER THE HIGH PRESSURE GAS MAINS.
6. IF EQUIPMENT CROSSED, TRAVELED, OR COMPACTED OVER THE GAS MAIN WITH LESS THAN THE MINIMUM DEPTH COVER, EARTH BRIDGING OR STEEL PLATES WERE PLACED OVER THE MAIN AND EXTENDED A MINIMUM OF 1.0 METRE ON EITHER SIDE AT EACH CROSSING LOCATION.

*NOTES ON BILL OF MATERIALS:

1. MARK NO. 33 C/W NUT, 2 WASHERS AND 1 LOCKWASHER
2. MARK NO. 24 & 29 C/W 8-DIA. PUNCHED 10 N.C. TAPPED AT THE CENTER OF PLATE.
3. MARK NO. 25 C/W CUP WASHER.
4. MARK NO. 26 C/W 2-10 DIA. HEX NUT, 2-TERMINAL WASHER & 1-LOCKWASHER.
5. MARK NO. 13 C/W THREAD-LOCKER SUCH AS LOCK-TITE BLUE OR APPROVED EQUIVALENT

APEGM
Certificate of Authorization
Dillon Consulting Limited (MB)
No. 1789 Date: 2017/01/09

NO.	REVISIONS	DATE	BY
0	ISSUED FOR TENDER	17/01/09	DA

DILLON CONSULTING

DESIGNED BY	DRA	CHECKED BY	SSR
DRAWN BY	MDG	APPROVED BY	DBW
HOR. SCALE	AS SHOWN	RELEASED FOR CONSTRUCTION	
VERTICAL	AS SHOWN		
DATE		DATE	

ENGINEER'S SEAL
PROVINCE OF MANITOBA
D.R.C. AMORIM
Member 33215
REGISTERED PROFESSIONAL ENGINEER

CONSULTANT PROJECT NUMBER
16-3353

Winnipeg
THE CITY OF WINNIPEG
PUBLIC WORKS DEPARTMENT

WAVERLEY STREET UNDERPASS AT CN MILE 3.89 RIVERS SUB
CONTRACT 2: UNDERPASS STRUCTURE, RAILWORKS, ROADWORKS, LAND DRAINAGE SEWER, PUMPING STATION AND LANDSCAPING WORKS

S785 - FABRICATION DETAILS 2

CITY DRAWING NUMBER: U-239-2016-C2-CS-081
SHEET 081 OF 085
CONSULTANT DRAWING NUMBER: C2-CS-081

G:\CAD\163353\Technical Workspace\Engineering\Drawings and Figures\Structures\Contract\163353-C2-CON-CS-OHSS-S785.dwg