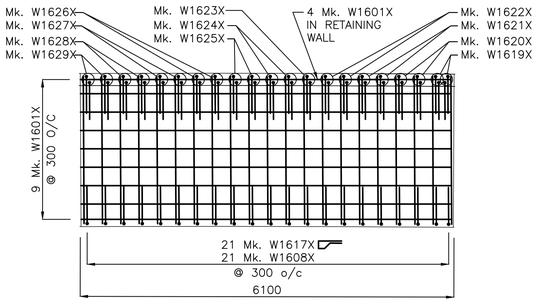

1 / 44 45 DETAIL 1:50

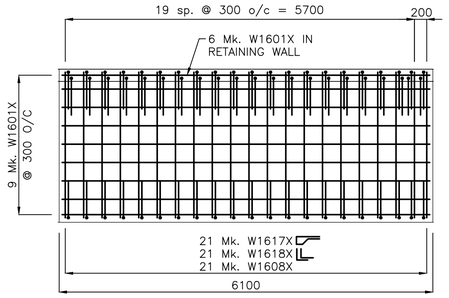

2 / 44 45 DETAIL – TYPE A TYP. OF 2 1:50

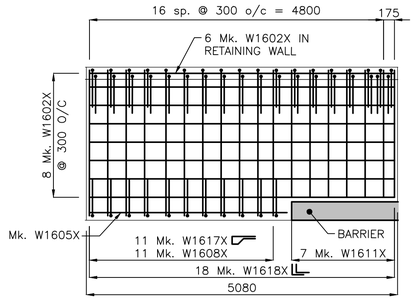

3 / 44 45 DETAIL 1:50

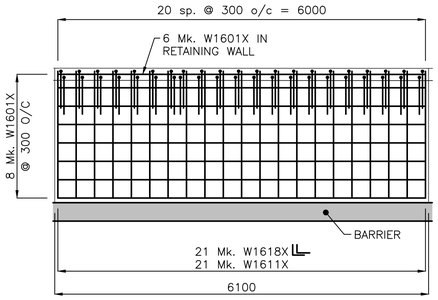

4 / 44 45 DETAIL – TYPE B TYP. OF 12 1:50

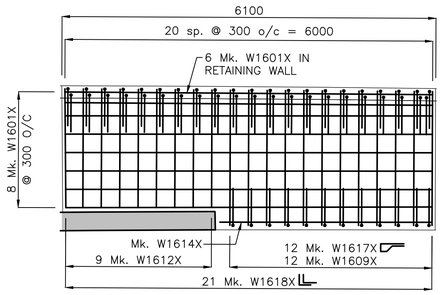

5 / 44 45 DETAIL 1:50

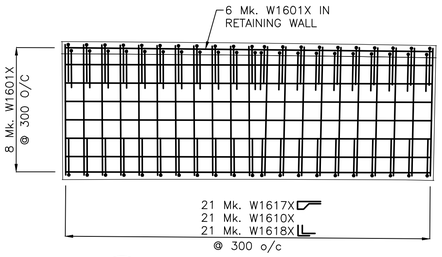

6 / 44 45 DETAIL – TYPE C TYP. OF 5 1:50

BILL OF REINFORCING STEEL

WEST SIDEWALKS AND CURBS

STRAIGHT BARS			
MARK	QTY.	LENGTH (mm)	MASS (kg)
W1601X	342	6000	3221.6
W1602X	14	5965	131.1
W1603X	34	5955	317.9
W1604X	14	5945	121.9
W1605X	1	3225	5.1
W1606X	17	3030	80.9
W1607X	46	2575	186.0
W1608X	74	2375	275.9
W1609X	12	2200	41.4
W1610X	105	2100	346.2
W1611X	252	2065	817.0
W1612X	9	1920	27.1
W1613X	84	1825	240.7
W1614X	1	3460	5.4
W1615X	2	2700	8.5
W1616X	2	1935	6.1

BENT BARS									
MARK	QTY.	TYPE	A	B	C	D	E	LENGTH (mm)	MASS (kg)
W1617X	191	B	310	1110	190	450	600	2660	797.7
W1618X	1128	A	600	615				1215	2151.7
W1619X	4	A	600	605				1205	7.6
W1620X	4	A	600	595				1195	7.5
W1621X	4	A	600	565				1165	7.3
W1622X	4	A	600	535				1135	7.1
W1623X	4	A	600	505				1105	6.9
W1624X	4	A	600	475				1075	6.8
W1625X	4	A	600	445				1045	6.6
W1626X	4	A	600	415				1015	6.4
W1627X	4	A	600	385				985	6.2
W1628X	4	A	600	355				955	6.0
W1629X	4	A	600	325				925	5.8
W1620X	4	A	600	590				1190	7.5
W1620X	4	A	600	560				1160	7.3
W1620X	4	A	600	530				1130	7.1
W1620X	4	A	600	500				1100	6.9
W1620X	4	A	600	465				1065	6.7
W1620X	4	A	600	430				1030	6.5
W1620X	4	A	600	400				1000	6.3
W1620X	4	A	600	370				970	6.1
W1620X	4	A	600	340				940	5.9
W1620X	4	A	600	315				915	5.7

TOTAL MASS OF MMFX STEEL REINFORCING = 8922.4 kg.

BAR TYPES

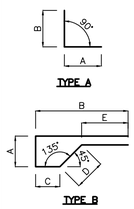

NOTE:

1. All dimensions given in bending diagram are out to out, except raddii. radii are inside dimensions. all reinforcing steel bends and hooks shall conform to clause 6.6.2 of C.S.A. A23.1–04, unless noted otherwise in the BILL OF REINFORCING STEEL.
2. All reinforcing steel shall be deformed steel, unless noted otherwise in the BILL OF REINFORCING STEEL.
3. Like bars shall be bundled, securely tied and identified as to mark and site no. by appropriate means. all other items to be identified in a similar fashion.
4. Unless otherwise noted, pin diameters shall be similar at all bends and hooks of a bar in accordance with the following detail:

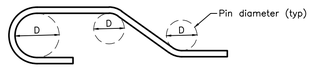

DOWEL & SLEEVE ASSEMBLY

MARK	DESCRIPTION	MASS PER UNIT (kg)	QTY.	MASS (kg)
PD1	25ø x 550 LG. GALV. PLAIN DOWEL	2.12	189	400.7
BV1	32 O.D. x 300 LG. GALV. EXPANSION SLEEVE	N/A	189	N/A

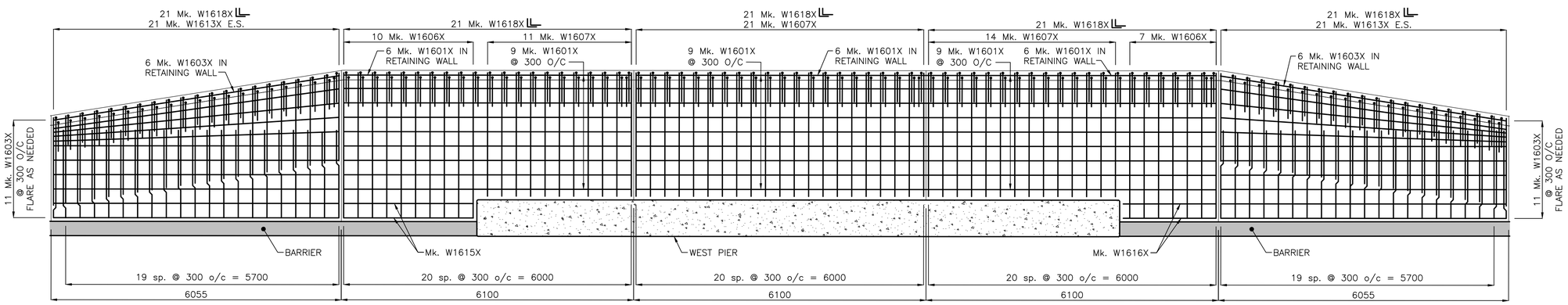

7 / 44 45 DETAIL 1:50

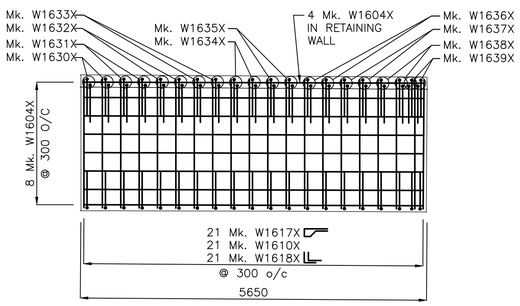

8 / 44 45 DETAIL 1:50

APEGM
Certificate of Authorization
Stantec Consulting Ltd.
No. 1301

METRIC
WHOLE NUMBERS INDICATE MILLIMETRES
DECIMALIZED NUMBERS INDICATE METRES
UNLESS INDICATED OTHERWISE

LOCATION APPROVED
UNDERGROUND STRUCTURES

SUPV. U/G STRUCTURES COMMITTEE — DATE

NOTE:
LOCATION OF UNDERGROUND STRUCTURES AS SHOWN ARE BASED ON THE BEST INFORMATION AVAILABLE BUT NO GUARANTEE IS GIVEN THAT ALL EXISTING UTILITIES ARE SHOWN OR THAT THE GIVEN LOCATIONS ARE EXACT. CONFIRMATION OF EXISTENCE AND EXACT LOCATION OF ALL SERVICES MUST BE OBTAINED FROM THE INDIVIDUAL UTILITIES BEFORE PROCEEDING WITH CONSTRUCTION.

B.M. ELEV.

NO.	REVISIONS	DATE	BY
0	ISSUED FOR TENDER	16.07.04	K.A.

Stantec
500 - 311 Portage Avenue, Winnipeg MB Canada
www.stantec.com

DESIGNED BY	S.Y.	CHECKED BY	K.S.A.
DRAWN BY	J.M.B.	APPROVED BY	B.J.W.
HOR. SCALE: VERTICAL:	1:750	RELEASED FOR CONSTRUCTION:	
DATE	2016.07.04	DATE	

ENGINEER'S SEAL

CONSULTANT DRAWING NO.
S-129

Winnipeg
THE CITY OF WINNIPEG
PUBLIC WORKS DEPARTMENT
ENGINEERING DIVISION

2016 REGIONAL STREET PROGRAM
ARCHIBALD STREET
UNDERPASS REHABILIATION
WEST SIDEWALK REINFORCING DETAILS

SHEET 45 OF 62
CAD FILE DRAWING NUMBER 06880s–128–884.dwg
CITY DRAWING NUMBER U205-16-45

V:\1137\active\113776980\0200_drawing\0302_sheet_files\03_structural\06880s-128-884.dwg
2016/07/05 1:53 PM By: Bennett, Zenon