A1 SIZE – 594mm x 841mm

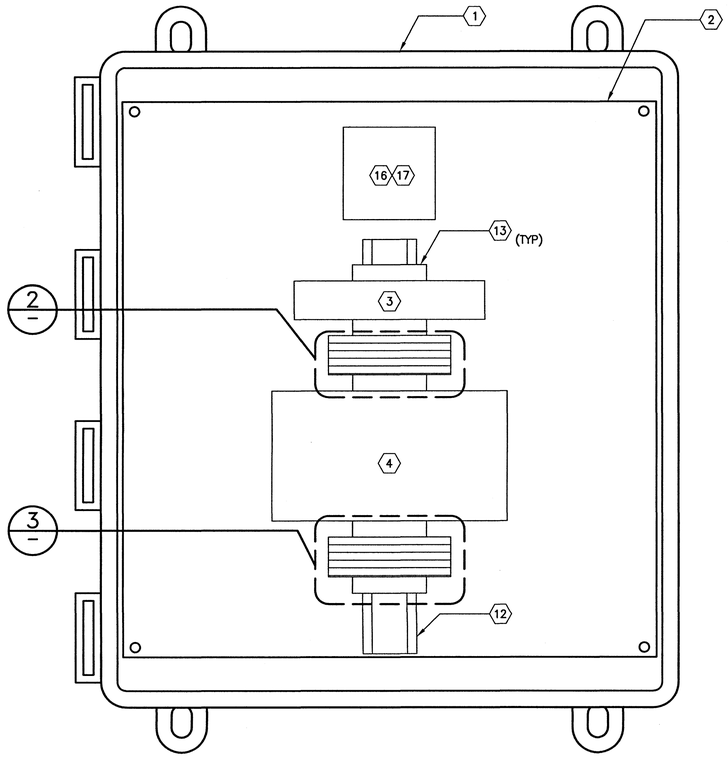


1 PANEL NP–S901 – FRONT VIEW
SCALE: 1:2mm

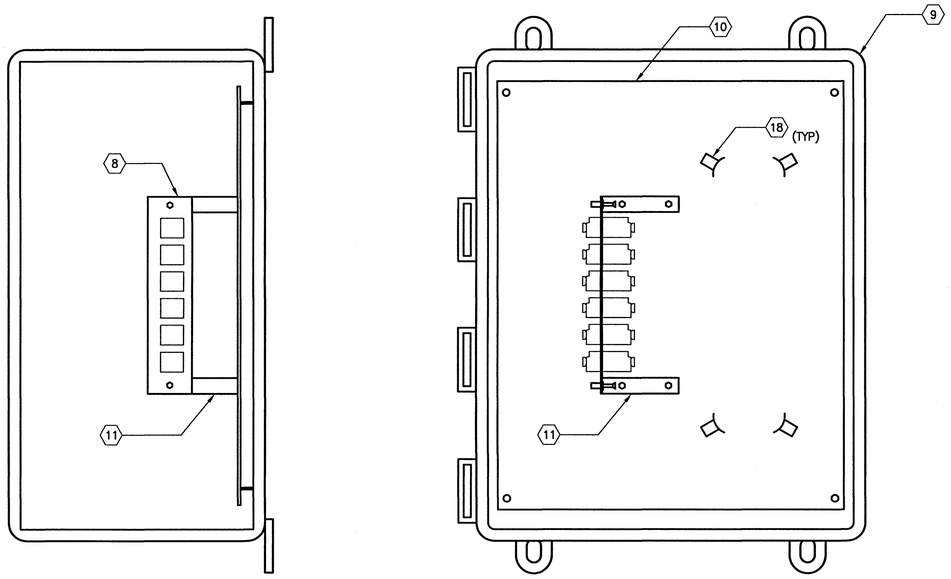


SIDE VIEW

FRONT VIEW

4 PANEL NP–Z900 ENCLOSURE
SCALE: 1:2mm

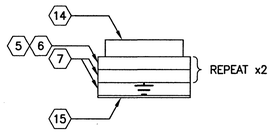


2 TB01–120V AC POWER TERMINAL STRIP ARRANGEMENT
SCALE: N.T.S.

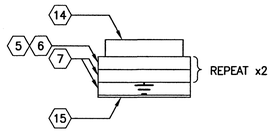


3 TB02–24V DC POWER TERMINAL STRIP ARRANGEMENT
SCALE: N.T.S.

NOTES:

1. POWER SUPPLIED FROM EXISTING 120V UPS.
2. CUT DIN RAIL TO SUIT.

NETWORKING ENCLOSURE BILL OF MATERIALS

| ITEM | QUANTITY | PART NUMBER | MANUFACTURER | DESCRIPTION | NOTES |
|---|---|---|---|---|---|
| 1 | 1 | A16148CHQRFG | PENTAIR | 406mm x 356mm x 203mm ENCLOSURE | |
| 2 | 1 | A16P14AL | PENTAIR | 375mm x 327mm PANEL | |
| 3 | 1 | 2L–2ES–25C | RED LION | MEDIA CONVERTER WITH SL CONNECTION | |
| 4 | 1 | ABL8RPS24100 | SCHNEIDER ELECTRIC | 24VDC POWER SUPPLY | |
| 5 | AS REQ. | 3046142 | PHOENIX CONTACT | FUSED TERMINAL | |
| 6 | AS REQ | 3046806 | PHOENIX CONTACT | FUSED CONNECTOR | |
| 7 | AS REQ. | 3046184 | PHOENIX CONTACT | FEED THROUGH TERMINAL | |
| 8 | 1 | FSPLC6 | HUBBELL | 6 PORT LC DUPLEX ADAPTER PANEL | |
| 9 | 1 | A12106CHQRFG | PENTAIR | 305mm x 254mm x 152mm ENCLOSURE | |
| 10 | 1 | A12P10AL | PENTAIR | 273mm x 226mm PANEL | |
| 11 | 2 | | | 64mm L–BRACKET | |
| 12 | AS REQ. | 1206421 | PENTAIR | 7.5mm x 35mm x 2000mm PERFORATED DIN RAIL | 2 |
| 13 | AS REQ. | 1201442 | PHOENIX CONTACT | TERMINAL END CLAMP | |
| 14 | AS REQ. | 1004348 | PHOENIX CONTACT | TERMINAL BLOCK MARKER | |
| 15 | AS REQ. | 3047141 | PHOENIX CONTACT | TERMINAL END PLATE | |
| 16 | 1 | ISB2 | HUBBELL | SURFACE MOUNT BOX – 2 PORT | |
| 17 | 2 | HXJ6B | HUBBELL | CAT6 RJ45 JACK | |
| 18 | 1 | FBRMGT CL PK4 | HUBBELL | PACK OF 4 FIBRE CABLE MANAGEMENT CLIPS | |

APEGM
Certificate of Authorization
KGS Group
No. 245

B.M. –
ELEV. –

| NO. | REVISIONS | DATE | DESIGN | CHECK |
|---|---|---|---|---|
| 00 | ISSUED FOR CONSTRUCTION | 2016/09/02 | DDW | JAB |

KGS GROUP CONSULTING ENGINEERS

DESIGNED BY: C. S. ROBINSON
CHECKED BY: J.A. BOUCHARD
DRAWN BY: J. P. DELEON
APPROVED BY: J.A. BOUCHARD
SCALE: AS NOTED
ISSUED FOR CONSTRUCTION BY:
DATE: 2016/08/10
DATE:
CONSULTANT NO.: 15–0107–019_E41

ENGINEER'S SEAL
PROVINCE OF MANITOBA
BOUCHARD
Member
20560
REGISTERED PROFESSIONAL ENGINEER
16/09/02

Winnipeg
THE CITY OF WINNIPEG
WATER AND WASTE DEPARTMENT

WEST END SEWAGE TREATMENT PLANT
EFFLUENT MONITORING STATION
NETWORKING
LAYOUT AND BILL OF MATERIALS
PNL NP–S901 AND NP–Z900

| CITY DRAWING NUMBER | SHEET | REV. | SIZE |
|---|---|---|---|
| 1–0103–ACBD–S001 | | 00 | A1 |

PLOT DATE: Sep 02, 2016 – 3:02pm
FILE NAME: 15–0107–019_E41.dwg

FileName: P:\Projects\2015\15-0107-019\Dwg\Elec\15-0107-019_E41.dwg – Tab: E41 Plotted By: dderoche 09/02/2016 [Fri 3:02pm]