A1 SIZE – 594mm x 841mm

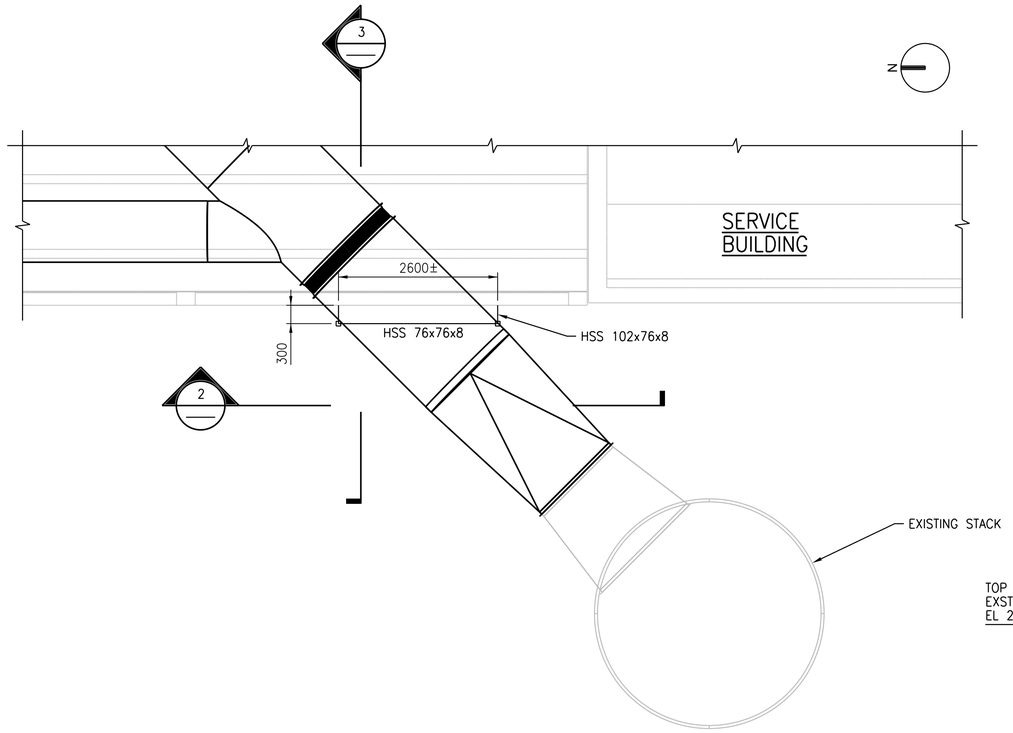

1 PLAN DETAIL
1:50
MGAD-G605

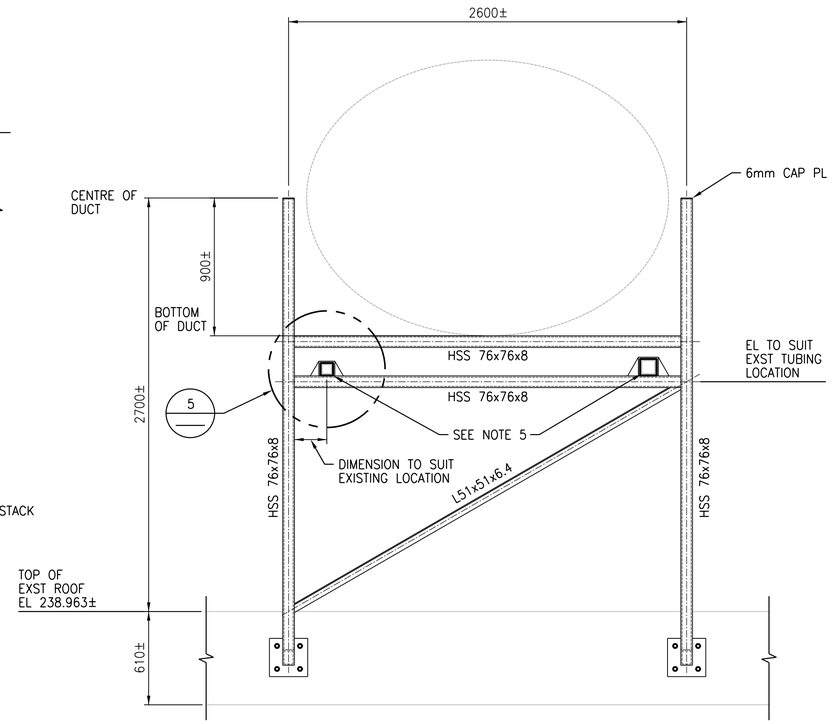

FRONT ELEVATION

2 DETAIL
1:20

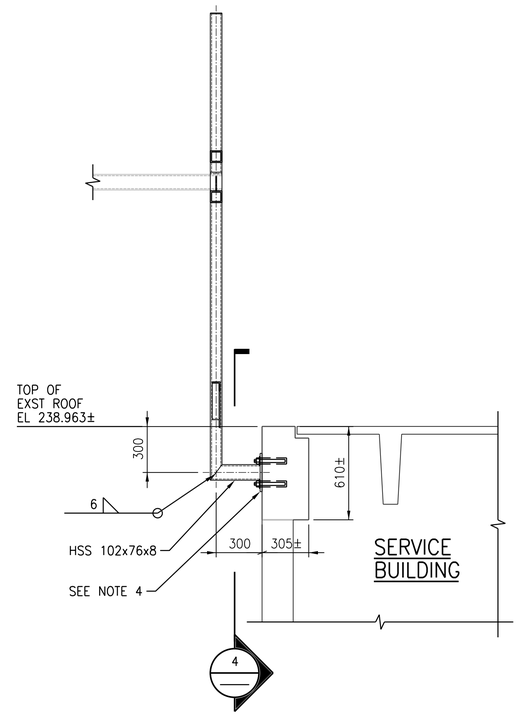

3 DETAIL
1:20

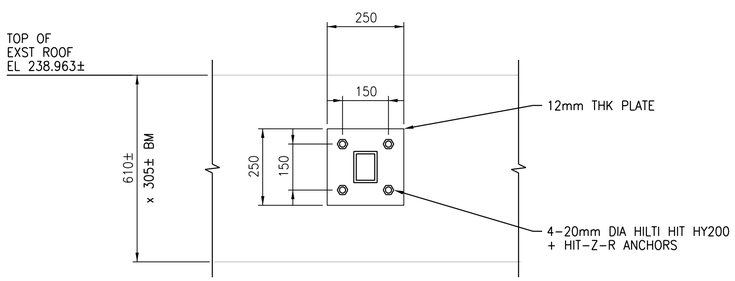

4 DETAIL
1:20

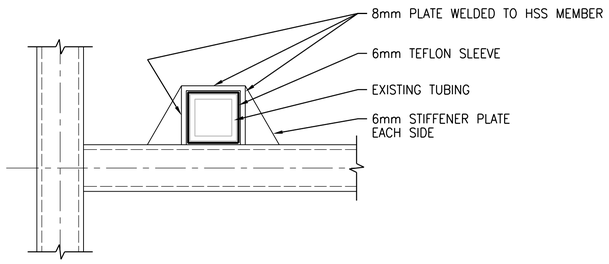

5 DETAIL
1:5

NOTES:

1. ALL STRUCTURAL STEEL TO BE HOT DIPPED GALVANIZED.
2. ALL FASTENERS TO BE SST GRADE 316.
3. CONTRACTOR TO FIELD MEASURE ALL DIMENSIONS PRIOR TO FABRICATION.
4. FOR STONE REMOVAL AND REPAIR SEE DRAWING BDTL-A006.
5. RECONNECT EXISTING 100x100x6 GALVANIZED TUBING TO NEW SUPPORT.

APEGM
Certificate of Authorization
CH2M HILL Canada Ltd.
No. 1441

NO.	REVISIONS	DATE	DESIGN	CHECK
00	ISSUED FOR CONSTRUCTION – 976-2016	2017/04/05	G.O.	J.C.

CH2MHILL
SNC·LAVALIN
KGS GROUP

DESIGNED BY: T. MYSOREWALA	CHECKED BY: E. LUI
DRAWN BY: G. OMORI	APPROVED BY: H.T. FREIHAMMER
SCALE: AS NOTED	ISSUED FOR CONSTRUCTION BY: J. SHUMKA
DATE: 2017/04/05	DATE: 2017/04/05
CONSULTANT NO.: 474248	

ENGINEER'S SEAL
APR 5, 2017
PROVINCE OF MANITOBA
LUI
Member
37003
REGISTERED PROFESSIONAL ENGINEER

Winnipeg
THE CITY OF WINNIPEG
WATER AND WASTE DEPARTMENT

SOUTH END WATER POLLUTION CONTROL CENTRE
SEWPCC UPGRADING/EXPANSION PROJECT
STRUCTURAL
ODOUR CONTROL
DETAILS (4)

CITY DRAWING NUMBER	SHEET	REV.	SIZE
1-0102-SDTL-A028		00	A1

PLOT DATE: 2017\03\29
FILE NAME: 1-0102-SDTL-A028.dgn

©CH2M HILL 2017. ALL RIGHTS RESERVED.