A1 SIZE – 594mm x 841mm

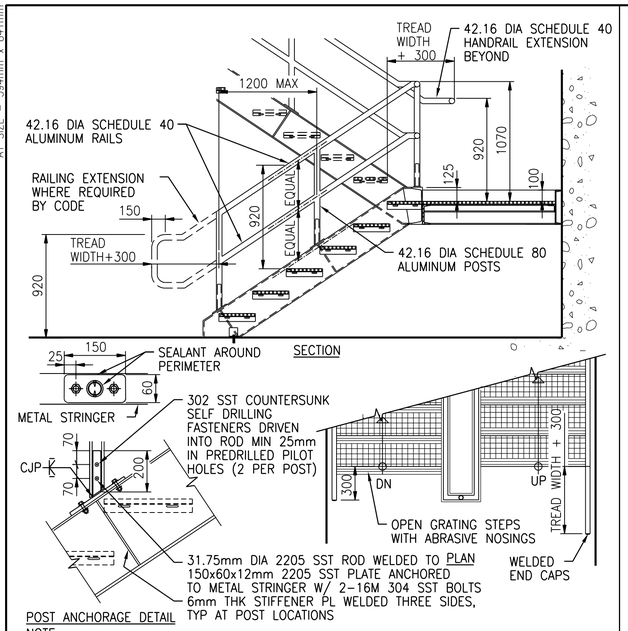

NOTE:
MINIMUM YIELD STRENGTH OF SST ROD AND PLATE TO BE 450 KPa. WELD ROD AND PLATE WITH A FILLER METAL OF MATCHING OR GREATER YIELD STRENGTH

POST ANCHORAGE – OPEN GRATING METAL STAIR WITH TUBE RAILING

NTS (0552-804)

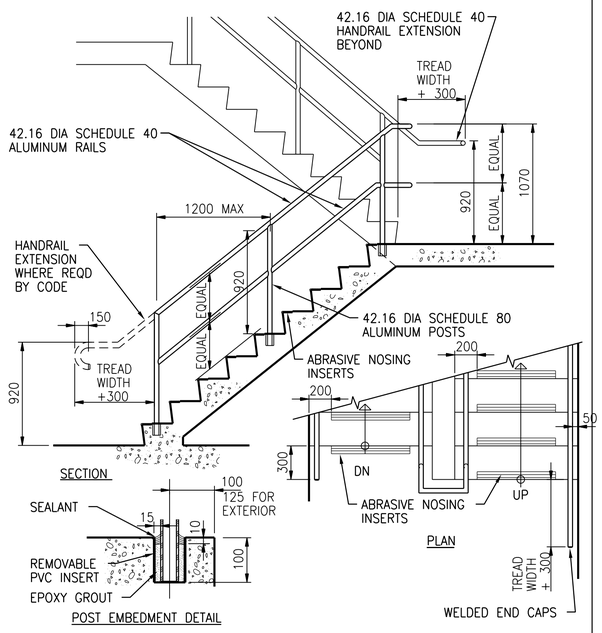

POST EMBEDMENT – PIPE RAILING ON CONCRETE STAIRS (1000 AND WIDER)

NTS (0552-806)

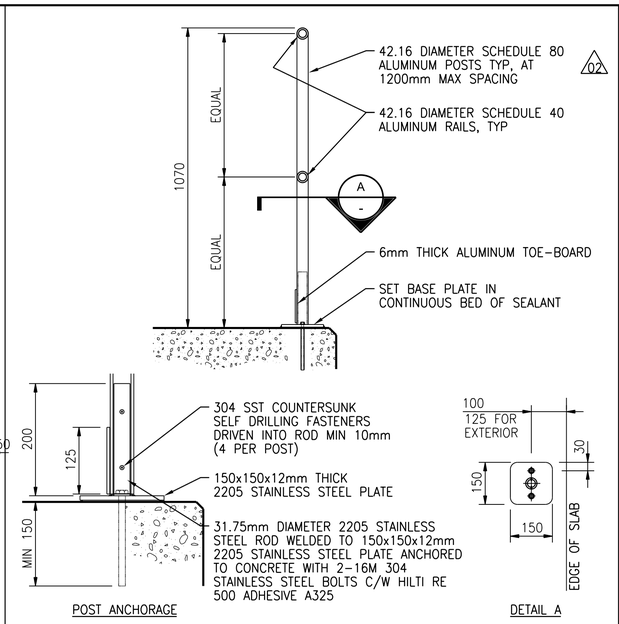

NOTE:
MINIMUM YIELD STRENGTH OF STAINLESS STEEL ROD AND PLATE TO BE 450 KPa. WELD ROD AND PLATE WITH A FILLER METAL OF MATCHING OR GREATER YIELD STRENGTH

POST ANCHORAGE – SURFACE MOUNTED GUARD

NTS (0552-810)

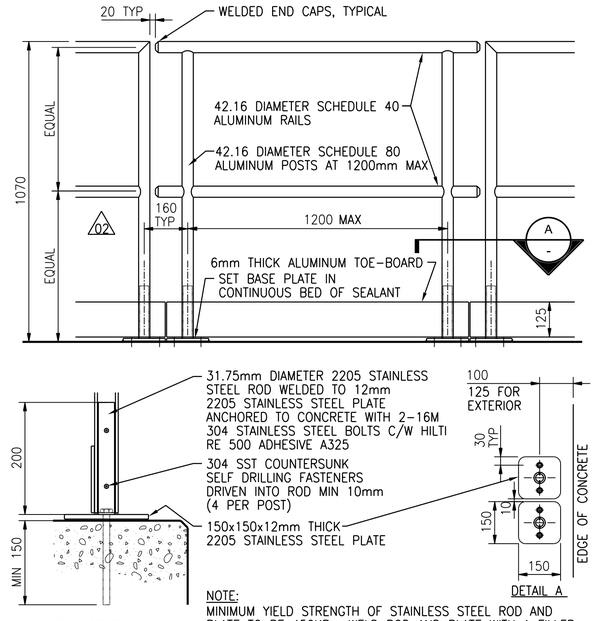

NOTE:
MINIMUM YIELD STRENGTH OF STAINLESS STEEL ROD AND PLATE TO BE 450KPa. WELD ROD AND PLATE WITH A FILLER METAL OF MATCHING OR GREATER YIELD STRENGTH

POST ANCHORAGE – REMOVABLE ALUMINUM GUARD (SURFACE MOUNTED)

NTS (0552-811)

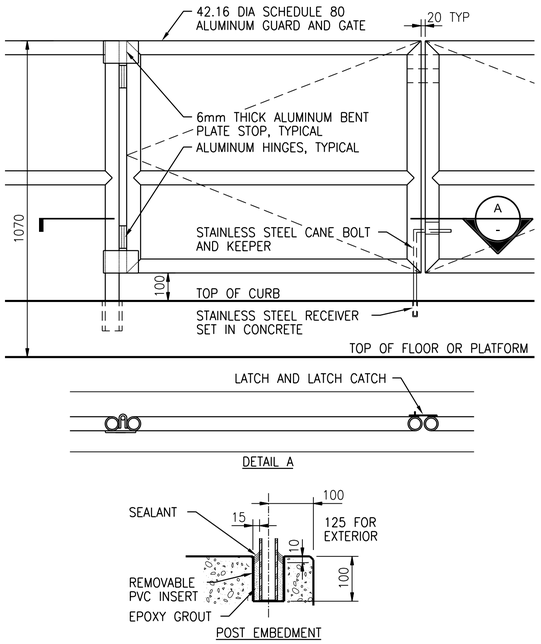

POST EMBEDMENT – HINGED DOUBLE GATE PIPE RAILING (MAX 2000)

NTS (0552-814)

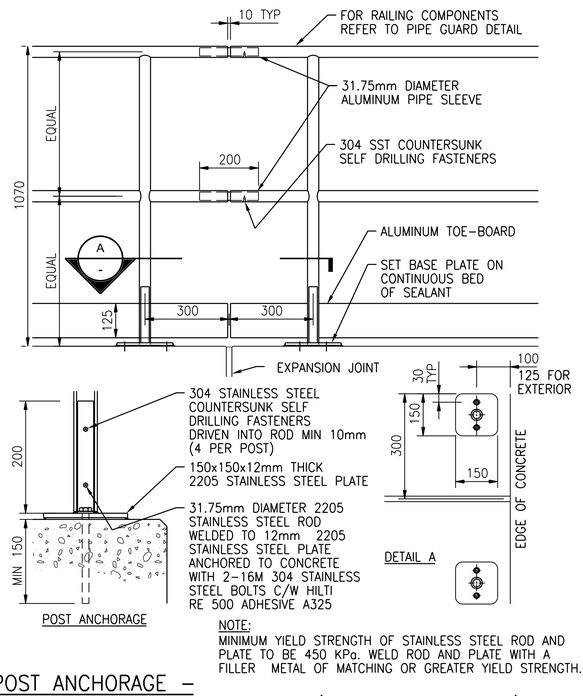

NOTE:
MINIMUM YIELD STRENGTH OF STAINLESS STEEL ROD AND PLATE TO BE 450 KPa. WELD ROD AND PLATE WITH A FILLER METAL OF MATCHING OR GREATER YIELD STRENGTH.

POST ANCHORAGE – PIPE RAILING EXPANSION JOINT (SURFACE MOUNTED)

NTS (0552-815)

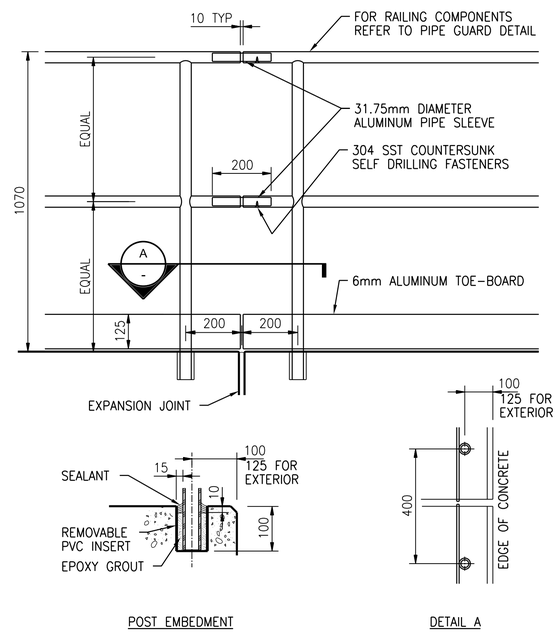

POST ANCHORAGE – PIPE RAILING EXPANSION JOINT (EMBEDDED)

NTS (0552-816)

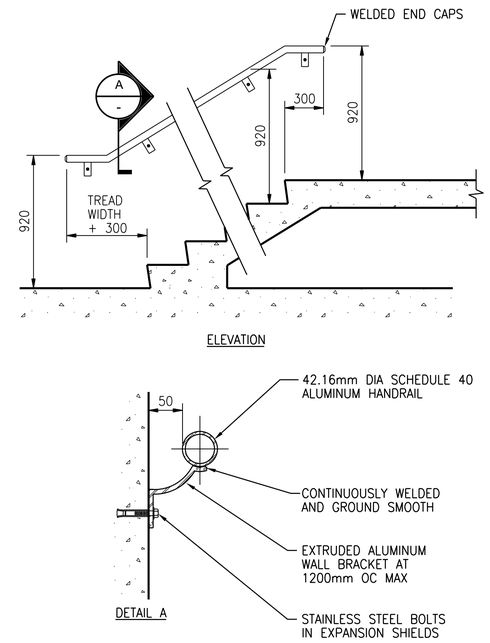

WALL MOUNTED PIPE HANDRAIL

NTS (0552-019)

©CH2M HILL 2017. ALL RIGHTS RESERVED.

APEGM
Certificate of Authorization
CH2M HILL Canada Ltd.
No. 1441

NO.	REVISIONS	DATE	DESIGN	CHECK
04	ISSUED FOR CONSTRUCTION – 976-2016	2017/04/05	G.O.	J.C.
03	ISSUED FOR CONSTR – B.O. 899-2015	04/2016	G.O.	J.C.
02	ISSUED FOR TENDER – B.O. 899-2015	01/2016	G.O.	J.C.
01	ISSUED FOR CONSTRUCTION	10/2015	G.O.	J.C.
00	ISSUED FOR TENDER	08/2015	G.O.	J.C.

CH2MHILL. KGS GROUP SNC·LAVALIN

DESIGNED BY: J. THANNICKAL
CHECKED BY: E. LUI
DRAWN BY: G.OMORI
APPROVED BY: H.T. FREIHAMMER
SCALE: NTS
ISSUED FOR CONSTRUCTION BY: J. SHUMKA
DATE: 2017/04/05
DATE: 2017/04/05
CONSULTANT NO.: 474248

ENGINEER'S SEAL
APR 5, 2017
PROVINCE OF MANITOBA
LUI
Member
37003
REGISTERED PROFESSIONAL ENGINEER

Winnipeg
THE CITY OF WINNIPEG
WATER AND WASTE DEPARTMENT

SOUTH END WATER POLLUTION CONTROL CENTRE
SEWPCC UPGRADING/EXPANSION PROJECT
STRUCTURAL
STANDARD DETAILS (11)

CITY DRAWING NUMBER	SHEET	REV.	SIZE
1-0102-SDTL-A012		04	A1

PLOT DATE: 2017\03\29
FILE NAME: 1-0102-SDTL-A012.dgn