A1 SIZE – 594mm x 841mm

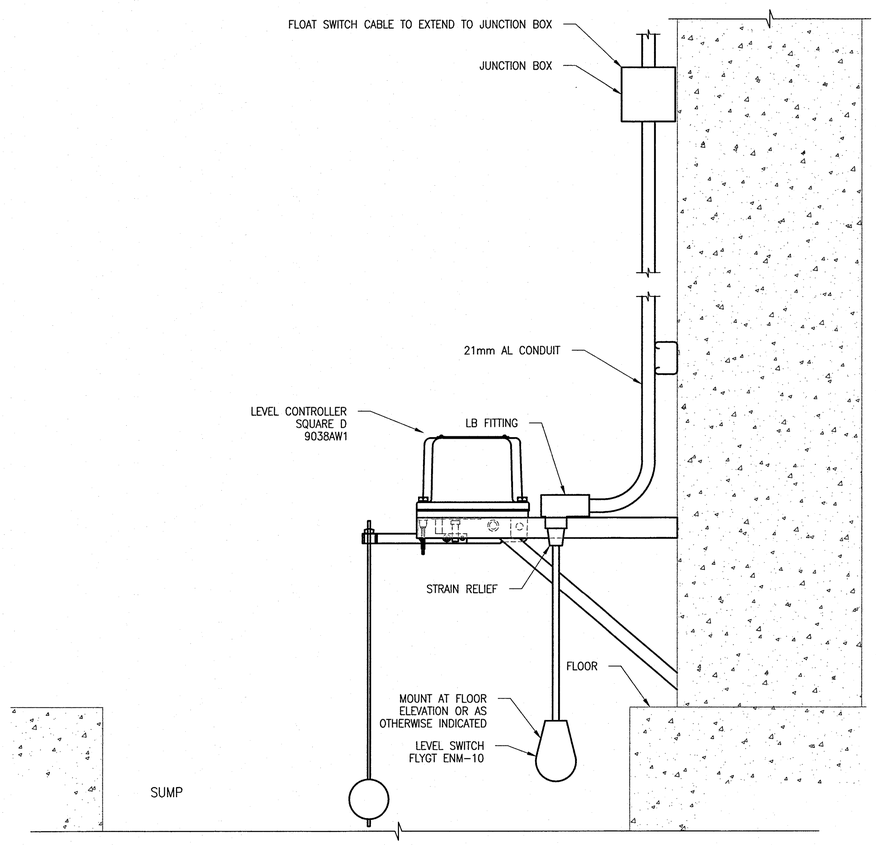


A SUMP LEVEL INSTRUMENTS
NTS

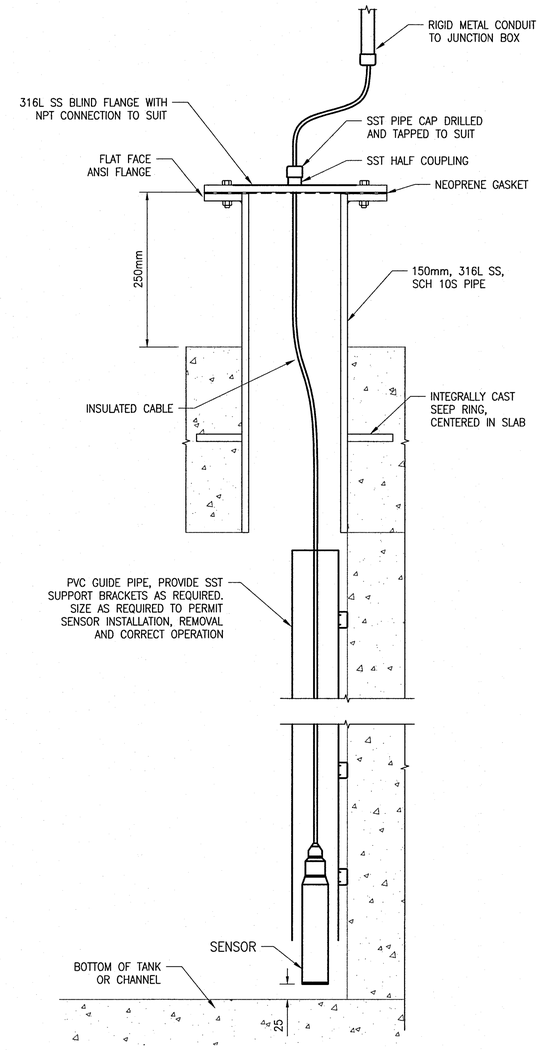


B SUBMERSIBLE LEVEL INSTRUMENTS
NTS

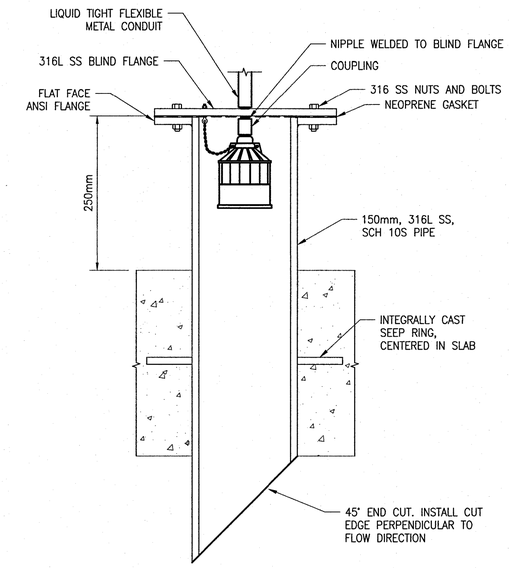


C ULTRASONIC LEVEL SENSOR – FLANGE MOUNT
NTS

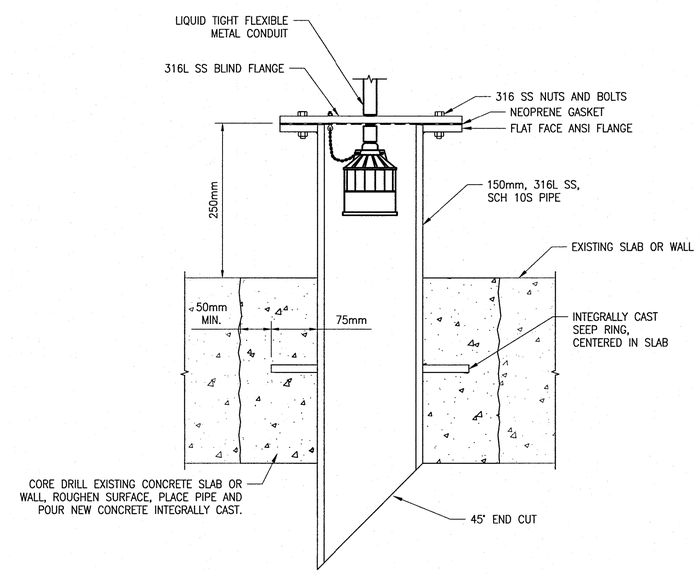


D ULTRASONIC LEVEL SENSOR – FLANGE MOUNT EXISTING CONCRETE
NTS

| REFERENCE DRAWINGS | DESCRIPTION |
|---|---|
| | |

NOTES
1.

APEGM Certificate of Authorization
SNC-Lavalin Inc.
No. 4489

| NO. | REVISIONS | DATE | DESIGN | CHECK |
|---|---|---|---|---|
| 02 | ISSUED FOR CONSTRUCTION – 976-2015 | 2017/04/05 | SSB | TMC |
| 01 | ISSUED FOR CONSTR – B.O. 899-2015 | 04/2016 | SSB | TMC |
| 00 | ISSUED FOR TENDER – B.O. 899-2015 | 2016/01/29 | TMC | DHY |

CH2MHILL. SNC·LAVALIN KGS GROUP

| | |
|---|---|
| DESIGNED BY: S. BOGHOSIAN | CHECKED BY: T. CHURCH |
| DRAWN BY: MJ. PERSSON | APPROVED BY: T. CHURCH |
| SCALE: NTS | ISSUED FOR CONSTRUCTION BY: J. SHUMKA |
| DATE: 2015/10/09 | DATE: 2017/04/05 |
| CONSULTANT NO.: 474248 | |

ENGINEER'S SEAL
PROVINCE OF MANITOBA
TOM CHURCH
Member 32682
REGISTERED PROFESSIONAL ENGINEER
Apr. 3, 2017

Winnipeg
THE CITY OF WINNIPEG
WATER AND WASTE DEPARTMENT

SOUTH END WATER POLLUTION CONTROL CENTRE
SEWPCC UPGRADING/EXPANSION PROJECT
AUTOMATION
INSTALLATION DETAILS
LEVEL INSTRUMENTS

| CITY DRAWING NUMBER | SHEET | REV. | SIZE |
|---|---|---|---|
| 1-0102-ADTL-A005 | 001 | 02 | A1 |

LAST SAVE: 2017/04/03 – 8:46am
PATH: C:\pw_workdir\ch2mhill_wbg\ve006717\d0355981\1-0102-ADTL-A005.dwg

PLOT DATE: Apr 03, 2017 – 8:46am
FILE NAME: 1-0102-ADTL-A005.dwg