A1 SIZE – 594mm x 841mm

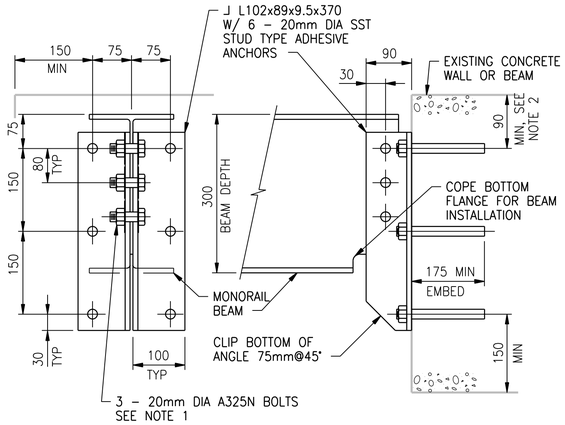

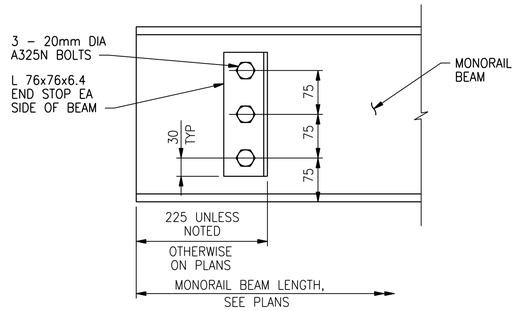

MONORAIL STOP

NOTES:

1. WHERE BOTH ENDS OF BEAM ARE ATTACHED TO A WALL, PROVIDE LONG HORIZONTALLY SLOTTED HOLES IN BEAM WEB AT ONE END. TIGHTEN NUTS SNUG TIGHT, BACK OFF 1/2 TURN, AND LOCK WITH DOUBLE NUT.

MONORAIL DETAILS

NTS

0512-101

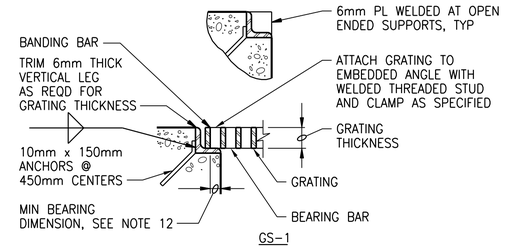

GS-1

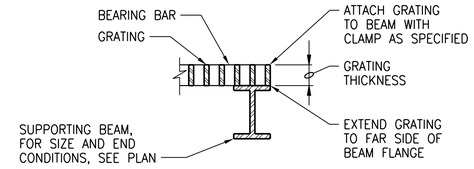

GS-2 – ONE SIDED

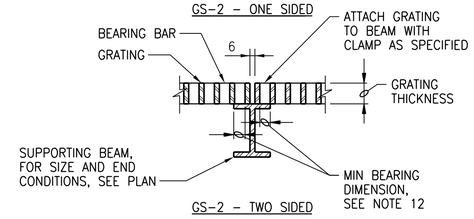

GS-2 – TWO SIDED

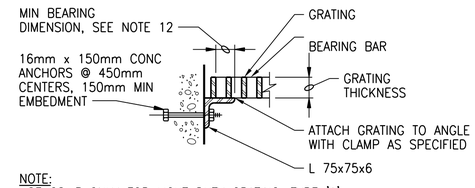

NOTE:
USE GS-3 ONLY FOR LIGHT DUTY GRATING, TYPE 'A'.

GS-3

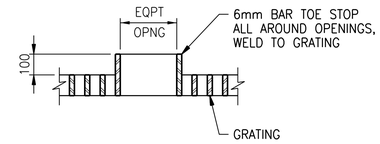

EQUIPMENT OPENINGS

GENERAL NOTES:

1. GRATING SHALL BE LIGHT DUTY GRATING UNLESS OTHERWISE NOTED ON DRAWINGS.
2. GRATING SPAN ⟷ SEE PLAN.
3. INDIVIDUAL GRATING SECTIONS SHALL NOT EXCEED 900mm IN WIDTH OR WEIGH MORE THAN 40 kg, UNLESS INDICATED OTHERWISE, FOR TYPES 'A' & 'B' GRATING. TYPE 'C' GRATING SHALL HAVE A MINIMUM WIDTH OF 600mm REGARDLESS OF WEIGHT.
4. SHOP DRAWINGS BASED ON FIELD DIMENSIONS SHALL BE SUBMITTED TO THE ENGINEER PRIOR TO FABRICATION.
5. MATERIAL FOR SUPPORTS OF STEEL AND ALUMINUM GRATING TO BE SAME AS GRATING, EXCEPT METAL SUPPORTS THAT ARE TO BE EMBEDDED IN CONCRETE SHALL BE TYPE 316 STAINLESS STEEL.
6. UNLESS NOTED OTHERWISE ON PLANS, GRATING THICKNESS SHALL BE AS TABULATED IN "GRATING THICKNESS TABLE" FOR APPLICABLE GRATING TYPE.
7. FOR SERRATED BEARING BARS, INCREASE GRATING THICKNESSES SHOWN IN TABLES BY 6mm.
8. BEARING BAR THICKNESS FOR GRATING TO BE 5mm MINIMUM. SEE SPECIFICATIONS FOR SPACING OF BEARING AND CROSS BARS.
9. BAND ALL EDGES. MATCH DEPTH OF BEARING BAR.
10. TYPE OF MATERIAL USED SHALL BE AS SHOWN ON PLANS OR AS SPECIFIED. THIS STANDARD DETAIL INCLUDES 2 TYPES, ALTHOUGH BOTH MAY NOT BE INCLUDED IN PROJECT.
11. THE HORIZONTAL CLEARANCE BETWEEN THE GRATING AND GRATING SUPPORTS SHALL NOT BE LESS THAN 6mm NOR GREATER THAN 13mm AND AS SPECIFIED.
12. FOR TYPE A & B MIN BEARING HORIZONTAL DIMENSION = 25mm FOR GRATING DEPTH 57mm OR LESS, MIN BEARING HORIZONTAL = 50mm FOR GRATING DEPTH GREATER THAN 57mm.

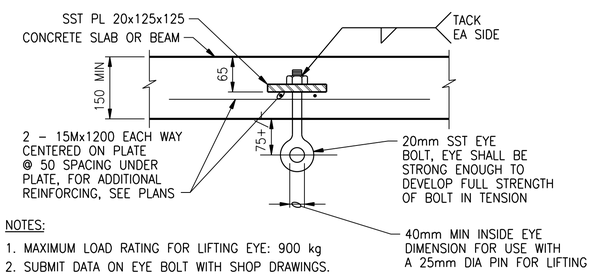

NOTES:

1. MAXIMUM LOAD RATING FOR LIFTING EYE: 900 kg
2. SUBMIT DATA ON EYE BOLT WITH SHOP DRAWINGS.

LIFTING EYE

NTS

0512-121

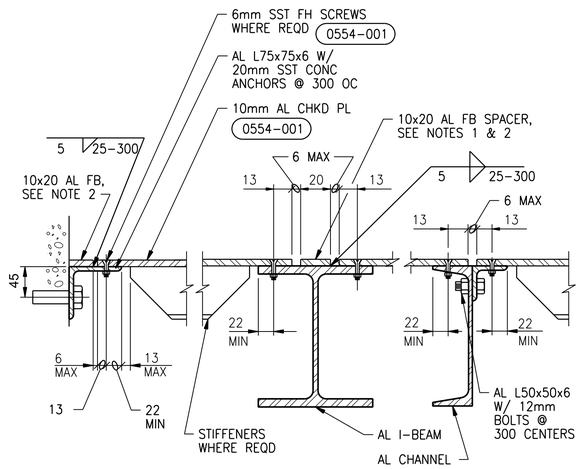

NOTES:

1. PROVIDE AL FB 10mm AT CL SUPPORT WHERE FLANGE WIDTH (OR FLANGE PLUS ANGLE) EXCEEDS 100mm..
2. TYPE "B" COVER SHOWN. DETAIL SIMILAR FOR TYPE "A" COVER. PROVIDE 13mm THICK FLAT BAR SPACERS FOR TYPE "C" COVER.

FLOOR PLATE SUPPORT FRAMING

NTS

0554-002

LIGHT DUTY GRATING
TYPE 'A'
(4.8 kPa)

MINIMUM GRATING THICKNESS TABLE

MAXIMUM SPAN	STEEL	ALUMINUM
1050	25	32
1200	25	38
1350	25	44
1500	32	44
1650	32	51
1800	38	57
1950	38	57
2100	44	64
UP TO 2500	51	64

02

MEDIUM DUTY GRATING
TYPE 'B'
(24 kPa)

MINIMUM GRATING THICKNESS TABLE

MAXIMUM SPAN	STEEL	ALUMINUM
< 600	25	25
750	25	32
900	32	38
1050	32	44
1200	38	51
1350	44	57
1500	44	64
1650	51	DO NOT USE ALUMINUM GRATING
1800	57	
1950	64	

HEAVY DUTY GRATING
TYPE 'C'
(H 20 WHEEL LOAD)

MINIMUM GRATING THICKNESS TABLE

MAXIMUM SPAN	STEEL	ALUMINUM
300	51x4.8	DO NOT USE ALUMINUM GRATING
500	64x6.4	
600	64x9.5 OR 76x6.4	
750	76x9.5 OR 102x6.4	
1000	89x9.5	
1200	102x9.5	
1500	114x9.5	

STANDARD GRATING

NTS

0553-001

©CH2M HILL 2017. ALL RIGHTS RESERVED.

APEGM
Certificate of Authorization
CH2M HILL Canada Ltd.
No. 1441

NO.	REVISIONS	DATE	DESIGN	CHECK
04	ISSUED FOR CONSTRUCTION – 976-2016	2017/04/05	G.O.	J.C.
03	ISSUED FOR CONSTR – B.O. 899-2015	04/2016	G.O.	J.C.
02	ISSUED FOR TENDER – B.O. 899-2015	01/2016	G.O.	J.C.
01	ISSUED FOR CONSTRUCTION	10/2015	G.O.	J.C.
00	ISSUED FOR TENDER	08/2015	G.O.	J.C.

CH2MHILL. SNC·LAVALIN KGS GROUP

DESIGNED BY: J. THANNICKAL
CHECKED BY: E. LUI
DRAWN BY: G.OMORI
APPROVED BY: H.T. FREIHAMMER
SCALE: NTS
ISSUED FOR CONSTRUCTION BY: J. SHUMKA
DATE: 2017/04/05
DATE: 2017/04/05
CONSULTANT NO.: 474248

ENGINEER'S SEAL
APR 5, 2017
PROVINCE OF MANITOBA
E.T. LUI
Member
37003
REGISTERED PROFESSIONAL ENGINEER

THE CITY OF WINNIPEG
WATER AND WASTE DEPARTMENT

SOUTH END WATER POLLUTION CONTROL CENTRE
SEWPCC UPGRADING/EXPANSION PROJECT
STRUCTURAL
STANDARD DETAILS (9)

CITY DRAWING NUMBER: 1-0102-SDTL-A010
SHEET
REV. 04
SIZE A1

PLOT DATE: 2017\03\29
FILE NAME: 1-0102-SDTL-A010.dgn