A1 SIZE – 594mm x 841mm

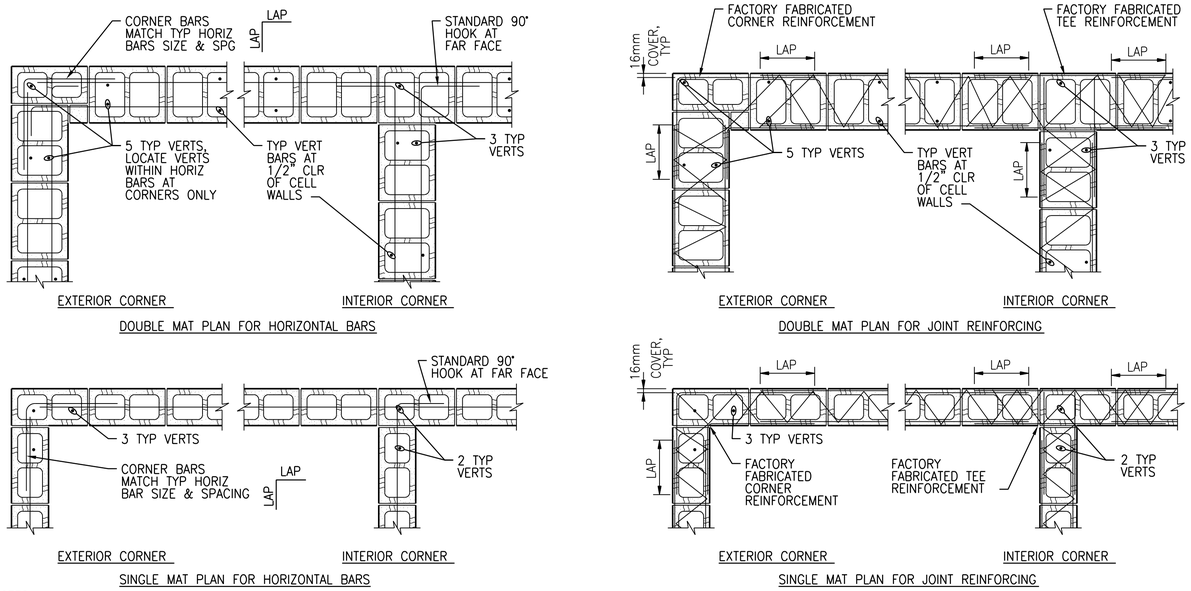

NOTES:

1. LAP = 400mm MINIMUM FOR JOINT REINFORCING UNLESS NOTED OTHERWISE.
2. LAP=48 BAR DIAMETERS, BUT NOT LESS THAN 600mm FOR HORIZONTAL BARS UNLESS NOTED OTHERWISE.

REINFORCED MASONRY WALL CORNERS(SINGLE & DOUBLE MAT)

NTS

0422-001

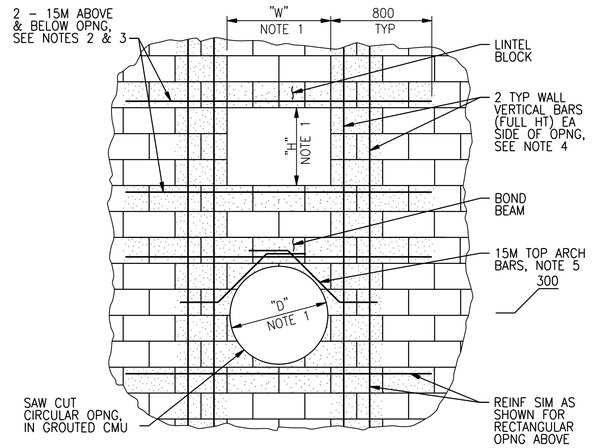

NOTES:

1. TYPICAL FOR ALL OPENINGS WITH (W, H, OR D) 600mm OR GREATER AND 1200mm OR LESS, UNLESS NOTED OTHERWISE. SEE PLANS FOR LARGER OPENINGS.
2. AT ADJACENT OPENINGS WITH LESS THAN 2400mm WALL BETWEEN, CONTINUE HORIZONTAL REINFORCING TO 800mm BEYOND FURTHEST OPENING.
3. AT OPENINGS LOCATED WITHIN 800mm OF CORNER, CONTINUE HORIZONTAL REINFORCING AROUND CORNER PER DETAIL 0422-001
4. LOCATE VERTICAL BARS CENTERED IN 2 ADJACENT CELLS IN 200mm WALLS, AND EACH FACE IN SINGLE GROUT CELL IN 300mm WALLS. LAP 48 BAR DIAMETERS WITH MATCHING FOUNDATION DOWELS.
5. LOCATE 15M ARCH BARS CENTERED IN 200mm WALLS, AND EACH FACE IN 300mm WALLS.

CMU OPENING REINFORCING

NTS

0422-002

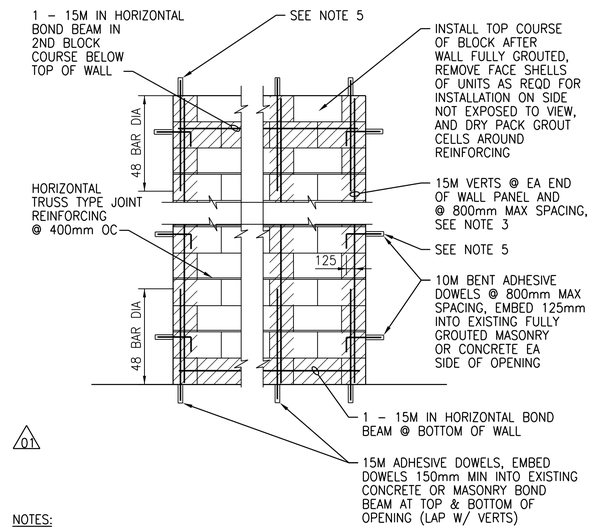

NOTES:

1. BLOCK INFILL TO MATCH EXISTING ADJACENT BLOCK SIZE, COLOR, TEXTURE, JOINT, STACKED OR RUNNING BOND.
2. FOR WALL PANELS WITH OPENINGS TO BE FILLED THAT ARE IN EXCESS OF 30% OF WALL AREA, REPLACE WALL PANEL COMPLETE.
3. LAP VERTICAL BARS 48 BAR DIAMETERS WITH TOP AND BOTTOM DOWELS AS SHOWN. ALL INTERMEDIATE LAPS SHALL BE 72 BAR DIAMETERS.
4. USE OPEN-ENDED CMU UNITS AS REQUIRED TO CONSTRUCT WALL.
5. CONTRACTOR'S OPTION TO USE DOWEL BAR SPLICERS IN PLACE OF DRILL-IN DWLS WHERE LOCATED BESIDE COLS AND UNDER BEAMS, TYP

CMU WALL OPENING INFILL

NTS

0422-101

CMU OPENING REINF SCHEDULE						
200mm WALLS						
W	LINTEL DEPTH	STIRRUP SIZE, SPG	"A" BARS	"B" BARS	"C" BARS	JAMB WIDTH
≤800	200mm	-	1	1	1	200mm
>800≤1200	400mm	-	2	1	1	200mm
>1200≤1800	600mm	10M@200	2	1	2	400mm
>1800≤2400	800mm	10M@400	2	2	3	600mm
>2400≤3000	1200mm	10M@600	2	2	3	600mm
300mm WALLS						
W	LINTEL DEPTH	STIRRUP SIZE, SPG	"A" BARS	"B" BARS	"C" BARS	JAMB WIDTH
≤800	200mm	-	2	2	2	200mm
>800≤1200	400mm	-	2	2	2	200mm
>1200≤1800	600mm	10M@200	2	2	4	400mm
>1800≤2400	800mm	10M@400	2	2	6	600mm
>2400≤3000	1200mm	10M@600	2	2	6	600mm

NOTES:

1. USE BAR QUANTITIES AND SIZES GIVEN IN LINTEL SCHEDULE UNLESS OTHERWISE NOTED ON THE DRAWINGS.
2. EXTEND "C" BARS 48 BAR DIAMETERS OR 600mm MINIMUM BEYOND TOP AND BOTTOM OF OPENING EXCEPT THAT WHEN "H" OR "W" EXCEEDS 600mm, "C" BARS SHALL EXTEND FULL HEIGHT. WHERE THERE IS LESS THAN 2400mm BETWEEN ADJACENT OPENINGS, EXTEND REINFORCING CONTINUOUS TO 800mm BEYOND FURTHEST OPENING.
3. "A" AND "B" BARS SHALL EXTEND 48 BAR DIAMETERS OR 600mm MINIMUM EACH SIDE OF THE OPENINGS.
4. FOR BAR SIZES, MATCH TYPICAL WALL REINFORCING AS SHOWN ON THE BUILDING WALL SECTIONS.

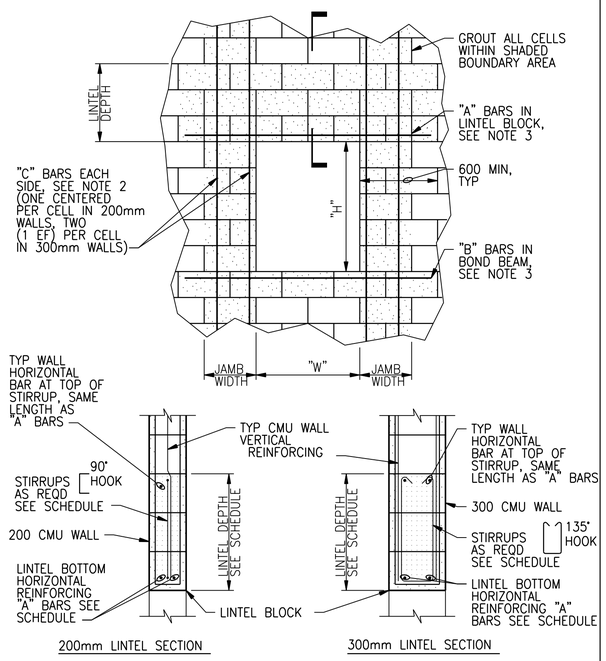

CMU OPENING REINFORCING

NTS

0422-003

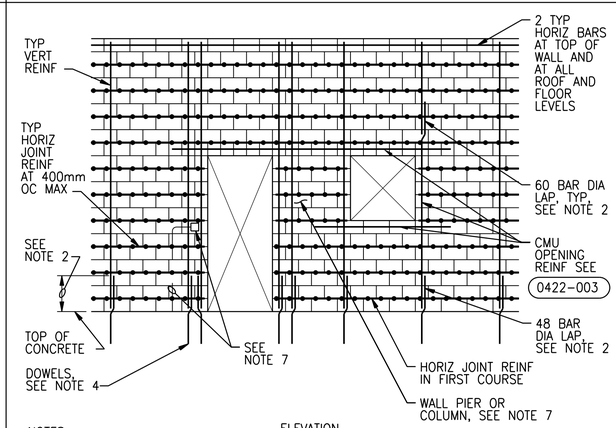

ELEVATION

NOTES:

1. FOR TYPICAL WALL REINFORCING, SEE WALL SECTIONS AND DETAILS FOR EACH FACILITY. FOR MINIMUM REINFORCING REQUIREMENTS, SEE GENERAL STRUCTURAL NOTES.
2. LAP VERTICAL REINFORCING WITH WALL DOWELS 48 BAR DIAMETERS (600mm MIN), LAP ALL OTHER VERTICAL BARS 60 BAR DIAMETERS.
3. HORIZONTAL JOINT REINFORCEMENT SPLICE = 400mm.
4. PROVIDE DOWEL BARS IN FOUNDATION TO MATCH ALL VERTICAL REINFORCING.
5. FOR ADDED REINFORCING AT WALL INTERSECTIONS AND CORNERS, SEE 0422-001.
6. GROUT EACH SIDE OF OPENING AS NOTED IN TYPICAL OPENING REINFORCING DETAIL 0422-003.
7. DO NOT PLACE VERTICAL CONDUIT IN THE SAME CELL AS VERTICAL REINFORCING.

INTERMEDIATE REINFORCED MASONRY SHEAR WALL

NTS

0422-004

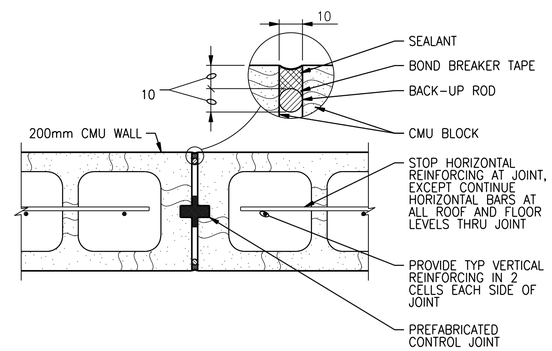

NOTE:

SIMILAR DETAIL FOR 300mm CMU WALL WITH 2 LAYERS OF REINFORCING.

CMU CONTROL JOINT

NTS

0422-031

APEGM
Certificate of Authorization
CH2M HILL Canada Ltd.
No. 1441

NO.	REVISIONS	DATE	DESIGN	CHECK
03	ISSUED FOR CONSTRUCTION – 976-2016	2017/04/05	G.O.	J.C.
02	ISSUED FOR CONSTR – B.O. 899-2015	04/2016	G.O.	J.C.
01	ISSUED FOR ADD. 2 – B.O. 899-2015	02/2016	G.O.	J.C.
00	ISSUED FOR TENDER – B.O. 899-2015	01/2015	G.O.	J.C.

CH2MHILL. SNC·LAVALIN KGS GROUP

DESIGNED BY: J. THANNICKAL	CHECKED BY: E. LUI
DRAWN BY: G.OMORI	APPROVED BY: H.T. FREIHAMMER
SCALE: NTS	ISSUED FOR CONSTRUCTION BY: J. SHUMKA
DATE: 2017/04/05	DATE: 2017/04/05
CONSULTANT NO.: 474248	

ENGINEER'S SEAL
APR 5, 2017
PROVINCE OF MANITOBA
E. LUI
Member 37003
REGISTERED PROFESSIONAL ENGINEER

Winnipeg
THE CITY OF WINNIPEG
WATER AND WASTE DEPARTMENT

SOUTH END WATER POLLUTION CONTROL CENTRE
SEWPCC UPGRADING/EXPANSION PROJECT
STRUCTURAL
STANDARD DETAILS (14)

CITY DRAWING NUMBER	SHEET	REV.	SIZE
1-0102-SDTL-A015		03	A1

©CH2M HILL 2017. ALL RIGHTS RESERVED.