A1 SIZE – 594mm x 841mm

FUSE SCHEDULE			
TB	IDENTIFIER	SIZE	RATING
TB11	F11	6.3x32mm	10A TD
	F12	6.3x32mm	1A FA
TB12 (UPS)	F21	6.3x32mm	10A TD
	F22	6.3x32mm	2.25A TD
	F23	6.3x32mm	1A FA
	F24	6.3x32mm	1A TD
	F25	6.3x32mm	2.5A FA
	F26	6.3x32mm	1A FA
TB17	F71	5x20mm	2.5A TD
	F72	5x20mm	2.5A TD
	F73	5x20mm	2.5A TD
	F74	5x20mm	2.5A TD
	F75	5x20mm	2.5A TD
TB21	F01	6.3x32mm	10A TD
	F02	6.3x32mm	5A TD
	F03	6.3x32mm	10A TD
	F04	6.3x32mm	10A TD
	F05	6.3x32mm	1A TD
	F06	6.3x32mm	1A TD
	F07	6.3x32mm	1A TD
	F08	6.3x32mm	10A TD
	F09	6.3x32mm	10A TD

NOTES
FA = FAST ACTING
TD = TIME DELAY

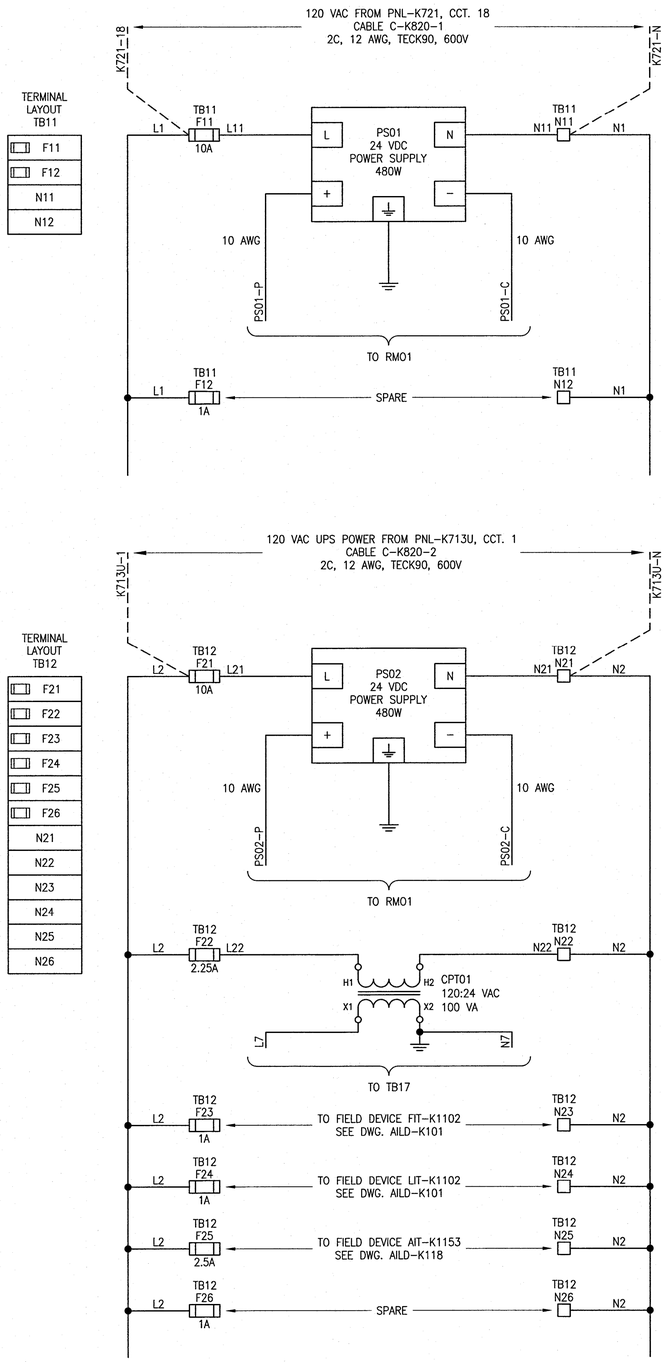

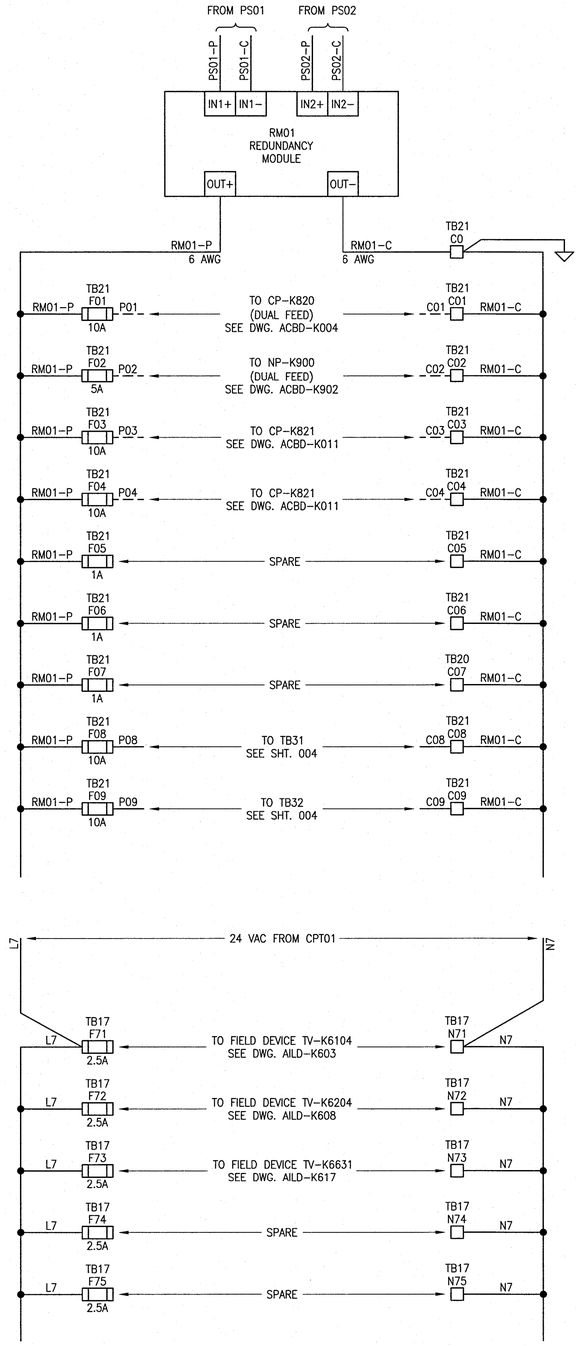

TERMINAL LAYOUT TB21

F01
F02
F03
F04
F05
F06
F07
F08
F09
C0
C01
C02
C03
C04
C05
C06
C07
C08
C09

TERMINAL LAYOUT TB17

F71
N71
F72
N72
F73
N73
F74
N74
F75
N75

RM01 POWER CONSUMPTION SCHEDULE AT 24 VDC		
LOAD	CURRENT (mA)	NOTES
CP-K820	4584	2
NP-K900	1260	2
CP-K821	6122	–
LIT-K1132	834	1
LIT-K1511	834	1
LIT-K2501	834	1
FIT-K2542	380	1
TOTAL	14848	

NOTES
1. BASED ON DATA SHEET.
2. DUAL FEED, LOADS INCLUDED.

UPS POWER CONSUMPTION SCHEDULE AT 120 VAC		
LOAD	CURRENT (mA)	NOTES
PS02	5100	1
CPT01	850	1
FIT-K1102	292	1
LIT-K1102	300	1
AIT-K1153	834	1
TOTAL	7376	

NOTES
1. BASED ON DATA SHEET.

CPT01 POWER CONSUMPTION SCHEDULE AT 24 VAC		
LOAD	CURRENT (mA)	NOTES
TV-K6104	709	1
TV-K6204	709	1
TV-K6631	709	1
TOTAL	2127	

NOTES
1. BASED ON DATA SHEET.

LEGEND:
ISOLATED GROUND
EQUIPMENT GROUND

REFERENCE DRAWINGS	DESCRIPTION
–	–

APEGM Certificate of Authorization
SNC-Lavalin Inc.
No. 4489

NO.	REVISIONS	DATE	DESIGN	CHECK
00	ISSUED FOR CONSTRUCTION – 976-2016	2017/04/05	MW	PC

CH2MHILL. SNC·LAVALIN KGS GROUP

DESIGNED BY: M. WANG	CHECKED BY: P. CHICATUN
DRAWN BY: M. WANG	APPROVED BY: E. RYCZKOWSKI
SCALE: NTS	ISSUED FOR CONSTRUCTION BY: J. SHUMKA
DATE: 2015/02/05	DATE: 2017/04/05
CONSULTANT NO.: 474248	

ENGINEER'S SEAL
PROVINCE OF MANITOBA
CHICATUN
Member
30307
REGISTERED PROFESSIONAL ENGINEER
APR. 4, 2017
REVISED

Winnipeg
THE CITY OF WINNIPEG
WATER AND WASTE DEPARTMENT

SOUTH END WATER POLLUTION CONTROL CENTRE
SEWPCC UPGRADING/EXPANSION PROJECT
AUTOMATION – POWER DISTRIBUTION SCHEMATIC
HIGH RATE CLARIFICATION BUILDING
PSP-K820 POWER SUPPLY CABINET

CITY DRAWING NUMBER	SHEET	REV.	SIZE
1-0102-ACBD-K002	001	00	A1

LAST SAVE: 2017/04/01 – 10:23am
PATH: C:\pw_workdir\ch2mhill_wbg\sh043284\d0356273\1-0102-ACBD-K002-001.dwg

PLOT DATE: Apr 01, 2017 – 10:23am
FILE NAME:1-0102-ACBD-K002-001.dwg