A1 SIZE – 594mm x 841mm

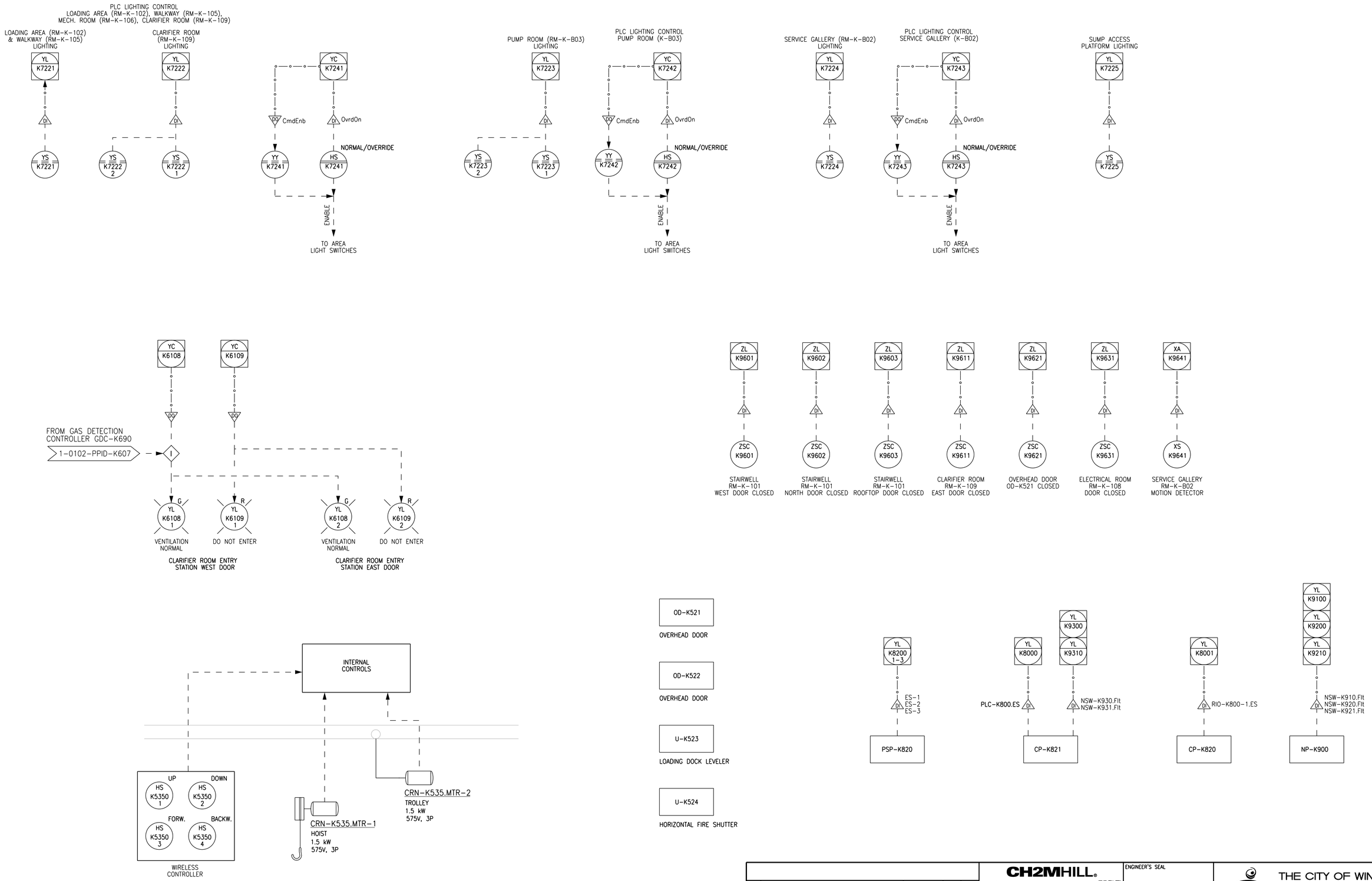

NOTES:

1. DEVICES SHOWN IN AN AUXILLIARY LOCATION ARE LOCATED IN LIGHTING PANEL CP-K724.

APEGM
Certificate of Authorization
CH2M HILL Canada Ltd.
No. 1441

NO.	REVISIONS	DATE	DESIGN	CHECK
00	ISSUED FOR CONSTRUCTION – 976-2016	2017/04/05	E.F.B.	

CH2MHILL
SNC·LAVALIN
KGS GROUP

DESIGNED BY: E. BOHNCKE	CHECKED BY: T. CHURCH
DRAWN BY: E. BOHNCKE	APPROVED BY: H.T. FREIHAMMER
SCALE: NTS	ISSUED FOR CONSTRUCTION BY: J. SHUMKA
DATE: 2017/04/05	DATE: 2017/04/05
CONSULTANT NO.: 474248	

ENGINEER'S SEAL
PROVINCE OF MANITOBA
April 5, 2017
F. J. ABSI
Member
36875
REGISTERED PROFESSIONAL ENGINEER

Winnipeg
THE CITY OF WINNIPEG
WATER AND WASTE DEPARTMENT

SOUTH END WATER POLLUTION CONTROL CENTRE
SEWPCC UPGRADING/EXPANSION PROJECT
PROCESS AND INSTRUMENTATION DIAGRAM
HIGH RATE CLARIFICATION
LIGHTING, SECURITY AND MISCELLANEOUS

CITY DRAWING NUMBER	SHEET	REV.	SIZE
1-0102-PPID-K901	001	00	A1

PLOT DATE: 2017\03\31
FILE NAME: C:\01102-PPID\K901.dgn

©CH2M HILL 2017. ALL RIGHTS RESERVED.