A1 SIZE – 594mm x 841mm

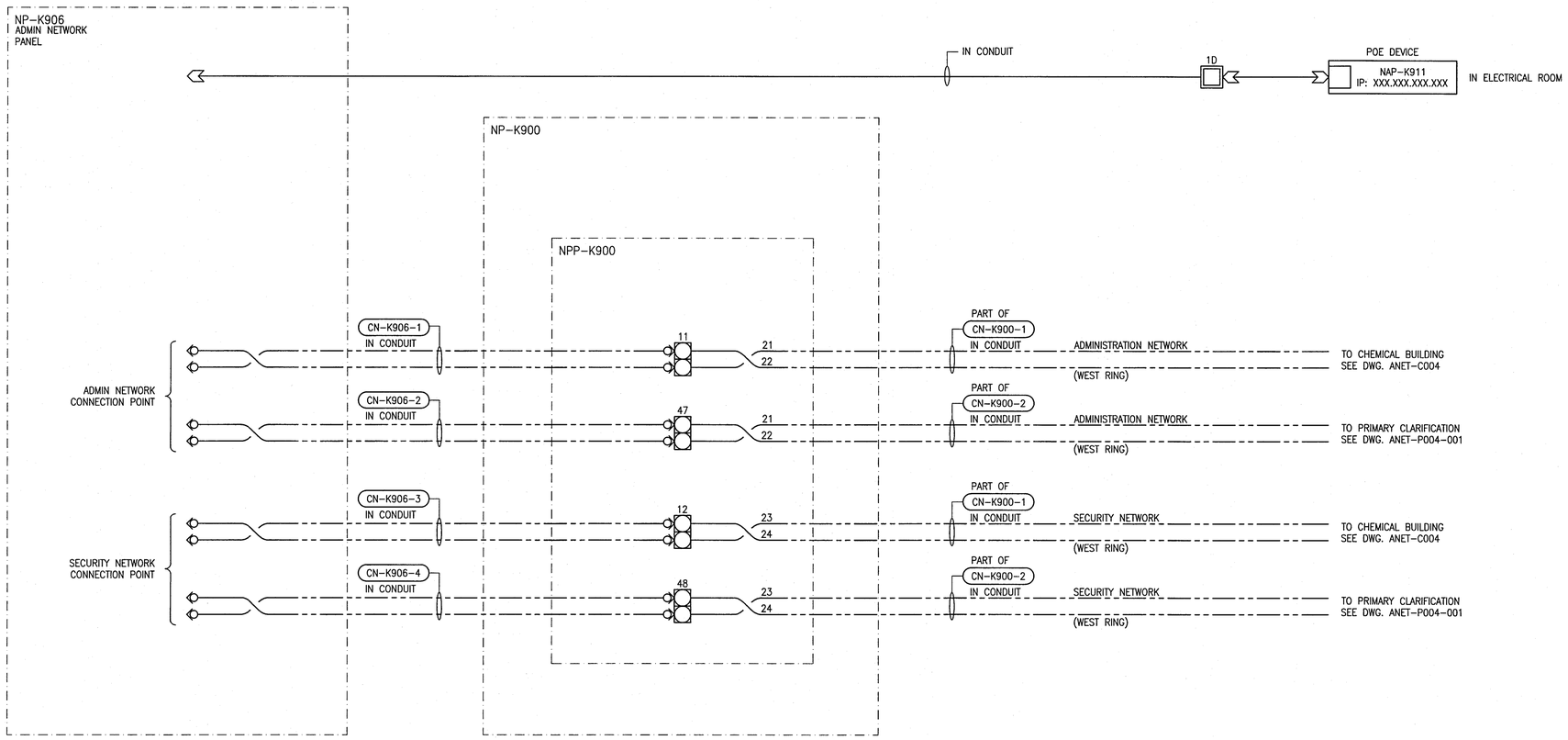

LEGEND:

- FIBRE PORT OR PATCH PANEL
- FIBRE CABLE
- WALL PLATE RJ45 JACK
- CAT6 CABLE, SHIELDED
- LC FIBRE CONNECTOR
- RJ45 CONNECTOR UNSHIELDED

REFERENCE DRAWINGS	DESCRIPTION
1-0102-ANET-A005	NETWORK DIAGRAM, FACILITY FIBRE ALLOCATION
1-0102-ANET-K003	NETWORK DIAGRAM, DEVICE NETWORK
1-0102-ANET-K002	NETWORK DIAGRAM, CONTROL NETWORK
1-0102-ANET-K001	NETWORK DIAGRAM, SUPERVISORY NETWORK
1-0102-ABDG-K001	CONTROL SYSTEM ARCHITECTURE

APEGM
Certificate of Authorization
SNC-Lavalin Inc.
No. 4489

NO.	REVISIONS	DATE	DESIGN	CHECK
00	ISSUED FOR CONSTRUCTION – 976-2016	2017/04/05	PC	TMC

CH2MHILL.
SNC·LAVALIN
KGS GROUP CONSULTING ENGINEERS

DESIGNED BY: P. CHICATUN	CHECKED BY: T. CHURCH
DRAWN BY: M. WANG	APPROVED BY: E. RYCZKOWSKI
SCALE: NTS	ISSUED FOR CONSTRUCTION BY: J. SHUMKA
DATE: 2015/04/02	DATE: 2017/04/05
CONSULTANT NO.: 474248	

ENGINEER'S SEAL
PROVINCE OF MANITOBA
CHICATUN
Member
30307
REGISTERED PROFESSIONAL ENGINEER
APR. 4/ 2017
REV. 00

Winnipeg
THE CITY OF WINNIPEG
WATER AND WASTE DEPARTMENT

SOUTH END WATER POLLUTION CONTROL CENTRE
SEWPCC UPGRADING/EXPANSION PROJECT
AUTOMATION – NETWORK DIAGRAM
HIGH RATE CLARIFICATION BUILDING
ADMINISTRATION AND SECURITY NETWORK

CITY DRAWING NUMBER	SHEET	REV.	SIZE
1-0102-ANET-K004	001	00	A1

LAST SAVE: 2017/04/01 – 2:16pm
PATH: C:\pw_workdir\ch2mhill_wbg\sh043264\d035639\1-0102-ANET-K004.dwg

PLOT DATE: Apr 01, 2017 – 2:16pm

FILE NAME: 1-0102-ANET-K004.dwg