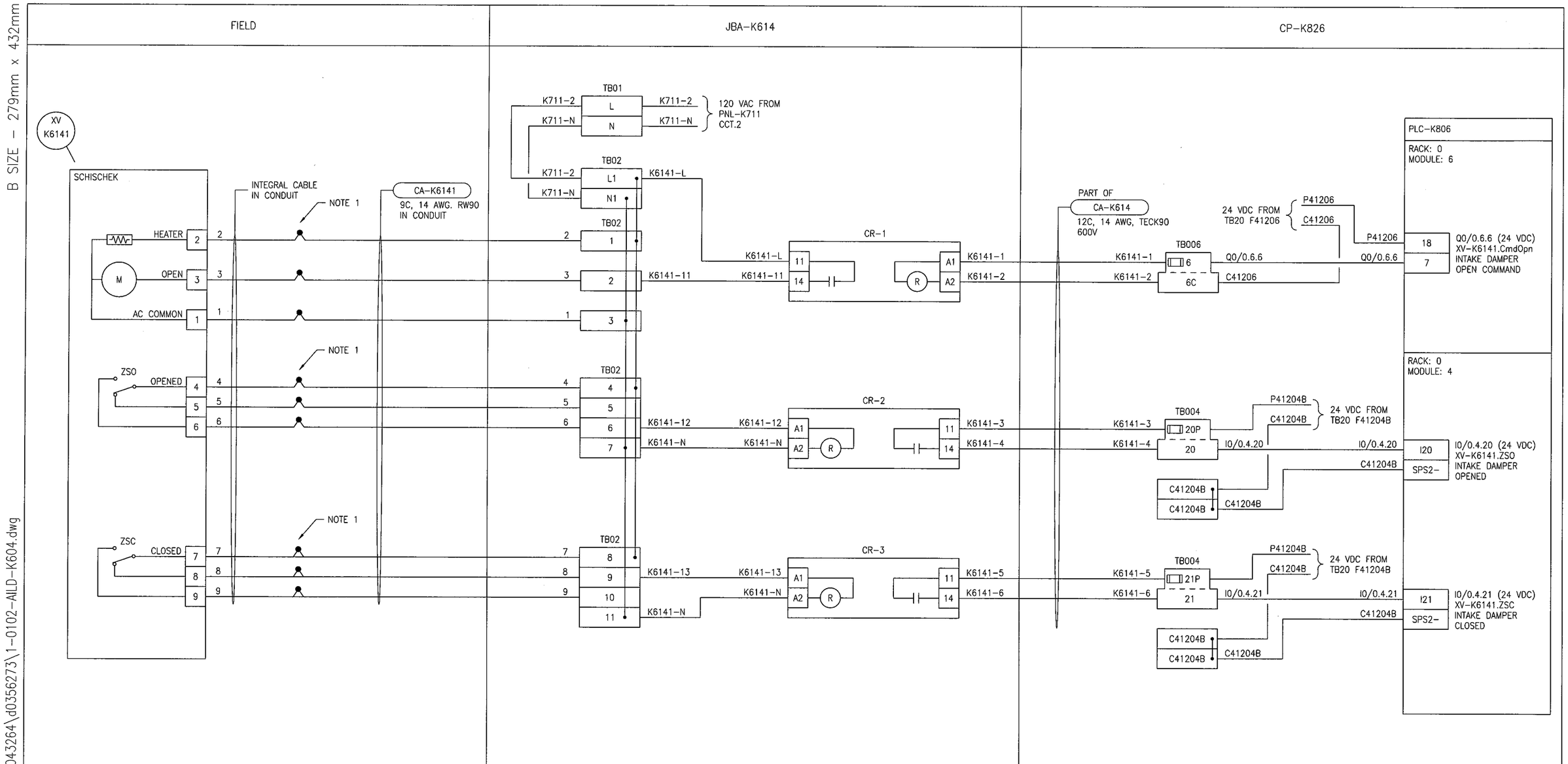


NOTES

1. PROVIDE ADDITIONAL WIRING, CONDUIT AND BOXES AS REQUIRED TO EXTEND THE LEADS TO THE ASSOCIATED JUNCTION BOX.

APEGM Certificate of Authorization
SNC-Lavalin Inc.
No. 4489

| NO. | REVISIONS | DATE | DESIGN | CHECK |
|---|---|---|---|---|
| 00 | ISSUED FOR CONSTRUCTION - 976-2016 | 2017/04/05 | SSB | TMC |

SNC·LAVALIN CH2MHILL KGS GROUP CONSULTING ENGINEERS

| | |
|---|---|
| DESIGNED BY: S. BOGHOSIAN | CHECKED BY: T. CHURCH |
| DRAWN BY: S. BOGHOSIAN | APPROVED BY: E. RYCZKOWSKI |
| SCALE: NTS | DATE: 2015/03/03 |
| ISSUED FOR CONSTRUCTION BY: J. SHUMKA | DATE: 2017/04/05 |
| CONSULTANT NO.: 474248 | |

ENGINEER'S SEAL
PROVINCE OF MANITOBA
TOM CHURCH
Member 32682
REGISTERED PROFESSIONAL ENGINEER
Apr. 5, 2017

Winnipeg
THE CITY OF WINNIPEG
WATER AND WASTE DEPARTMENT

SOUTH END WATER POLLUTION CONTROL CENTRE
SEWPCC UPGRADING/EXPANSION PROJECT
AUTOMATION - LOOP DIAGRAM
XV-K6141
WASTE SLUDGE SUMP SUPPLY DAMPER

| CITY DRAWING NUMBER | SHEET | REV. | SIZE |
|---|---|---|---|
| 1-0102-AILD-K604 | 001 | 00 | B |

B SIZE - 279mm x 432mm

LAST SAVE: 2017/04/01 - 10:44am
PATH: C:\pw_workdir\ch2mhill_wbg\sh04326d\d0356273\1-0102-AILD-K604.dwg

PLOT DATE: Apr 01, 2017 - 10:44am
FILE NAME: 1-0102-AILD-K604.dwg