A1 SIZE - 594mm x 841mm

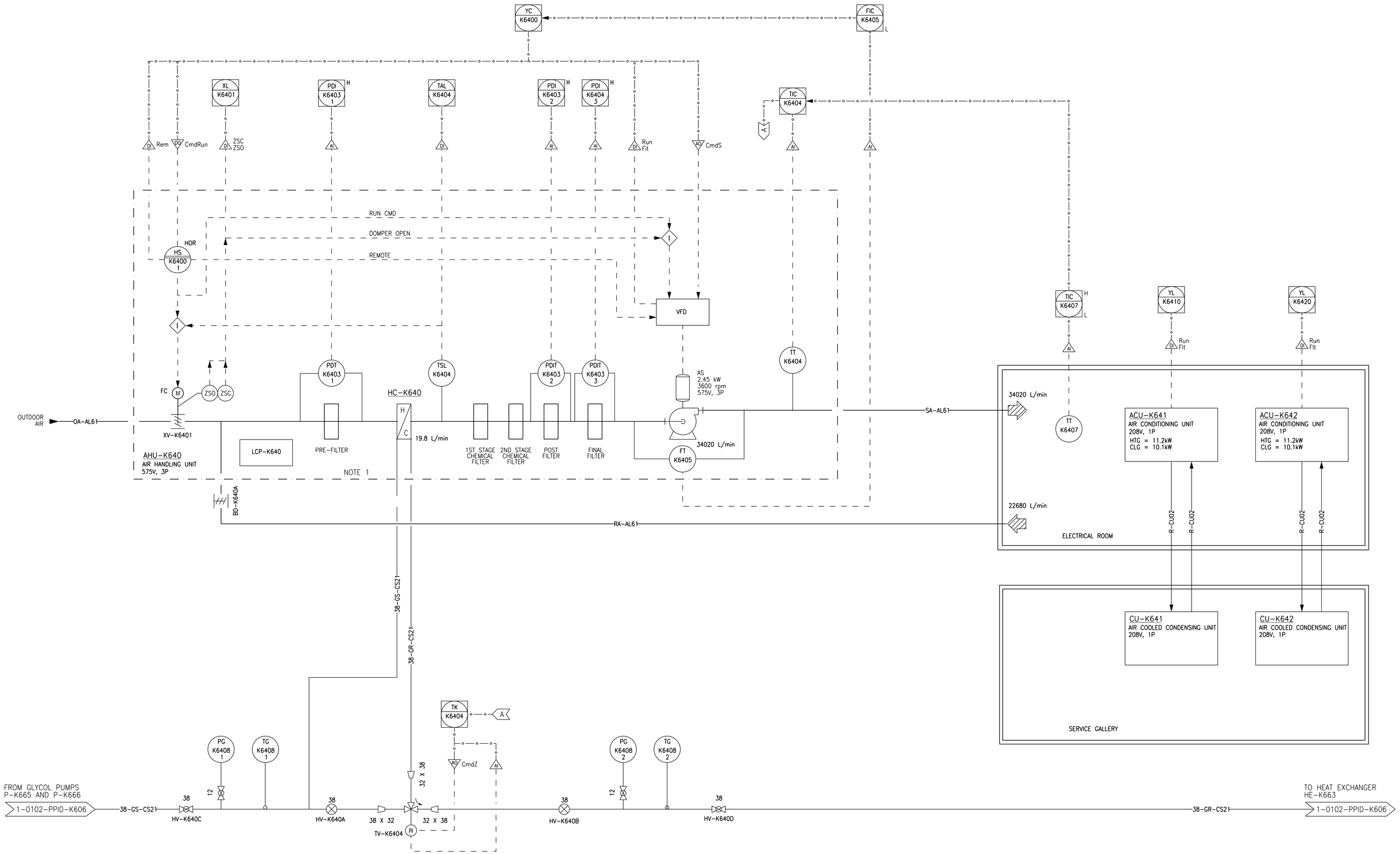

NOTES

1. NOT ALL INTERLOCKS ARE SHOWN.
2. PLEASE REFER TO DETAIL 2380-432 ON DRAWING MDTL-A007 FOR VALVING CONNECTION TO HEATING COIL.

APEGM
Certificate of Authorization
CH2M HILL Canada Ltd.
No. 1441

NO.	REVISIONS	DATE	DESIGN	CHECK
00	ISSUED FOR CONSTRUCTION - 976-2016	2017/04/05	V.E.	

CH2MHILL
SNC·LAVALIN
KGS GROUP

DESIGNED BY: T. TRAN	CHECKED BY: R. NATARAJAN
DRAWN BY: J.CORTEZ	APPROVED BY: H.T. FREIHAMMER
SCALE: NTS	ISSUED FOR CONSTRUCTION BY: J. SHUMKA
DATE: 2017/04/05	DATE: 2017/04/05
CONSULTANT NO.: 474248	

ENGINEER'S SEAL
PROVINCE OF MANITOBA
T.T. TRAN
Member 40578
REGISTERED PROFESSIONAL ENGINEER
April 18/17.

Winnipeg
THE CITY OF WINNIPEG
WATER AND WASTE DEPARTMENT

SOUTH END WATER POLLUTION CONTROL CENTRE
SEWPCC UPGRADING/EXPANSION PROJECT
PROCESS AND INSTRUMENTATION DIAGRAM
HIGH RATE CLARIFICATION
AIR HANDLING UNITS AHU-K640, ACU-K641 & ACU-K642

CITY DRAWING NUMBER	SHEET	REV.	SIZE
1-0102-PPID-K604	001	00	A1

PLOT DATE: 2017\04\05
FILE NAME: 1-0102-PPID-K604.dgn

©CH2M HILL 2017. ALL RIGHTS RESERVED.