A1 SIZE – 594mm x 841mm

BEAM NO. (SEE PLANS)	SIZE		* TOP REINF AT LEFT SUPPORT		BOTTOM REINF		* TOP REINF AT RIGHT SUPPORT		S BARS	SHEAR REINF				REMARKS
	W	D	T	TC	B	BC	T	TC		NO. (NOTE 5)	SIZE	TYPE	SPACING FROM LEFT SUPPORT	
BM1	600	600	–	2–30M	–	2–25M	–	2–30M	–	1	10M	STIRRUP	@ 250	
BM2	600	700	–	2–30M	–	7–25M	7–30M	2–30M	–	2	10M	STIRRUP	@ 250	
BM3	600	700	7–30M	2–30M	–	7–25M	–	2–30M	–	2	10M	STIRRUP	@ 250	
BM4	400	600	–	2–15M	–	3–25M	–	2–15M	–	1	10M	STIRRUP	@ 300	
BM5	300	900	–	–	–	4–20M	–	–	–	1	10M	STIRRUP	@ 300	CONTINUE WALL REINFORCING THROUGH BEAM
BM6	300	600	–	2–25M	–	2–25M	–	2–25M	–	1	10M	STIRRUP	@ 300	
BM7	1050	1000	–	7–25M	–	7–25M	–	7–25M	–	3	10M	STIRRUP	@ 300	
BM8	900	1000	–	6–25M	–	6–25M	–	6–25M	–	3	10M	STIRRUP	@ 300	SHIFT BARS TO AVAOID WS @ EXP JT

NOTES:

1. * TOP REINFORCING MAY BE CALLED–OUT TWICE IN SCHEDULE. (I.E. "TOP REINFORCING AT RIGHT SUPPORT" OF BEAM THAT IS CONTINUOUS OVER THE RIGHT SUPPORT IS CALLED–OUT AS "TOP REINFORCING AT LEFT SUPPORT" OF ADJACENT BEAM.)
2. LEFT SUPPORT IS DESIGNATED AS THE SUPPORT CLOSEST TO THE LEFT SIDE OR BOTTOM OF SHEET ON WHICH FRAMING PLAN IS DRAWN, UNLESS NOTED OTHERWISE ON PLAN.
3. WHERE FLOOR SLOPES, DEPTH OF BEAM (D) SHOWN IS MINIMUM DEPTH. BOTTOM ELEVATION OF BEAM SHALL BE CONSTANT, UNLESS INDICATED OTHERWISE.
4. WHERE SHEAR REINFORCING "TYPE" IS INDICATED AS "STIRRUP", PROVIDE SHEAR REINFORCING AND CLOSURES AS SHOWN IN BEAM REINFORCING DETAIL. WHERE SHEAR REINFORCING "TYPE" IS INDICATED AS "CLOSED TIE", PROVIDE CLOSED TIES IN LIEU OF STIRRUPS AND CLOSURE BARS.
5. "NO." INDICATES NUMBER OF STIRRUPS OR TIES PER SET.

BEAM SCHEDULE

NTS

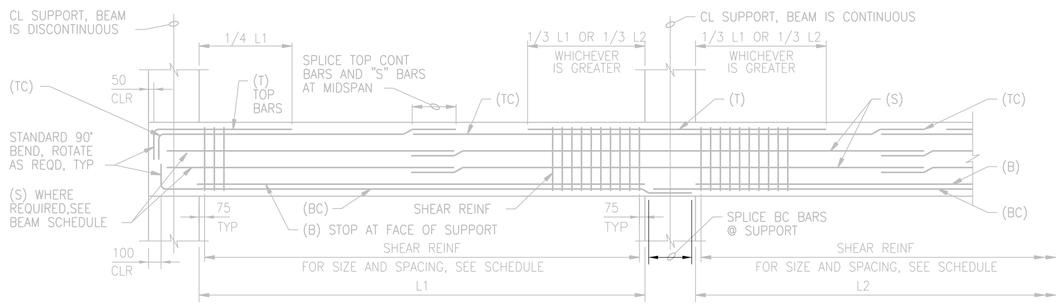

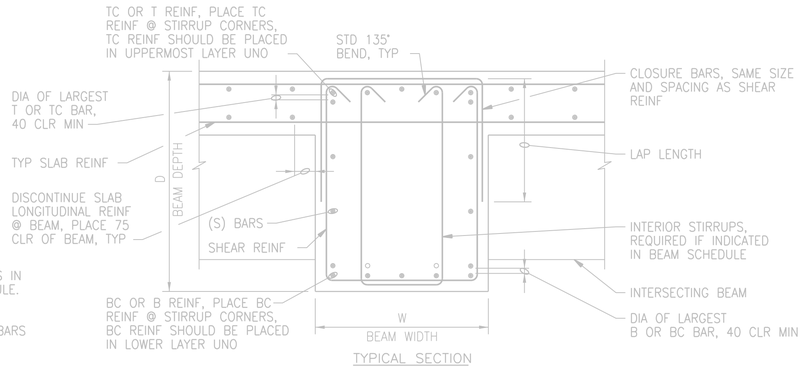

NOTES:

1. PLACE TOP (T & TC) AND BOTTOM (B & BC) BARS IN MULTIPLE ROWS ONLY WHERE INDICATED IN SCHEDULE.
2. WHEN INDICATED IN BEAM SCHEDULE, SUBSTITUTE CLOSED TIES ( ) FOR STIRRUPS AND CLOSURE BARS SHOWN ( ).
3. PROVIDE MINIMUM 1 – 15M CONTINUOUS AT EACH CORNER OF STIRRUPS.

BEAM REINFORCING

NTS

COLUMN REINFORCING	SIZE (mm)		VERTICAL REINFORCING	TRAVERSE REINFORCING		CROSS–SECTION	REMARKS
	W	D	(NUMBER–SIZE)	SIZE	S		
C1	300	300	4–20M	10M	300		TOTAL OF 11
C2	300	300	4–25M	10M	300		TOTAL OF 12
C3	400	400	4–25M	10M	300		TOTAL OF 2

NOTES:

1. "W" = DIMENSION IN EAST/WEST DIRECTION.
2. "D" = DIMENSION IN NORTH/SOUTH DIRECTION.
3. "S" = SPACING, SEE DETAIL BELOW.

COLUMN REINFORCING SCHEDULE

NTS

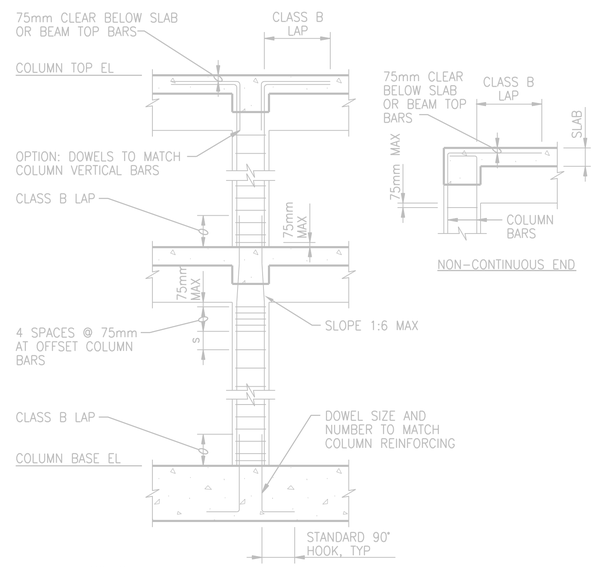

NOTES:

1. FOR COLUMN DIMENSIONS AND REINFORCING SEE COLUMN SCHEDULE.
2. "s" = TIE SPACING.
3. FOR BEAM DIMENSIONS AND REINFORCING SEE BEAM SCHEDULE.

COLUMN REINFORCING

NTS

APEGM
Certificate of Authorization
CH2M HILL Canada Ltd.
No. 1441

NO.	REVISIONS	DATE	DESIGN	CHECK
03	ISSUED FOR CONSTRUCTION – 976–2016	2017/04/05	G.O.	J.C.
02	ISSUED FOR CONSTRUCTION	10/2015	C.R.	J.C.
01	ISSUED FOR ADDENDUM NO. 3	09/2015	C.R.	J.C.
00	ISSUED FOR TENDER	08/2015	G.O.	J.C.

CH2MHILL. KGS GROUP SNC·LAVALIN

DESIGNED BY: E. LUI	CHECKED BY: R. PARIKH
DRAWN BY: G. OMORI	APPROVED BY: H.T. FREIHAMMER
SCALE: NTS	ISSUED FOR CONSTRUCTION BY: J. SHUMKA
DATE: 2017/04/05	DATE: 2017/04/05
CONSULTANT NO.: 474248	

ENGINEER'S SEAL
APR 5, 2017
PROVINCE OF MANITOBA
LUI
Member
37003
REGISTERED PROFESSIONAL ENGINEER

Winnipeg
THE CITY OF WINNIPEG
WATER AND WASTE DEPARTMENT

SOUTH END WATER POLLUTION CONTROL CENTRE
SEWPCC UPGRADING/EXPANSION PROJECT
STRUCTURAL
HIGH RATE CLARIFICATION BUILDING
COLUMN AND BEAM SCHEDULE

CITY DRAWING NUMBER	SHEET	REV.	SIZE
1–0102–SSCH–K001		03	A1

PLOT DATE: 2017\04\02
FILE NAME:

©CH2M HILL 2017. ALL RIGHTS RESERVED.