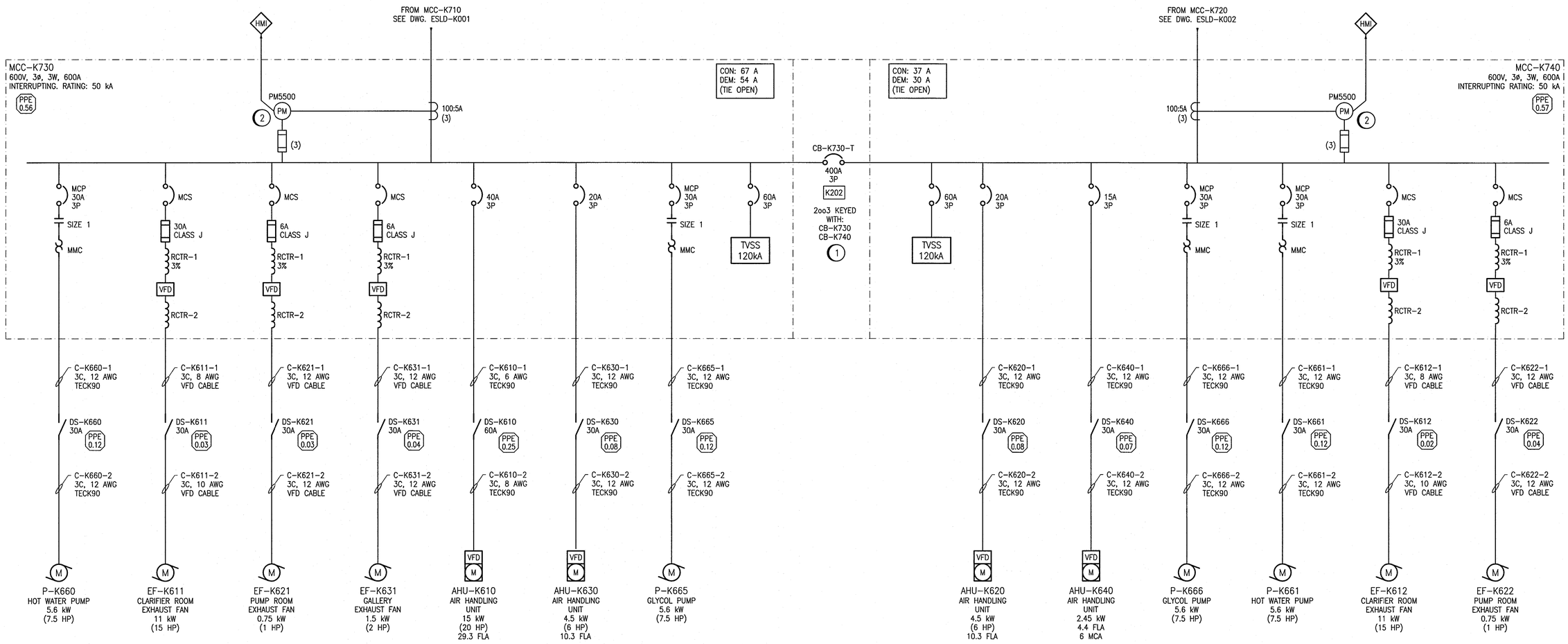

DISCLAIMER NOTES:

1. ARC FLASH VALUES ARE PRELIMINARY AND WILL BE FINALIZED AT A LATER DATE.
2. IMPEDANCE %Z FOR TRANSFORMER ARE ESTIMATED AND WILL BE CORRECTED WITH ACTUAL VALUES SUBMITTED BY THE CONTRACTOR FROM SHOP DRAWING SUBMITTALS.

GENERAL NOTES:

1. REFER TO DRAWING 1-0102-ESLD-K001 FOR GENERAL NOTES.

SPECIFIC NOTES:

(1) PROVIDE KIRK KEY INTERLOCKS BETWEEN CB-K730, CB-K740 AND CB-K730-T TO PREVENT CLOSING OF TIE BREAKER WHEN 2 SEPARATE UTILITY SOURCES ARE FEEDING THE MCC.

(2) PROVIDE POWER FOR POWER METERS FROM PNL-K713U, CCT 4.

REFERENCE DRAWINGS	DESCRIPTION
1-0102-ECBD-K003	ELECTRICAL, MCC-K730 AND MCC-K740 LAYOUT AND SCHEDULE
1-0102-EAAA-A001	ELECTRICAL, LEGEND AND DETAILS

APEGM Certificate of Authorization
SNC-Lavalin Inc.
No. 4489

NO.	REVISIONS	DATE	DESIGN	CHECK
00	ISSUED FOR CONSTRUCTION – 976-2016	2017/04/05	WE	DEB

CH2MHILL. KGS GROUP SNC·LAVALIN

DESIGNED BY: V. ELIMBAN	CHECKED BY: E. RYCZKOWSKI
DRAWN BY: MJ. PERSSON	APPROVED BY: D. BECKER
SCALE: NTS	ISSUED FOR CONSTRUCTION BY: J. SHUMKA
DATE: 2015/02/04	DATE: 2017/04/05
CONSULTANT NO.: 474248	

ENGINEER'S SEAL
PROVINCE OF MANITOBA
D.E. BECKER
Member 23646
REGISTERED PROFESSIONAL ENGINEER
April 5/ 2017

Winnipeg
THE CITY OF WINNIPEG
WATER AND WASTE DEPARTMENT

SOUTH END WATER POLLUTION CONTROL CENTRE
SEWPCC UPGRADING/EXPANSION PROJECT
ELECTRICAL – SINGLE LINE DIAGRAM
HIGH RATE CLARIFICATION BUILDING
MCC-K730 & MCC-K740

CITY DRAWING NUMBER	SHEET	REV.	SIZE
1-0102-ESLD-K003	001	00	A1

A1 SIZE – 594mm x 841mm

LAST SAVE: 2017/03/24 – 9:55am
PATH: C:\DWG\1-0102-ESLD-K003.dwg

PLOT DATE: Mar 24, 2017 – 9:55am
FILE NAME: 1-0102-ESLD-K003.dwg