A1 SIZE – 594mm x 841mm

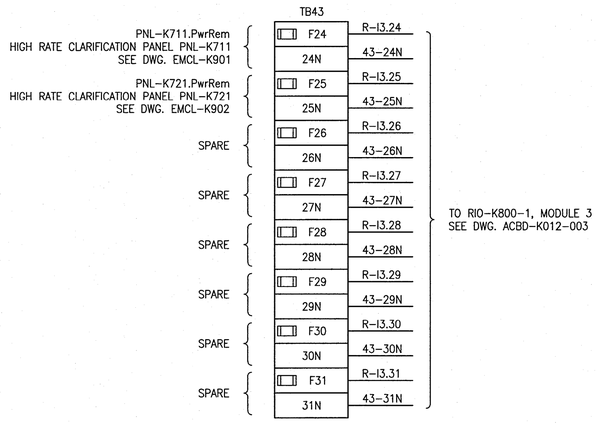

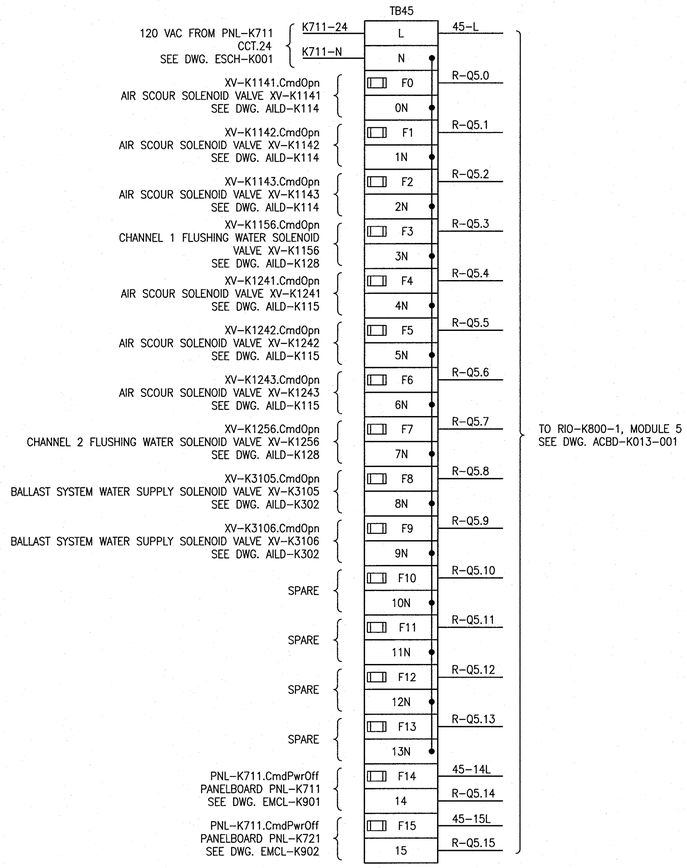

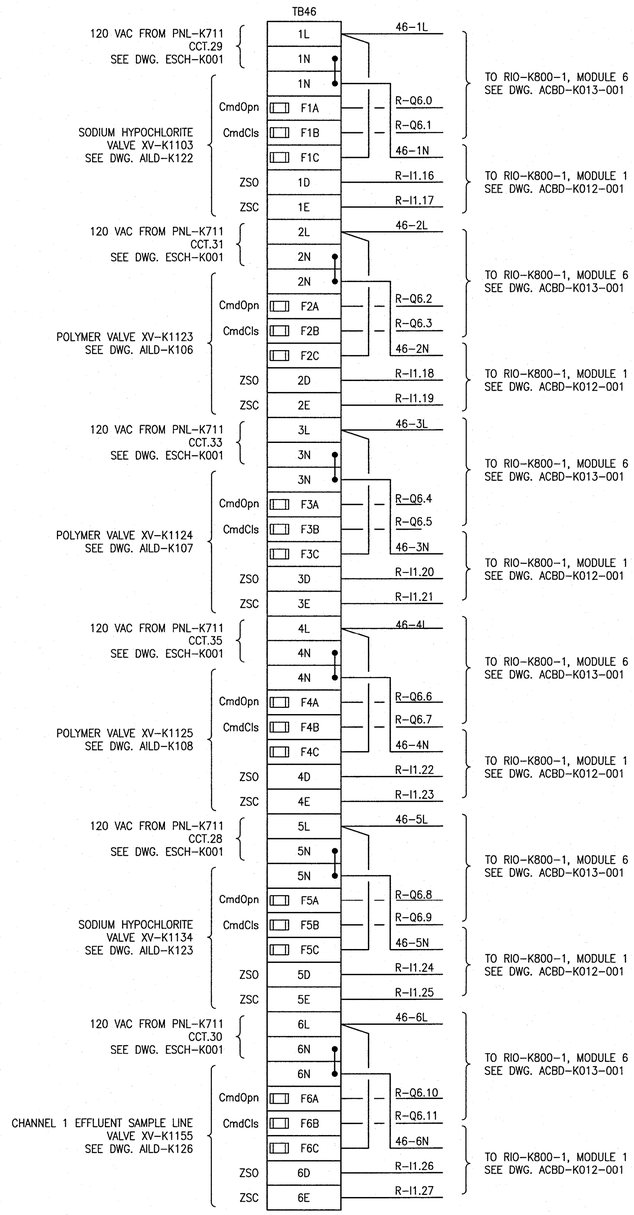

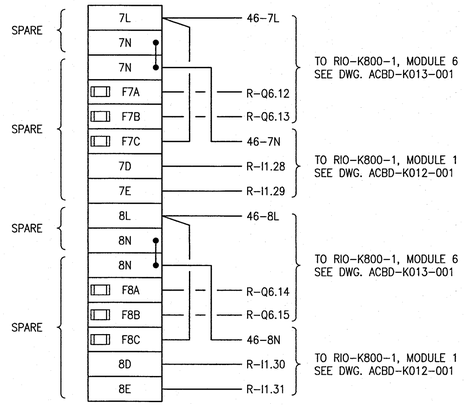

FUSE SCHEDULE

TB	IDENTIFIER	SIZE	RATING
TB43	F24	5x20mm	0.2A FA
	F25	5x20mm	0.2A FA
	F26	5x20mm	0.2A FA
	F27	5x20mm	0.2A FA
	F28	5x20mm	0.2A FA
	F29	5x20mm	0.2A FA
	F30	5x20mm	0.2A FA
	F31	5x20mm	0.2A FA
TB45	F0	5x20mm	2A TD
	F1	5x20mm	2A TD
	F2	5x20mm	2A TD
	F3	5x20mm	2A TD
	F4	5x20mm	2A TD
	F5	5x20mm	2A TD
	F6	5x20mm	2A TD
	F7	5x20mm	2A TD
	F8	5x20mm	2A TD
	F9	5x20mm	2A TD
	F10	5x20mm	2A TD
	F11	5x20mm	2A TD
	F12	5x20mm	2A TD
	F13	5x20mm	2A TD
	F14	5x20mm	1A TD
	F15	5x20mm	1A TD
TB46	F1A	5x20mm	5A TD
	F1B	5x20mm	5A TD
	F1C	5x20mm	0.2A FA
	F2A	5x20mm	5A TD
	F2B	5x20mm	5A TD
	F2C	5x20mm	0.2A FA
	F3A	5x20mm	5A TD
	F3B	5x20mm	5A TD
	F3C	5x20mm	0.2A FA
	F4A	5x20mm	5A TD
	F4B	5x20mm	5A TD
	F4C	5x20mm	0.2A FA
	F5A	5x20mm	5A TD
	F5B	5x20mm	5A TD
	F5C	5x20mm	0.2A FA
	F6A	5x20mm	5A TD
	F6B	5x20mm	5A TD
	F6C	5x20mm	0.2A FA
	F7A	5x20mm	5A TD
	F7B	5x20mm	5A TD
	F7C	5x20mm	0.2A FA
	F8A	5x20mm	5A TD
	F8B	5x20mm	5A TD
	F8C	5x20mm	0.2A FA

NOTES
FA = FAST ACTING
TD = TIME DELAY

REFERENCE DRAWINGS	DESCRIPTION
–	–

APEGM Certificate of Authorization
SNC-Lavalin Inc.
No. 4489

NO.	REVISIONS	DATE	DESIGN	CHECK
00	ISSUED FOR CONSTRUCTION – 976-2016	2017/04/05	MW	PC

CH2MHILL. SNC·LAVALIN KGS GROUP

DESIGNED BY: M. WANG	CHECKED BY: P. CHICATUN
DRAWN BY: M. WANG	APPROVED BY: E. RYCZKOWSKI
SCALE: NTS	ISSUED FOR CONSTRUCTION BY: J. SHUMKA
DATE: 2015/02/12	DATE: 2017/04/05
CONSULTANT NO.: 474248	

ENGINEER'S SEAL
PROVINCE OF MANITOBA
CHICATUN
Member 30307
REGISTERED PROFESSIONAL ENGINEER
APR. 01, 2017
REV. 00

Winnipeg
THE CITY OF WINNIPEG
WATER AND WASTE DEPARTMENT

SOUTH END WATER POLLUTION CONTROL CENTRE
SEWPCC UPGRADING/EXPANSION PROJECT
AUTOMATION – WIRING DIAGRAM
HIGH RATE CLARIFICATION BUILDING
CP-K821, RIO-K800-1 – MISCELLANEOUS WIRING

CITY DRAWING NUMBER	SHEET	REV.	SIZE
1-0102-ACBD-K016	001	00	A1

LAST SAVE: 2017/04/01 – 10:24am
PATH: C:\pw_workdir\ch2mhill_wbg\sh043264\d0356273\1-0102-ACBD-K016-001.dwg

PLOT DATE: Apr 01, 2017 – 10:24am
FILE NAME:1-0102-ACBD-K016-001.dwg