A1 SIZE – 594mm x 841mm

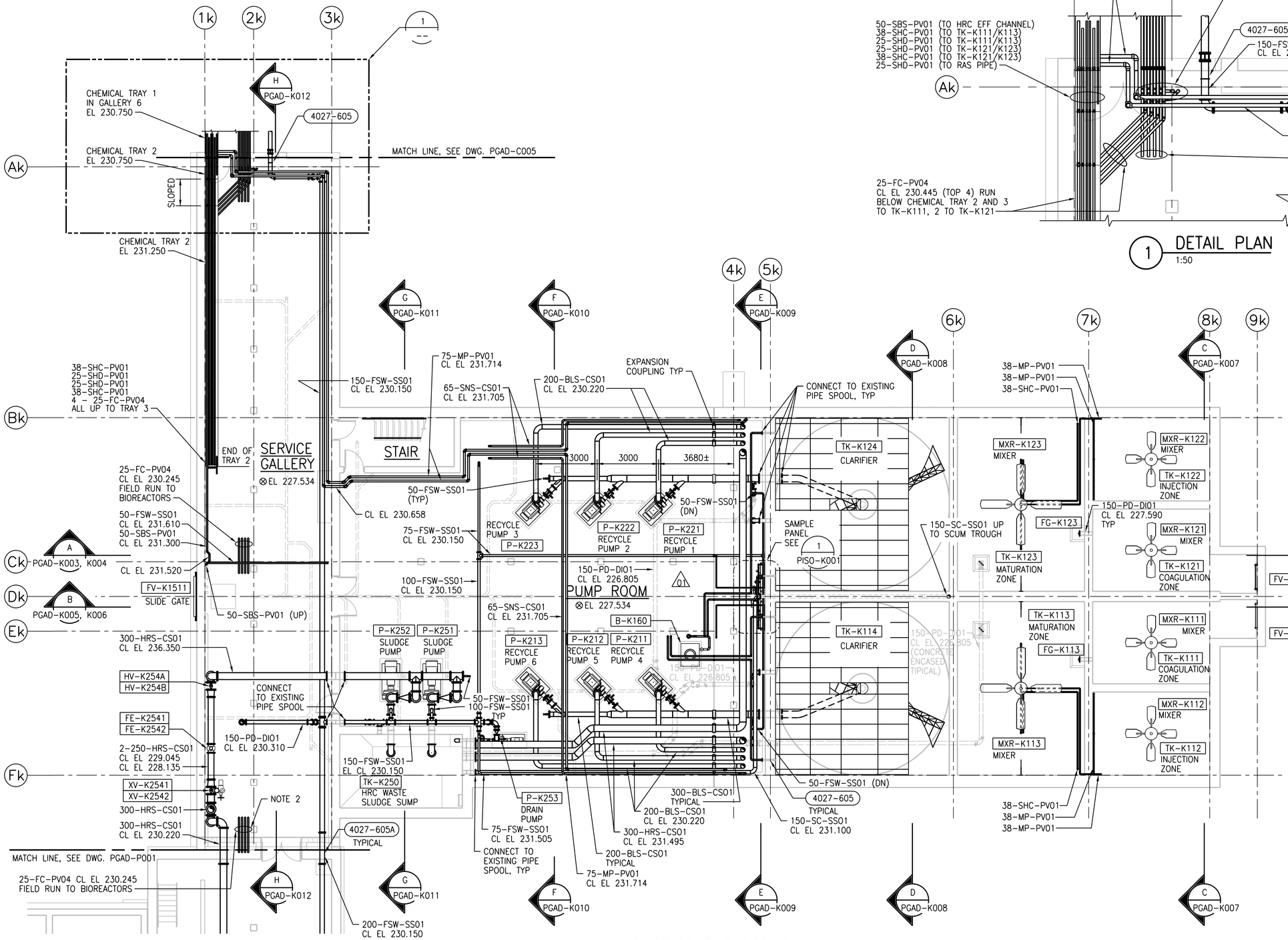

BASEMENT FLOOR PLAN
1:100

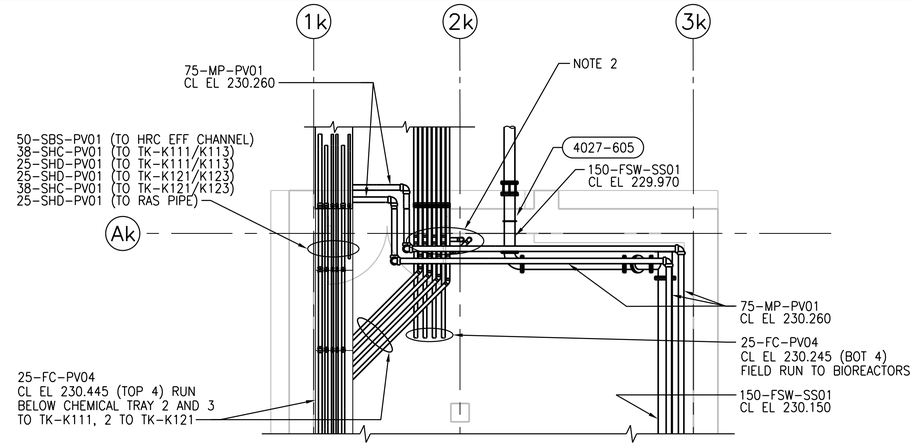

1 DETAIL PLAN
1:50

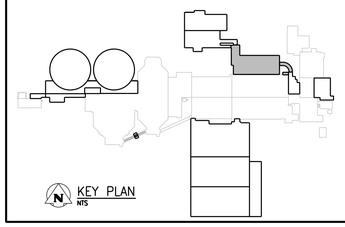

KEY PLAN
NTS

NOTE:
1. REFER TO SHOP DRAWINGS PROVIDED BY VEOLIA WATER TECHNOLOGIES CANADA INC. FOR EQUPMENT CONFIGURATIONS AND INSTALLATION DETAILS.
2. FOR 25-FC-PV04 PROVIDE DROP LEGS OF CLEAR PVC. GANG TOGETHER TOP ROW OF CONTAINMENT PIPING REDUCE TO 12MM CLEAR PVC AND RUN TO NEAREST WALL. REPEAT FOR THE BOTTOM ROW OF PIPES. TERMINATE BOTH WITH A 12MM PVC BALL VALVE 500MM ABOVE THE FLOOR. REFER TO SECTION A ON DWG PGAD-C005 FOR CONCEPT.

APEGM
Certificate of Authorization
CH2M HILL Canada Ltd.
No. 1441

NO.	REVISIONS	DATE	DESIGN	CHECK
03	ISSUED FOR CONSTRUCTION – 976-2016	2017/04/05	B.C.	J.C.
02	ISSUED FOR CONSTRUCTION	10/2015	B.C.	J.C.
01	ISSUED FOR ADDENDUM NO. 3	09/2015	B.C.	J.C.
00	ISSUED FOR TENDER	08/2015	B.C.	J.C.

CH2MHILL. KGS GROUP SNC·LAVALIN

DESIGNED BY: J. KRAEMER
CHECKED BY: F. ABSI
DRAWN BY: B. COOPER
APPROVED BY: H. T. FREIHAMMER
SCALE: 1:100
ISSUED FOR CONSTRUCTION BY: J. SHUMKA
DATE: 2017/04/05
DATE: 2017/04/05
CONSULTANT NO.: 474248

ENGINEER'S SEAL
PROVINCE OF MANITOBA
April 5, 2017
F. J. ABSI
Member 36075
REGISTERED PROFESSIONAL ENGINEER
F. J. Absi

Winnipeg
THE CITY OF WINNIPEG
WATER AND WASTE DEPARTMENT

SOUTH END WATER POLLUTION CONTROL CENTRE
SEWPCC UPGRADING/EXPANSION PROJECT
PROCESS
HIGH RATE CLARIFICATION BUILDING
BASEMENT PLAN

CITY DRAWING NUMBER: 1-0102-PGAD-K001
SHEET:
REV.: 03
SIZE: A1

PLOT DATE: 2017\03\31
FILE NAME:

©CH2M HILL 2017. ALL RIGHTS RESERVED.