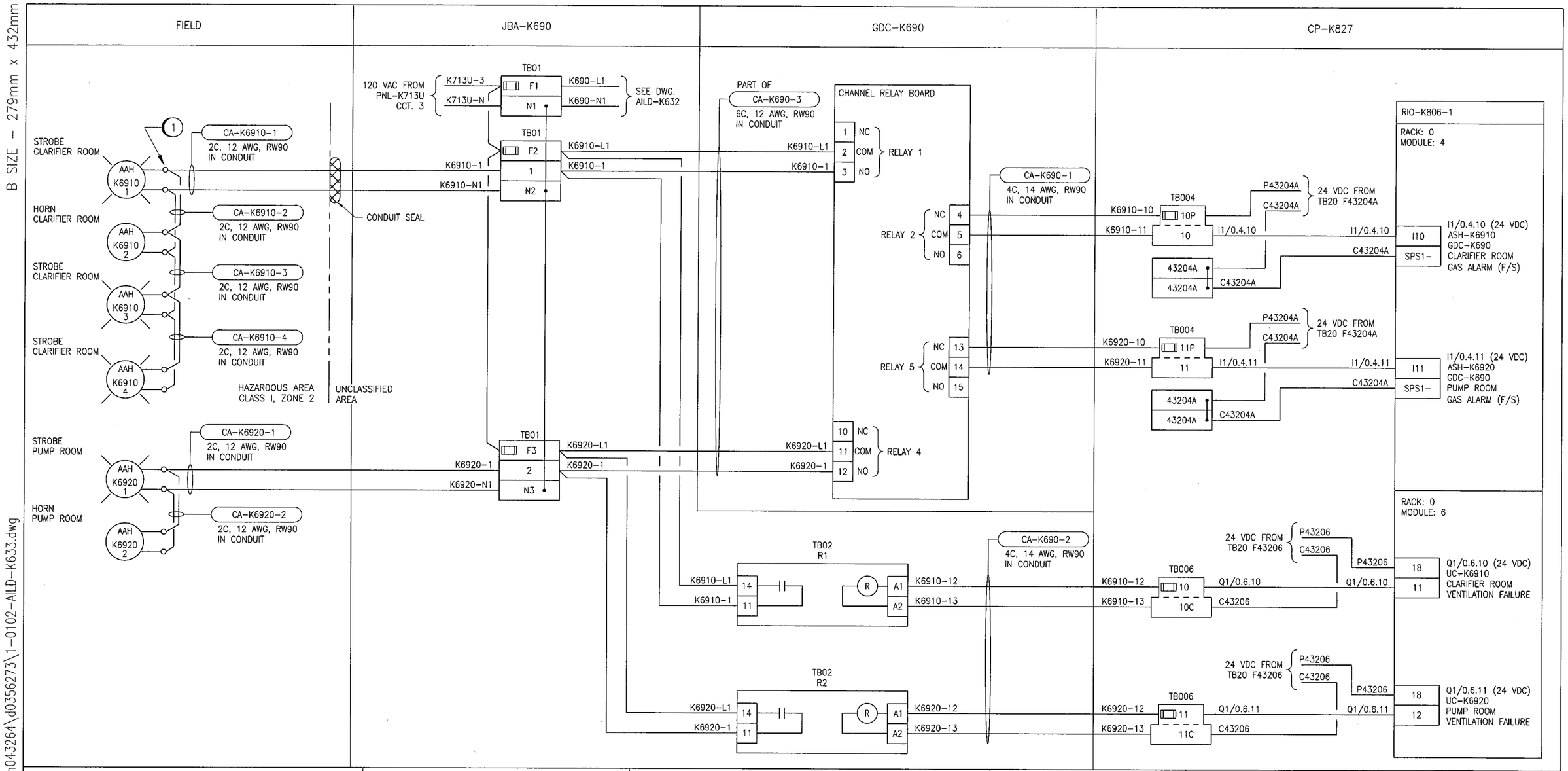

SPECIFIC NOTES:

(1) PROVIDE CONDUIT SEALS AS REQUIRED.

APEGM Certificate of Authorization
SNC-Lavalin Inc.
No. 4489

NO.	REVISIONS	DATE	DESIGN	CHECK
00	ISSUED FOR CONSTRUCTION - 976-2016	2017/04/05	SSB	TMC

SNC·LAVALIN CH2MHILL KGS GROUP CONSULTING ENGINEERS

DESIGNED BY: S. BOGHOSIAN	CHECKED BY: T. CHURCH
DRAWN BY: S. BOGHOSIAN	APPROVED BY: E. RYCZKOWSKI
SCALE: NTS	DATE: 2015/08/17
ISSUED FOR CONSTRUCTION BY: J. SHUMKA	DATE: 2017/04/05
CONSULTANT NO.: 474248	

ENGINEER'S SEAL
PROVINCE OF MANITOBA
T.M. CHURCH
Member 32682
REGISTERED PROFESSIONAL ENGINEER
Apr. 5, 2017

Winnipeg
THE CITY OF WINNIPEG
WATER AND WASTE DEPARTMENT

SOUTH END WATER POLLUTION CONTROL CENTRE
SEWPCC UPGRADING/EXPANSION PROJECT
AUTOMATION - LOOP DIAGRAM
AAH-K6901-1, 2, 3, 4 AND AAH-K6920-1, 2, 3
CLARIFIER ROOM & PUMP ROOM GAS DETECTION

CITY DRAWING NUMBER	SHEET	REV.	SIZE
1-0102-AILD-K633	001	00	B

B SIZE - 279mm x 432mm

LAST SAVE: 2017/04/01 - 10:46am
PATH: C:\pw_workdir\ch2mhill_wbg\sh043264\d0356273\1-0102-AILD-K633.dwg

PLOT DATE: Apr 01, 2017 - 10:46am
FILE NAME: 1-0102-AILD-K633.dwg