A1 SIZE – 594mm x 841mm

FUSE SCHEDULE

TB	IDENTIFIER	SIZE	RATING
TB20	F0300	5x20mm	5A TD
	F0301A	5x20mm	0.5A FA
	F0301B	5x20mm	0.5A FA
	F0302A	5x20mm	0.5A FA
	F0302B	5x20mm	0.5A FA
	F0303A	5x20mm	0.5A FA
	F0303B	5x20mm	0.5A FA
	F0304	5x20mm	0.5A FA
	F0305	5x20mm	5A FA
	F0306	5x20mm	5A FA
	F0307	5x20mm	5A FA
	F0308	5x20mm	5A FA
	F0309	5x20mm	5A FA
	F0310	5x20mm	5A FA
	F0311	5x20mm	5A FA
	F0312	5x20mm	5A FA
	F0313	5x20mm	5A FA
	F0314	5x20mm	5A FA
	F0315	5x20mm	5A FA
TB21	F03151	5x20mm	0.5A FA
	F03152	5x20mm	0.5A FA
	F03153	5x20mm	0.5A FA
	F03154	5x20mm	0.5A FA
	F03155	5x20mm	0.5A FA
	F03156	5x20mm	0.5A FA
	F03157	5x20mm	0.5A FA
TB22	F0400	5x20mm	5A TD
	F0410	5x20mm	5A FA
	F0411	5x20mm	5A FA
	F0412	5x20mm	5A FA
	F0413	5x20mm	5A FA
TB23	F2821	5x20mm	1A FA
	F2822	5x20mm	1A FA
	F2823	5x20mm	1A FA

NOTES
FA = FAST ACTING
TD = TIME DELAY

POWER CONSUMPTION SCHEDULE AT 24 VDC

LOAD	QTY.	CURRENT (mA)	RM01 CURRENT (mA)	RM02 CURRENT (mA)	NOTES
RIO–K800–1	1	1650	1650	–	1
DISCRETE INPUTS	96	2.5	240	–	2
DISCRETE OUTPUTS	64	50	3200	–	3
ANALOG INPUTS	16	20	320	–	2
LED24V15	2	500	–	1000	2
LSL–K2502	1	84	84	–	2
LSL–K2503	1	84	84	–	1
LSH–K1144	1	84	84	–	1
LSH–K1244	1	84	84	–	1
LSH–K2504	1	84	84	–	1
FSL–K1154	1	146	146	–	1
FSL–K1254	1	146	146	–	1
TOTAL			6122	1000	

NOTES
1. BASED ON MAXIMUM SUPPLY CURRENT ON POWER SUPPLY DATA SHEET.
2. BASED ON DATA SHEET.
3. ESTIMATED.

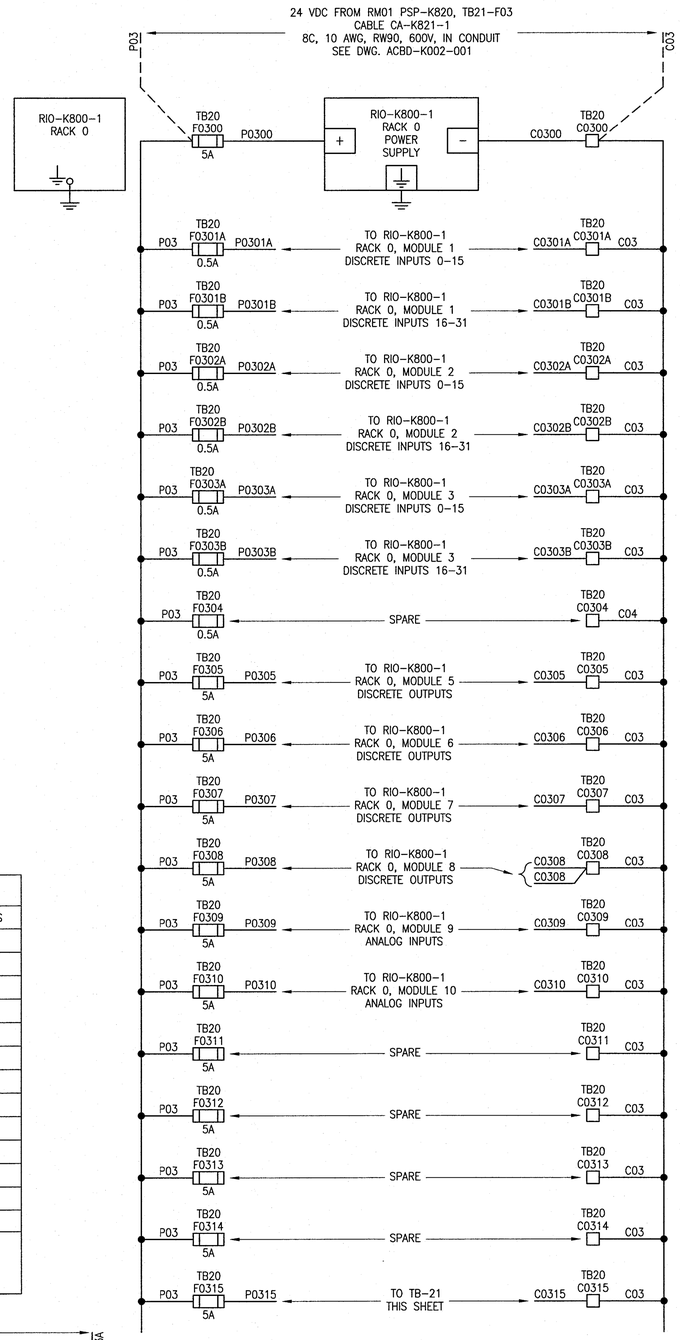

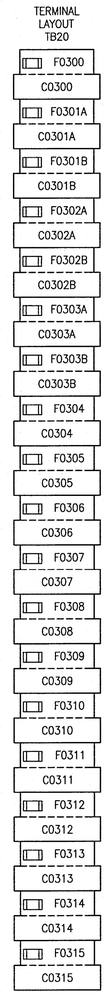

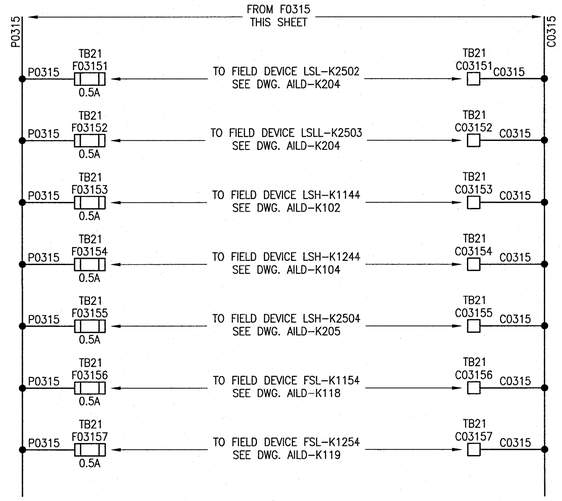

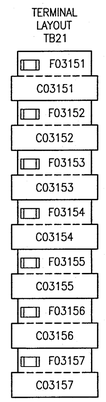

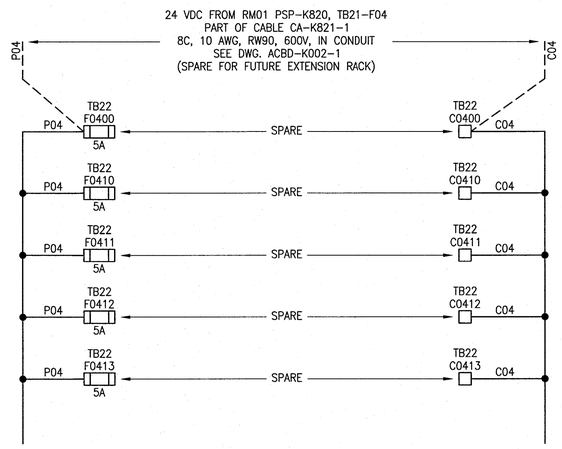

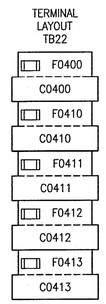

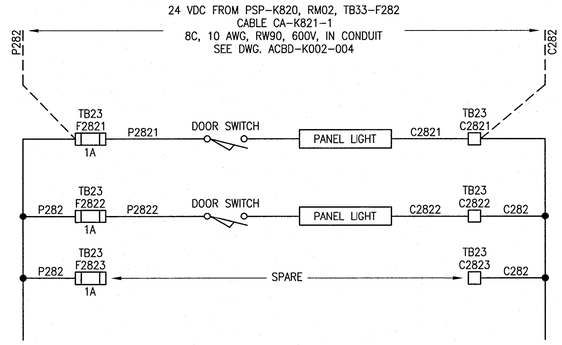

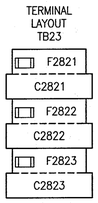

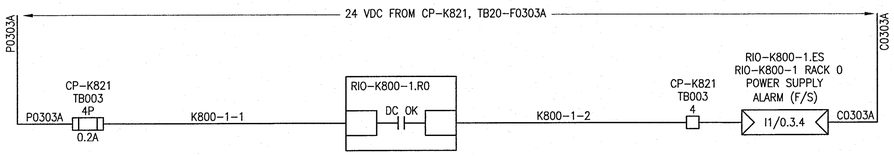

LEGEND:

EQUIPMENT GROUND

REFERENCE DRAWINGS	DESCRIPTION
–	–

APEGM Certificate of Authorization
SNC-Lavalin Inc.
No. 4489

NO.	REVISIONS	DATE	DESIGN	CHECK
00	ISSUED FOR CONSTRUCTION – 976–2016	2017/04/05	MW	PC

CH2MHILL. SNC·LAVALIN KGS GROUP

DESIGNED BY: M. WANG	CHECKED BY: P. CHICATUN
DRAWN BY: M. WANG	APPROVED BY: E. RYCZKOWSKI
SCALE: NTS	ISSUED FOR CONSTRUCTION BY: J. SHUMKA
DATE: 2015/03/24	DATE: 2017/04/05
CONSULTANT NO.: 474248	

ENGINEER'S SEAL
PROVINCE OF MANITOBA
CHICATUN
Member 30307
REGISTERED PROFESSIONAL ENGINEER
APR. 4, 2017
REV. 00

Winnipeg
THE CITY OF WINNIPEG
WATER AND WASTE DEPARTMENT

SOUTH END WATER POLLUTION CONTROL CENTRE
SEWPCC UPGRADING/EXPANSION PROJECT
AUTOMATION – POWER DISTRIBUTION SCHEMATIC
HIGH RATE CLARIFICATION BUILDING
CP–K821, PROCESS RIO CABINET – RIO–K800–1

CITY DRAWING NUMBER	SHEET	REV.	SIZE
1–0102–ACBD–K011	001	00	A1

LAST SAVE: 2017/04/01 – 10:24am
PATH: C:\pw_workdir\ch2mhill_wbg\sh043264\d0356273\1–0102–ACBD–K011.dwg

PLOT DATE: Apr 01, 2017 – 10:24am
FILE NAME:1–0102–ACBD–K011.dwg