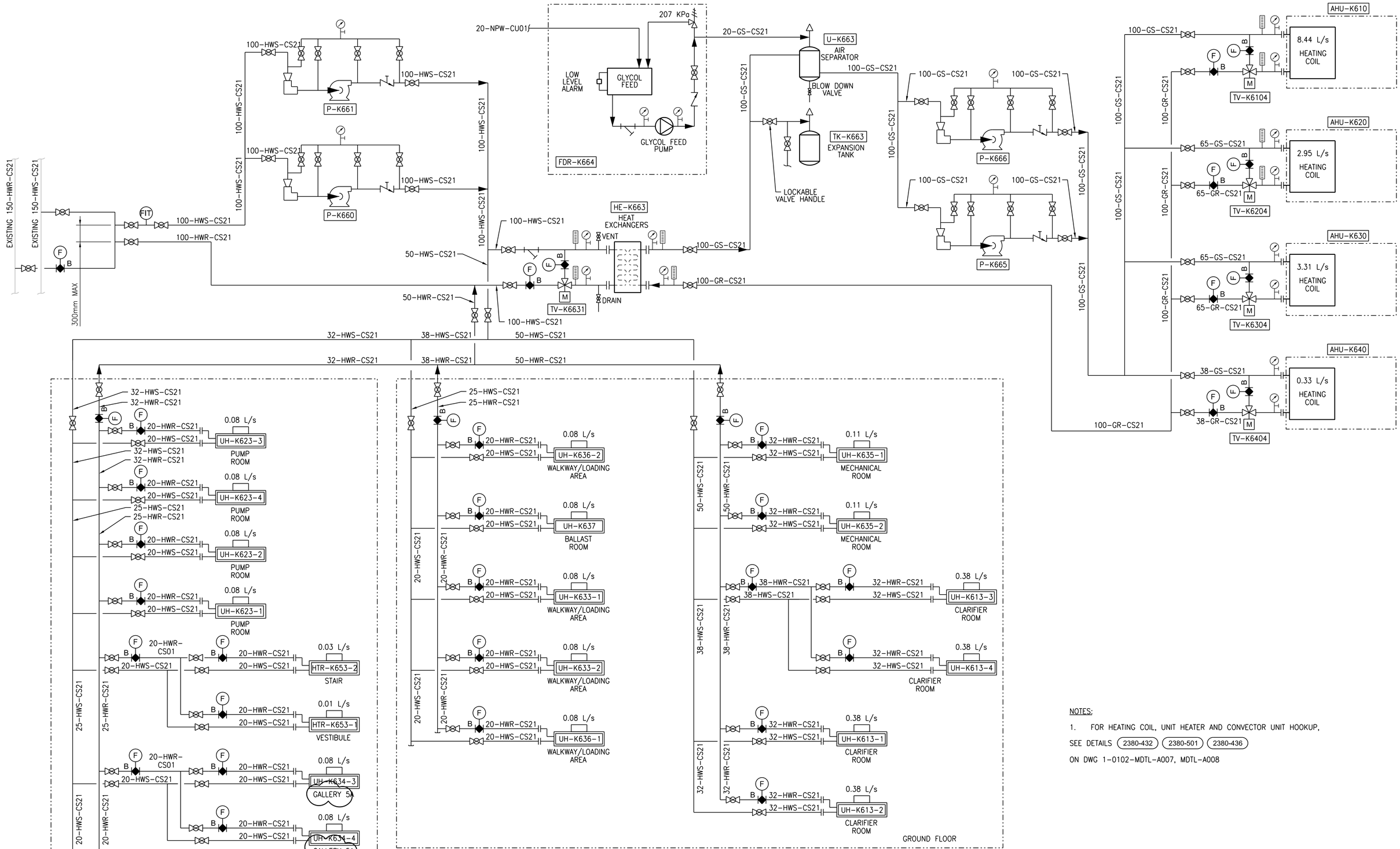

NOTES:

1. FOR HEATING COIL, UNIT HEATER AND CONVECTOR UNIT HOOKUP, SEE DETAILS (2380-432) (2380-501) (2380-436) ON DWG 1-0102-MDTL-A007, MDTL-A008

APEGM
Certificate of Authorization
CH2M HILL Canada Ltd.
No. 1441

NO.	REVISIONS	DATE	DESIGN	CHECK
00	ISSUED FOR CONSTRUCTION - 976-2016	2017/04/05	K.F.	J.C.

CH2MHILL. KGS GROUP SNC·LAVALIN

DESIGNED BY: R. BLACKWOOD	CHECKED BY: T. TRAN
DRAWN BY: K. FONG	APPROVED BY: H.T. FREIHAMMER
SCALE: NTS	ISSUED FOR CONSTRUCTION BY: J. SHUMKA
DATE: 2017/04/05	DATE: 2017/04/05
CONSULTANT NO.: 474248	

ENGINEER'S SEAL
April 6, 2017
PROVINCE OF MANITOBA
R.P.C. BLACKWOOD
Member 40579
REGISTERED PROFESSIONAL ENGINEER

Winnipeg
THE CITY OF WINNIPEG
WATER AND WASTE DEPARTMENT

SOUTH END WATER POLLUTION CONTROL CENTRE
SEWPCC UPGRADING/EXPANSION PROJECT
MECHANICAL
HIGH RATE CLARIFICATION BUILDING
SECONDARY HOT WATER HEATING AND GLYCOL HEATING LOOPS

CITY DRAWING NUMBER	SHEET	REV.	SIZE
1-0102-MSLD-K602	001	00	A1

PLOT DATE: 2017\03\30
FILE NAME: 1-0102-MSLD-K602.dgn

A1 SIZE - 594mm x 841mm
©CH2M HILL 2017. ALL RIGHTS RESERVED.