A1 SIZE – 594mm x 841mm

FUSE SCHEDULE

TB	IDENTIFIER	SIZE	RATING
TB31	F081	5x20mm	1A FA
	F082	5x20mm	2.5A TD
	F083	5x20mm	2.5A TD
	F084	5x20mm	2.5A TD
	F085	5x20mm	2A TD
TB32	F091	5x20mm	2A TD
	F092	5x20mm	2A TD
	F093	5x20mm	2A TD
	F094	5x20mm	2A TD
	F095	5x20mm	2A TD
TB33	F281	5x20mm	2.5A TD
	F282	5x20mm	2.5A FA
	F283	5x20mm	2.5A TD
	F284	5x20mm	2.5A TD
	F285	5x20mm	2.5A TD
TB34	F291	5x20mm	2A TD
	F292	5x20mm	2A TD
	F293	5x20mm	2A TD
	F294	5x20mm	2A TD
	F295	5x20mm	2A TD
TB35	F481	5x20mm	2A TD
	F482	5x20mm	2A TD
	F483	5x20mm	2A TD
	F484	5x20mm	2A TD
	F485	5x20mm	2A TD
TB36	F491	5x20mm	2A TD
	F492	5x20mm	2A TD
	F493	5x20mm	2A TD
	F494	5x20mm	2A TD
	F495	5x20mm	2A TD

NOTES
FA = FAST ACTING
TD = TIME DELAY

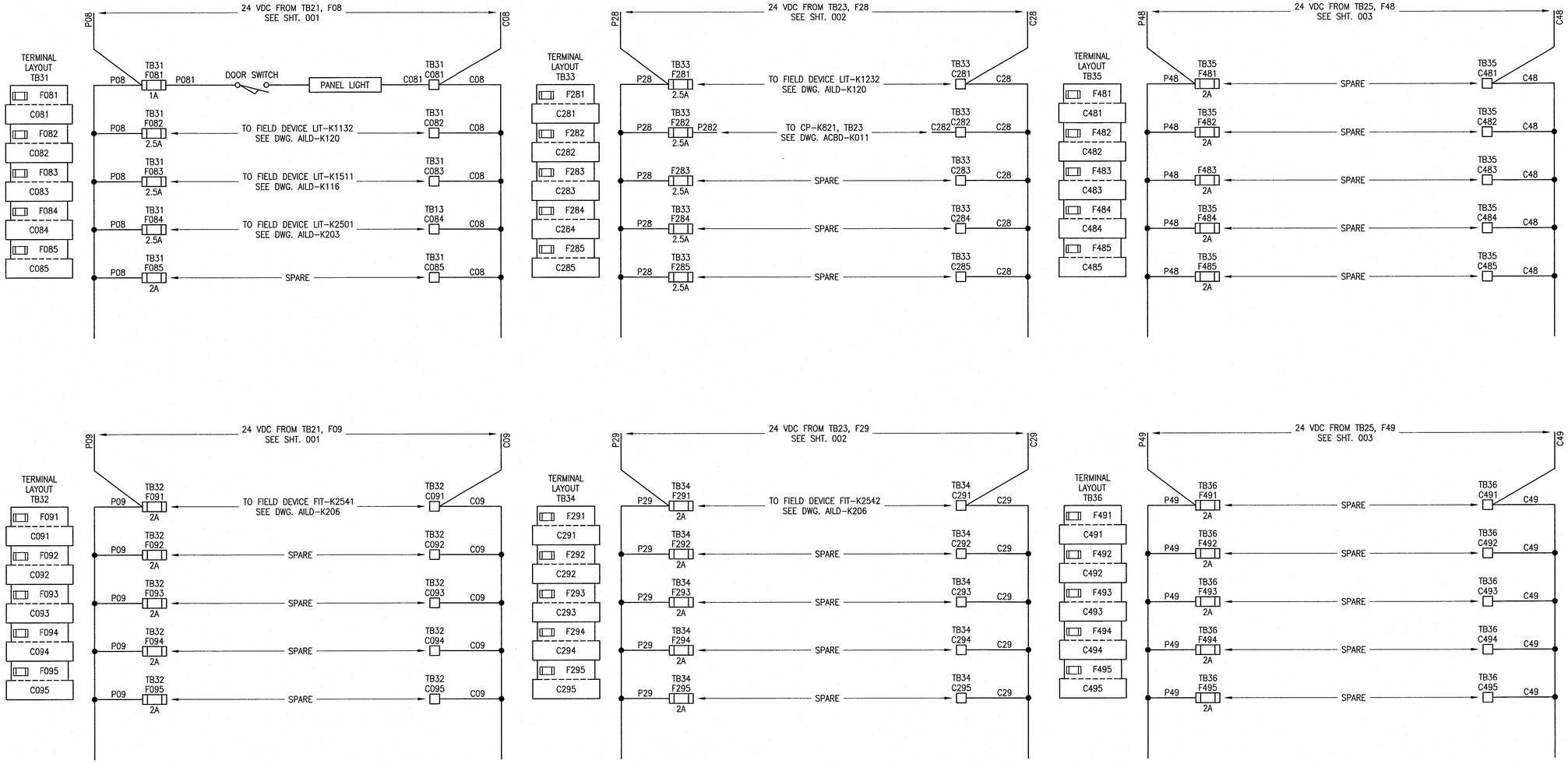

REFERENCE DRAWINGS	DESCRIPTION
–	–

APEGM Certificate of Authorization
SNC-Lavalin Inc.
No. 4489

NO.	REVISIONS	DATE	DESIGN	CHECK
00	ISSUED FOR CONSTRUCTION – 976-2016	2017/04/05	MW	PC

CH2MHILL. SNC·LAVALIN KGS GROUP

DESIGNED BY: M. WANG	CHECKED BY: P. CHICATUN
DRAWN BY: M. WANG	APPROVED BY: E. RYCZKOWSKI
SCALE: NTS	ISSUED FOR CONSTRUCTION BY: J. SHUMKA
DATE: 2015/07/21	DATE: 2017/04/05
CONSULTANT NO.: 474248	

ENGINEER'S SEAL
PROVINCE OF MANITOBA
CHICATUN Member 30307
REGISTERED PROFESSIONAL ENGINEER
Apr. 4, 2017
REVISED

Winnipeg
THE CITY OF WINNIPEG
WATER AND WASTE DEPARTMENT

SOUTH END WATER POLLUTION CONTROL CENTRE
SEWPCC UPGRADING/EXPANSION PROJECT
AUTOMATION – POWER DISTRIBUTION SCHEMATIC
HIGH RATE CLARIFICATION BUILDING
PSP-K820 POWER SUPPLY CABINET

CITY DRAWING NUMBER	SHEET	REV.	SIZE
1-0102-ACBD-K002	004	00	A1

PLOT DATE: Apr 01, 2017 – 10:23am
FILE NAME: 1-0102-ACBD-K002-004.dwg

LAST SAVE: 2017/04/01 – 10:23am
PATH: C:\pw_workdir\ch2mhill_wbg\sh043264\d0356273\1-0102-ACBD-K002-004.dwg