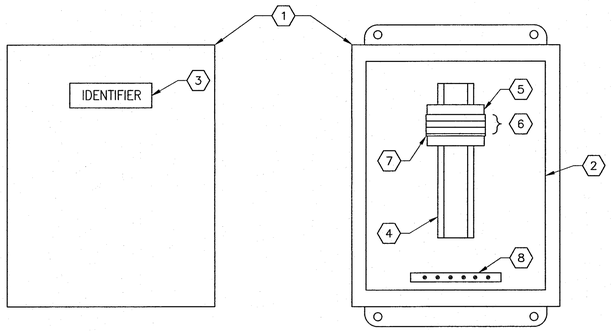

EXTERIOR PANEL VIEW
1 : 3

INTERIOR PANEL VIEW
1 : 3

TYPICAL NEMA 4X JUNCTION BOX

BILL OF MATERIAL

ITEM	QTY	DESCRIPTION	MANUFACTURER	CATALOG NUMBER
1	AS REQ'D	NEMA 4X ENCL. CONTINUOUS–HINGE WITH CLAMPS, 254x203x102mm	HOFFMAN	A1008CHNFSS6
2	AS REQ'D	PANEL FOR ITEM 1	HOFFMAN	A10P8
3	AS REQ'D	LAMACOIDS	–	
4	AS REQ'D	35mm DIN RAIL	PHOENIX CONTACT	0801733
5	AS REQ'D	TERMINAL END CLAMP – CLIPFIX 35	PHOENIX CONTACT	3022218
6	AS REQ'D	FEED THROUGH TERMINAL – UT 4–MTD	PHOENIX CONTACT	3046184
7	AS REQ'D	TERMINAL END PLATE – D–UT 2,5/4 TWIN	PHOENIX CONTACT	3047141
8	AS REQ'D	GROUND BAR, 6 TAPS	ILSCO	0167–6

JUNCTION BOX SCHEDULE

IDENTIFIER	NUMBER OF TERMINALS	DESCRIPTION
JBA–D6111	7	EXHAUST FAN EF–D611 DAMPER XV–D6111
JBA–D6113	7	EXHAUST FAN EF–D611 DAMPER XV–D6113
JBA–D6121	7	EXHAUST FAN EF–D612 DAMPER XV–D6121
JBA–D6123	7	EXHAUST FAN EF–D612 DAMPER XV–D6123
JBA–D4502	6	WAS FILTRATE TANK LEVEL SWITCHES LSH–D4502 AND LSL–D4502
JBA–D4602	6	FSL FILTRATE TANK LEVEL SWITCHES LSH–D4602 AND LSL–D4602

REFERENCE DRAWINGS	DESCRIPTION
--	--

1:3 30 0 60 120

APEGM Certificate of Authorization
SNC-Lavalin Inc.
No. 4489

NO.	REVISIONS	DATE	DESIGN	CHECK
00	ISSUED FOR CONSTRUCTION – 976–2017	2017/04/05	SSB	TMC

CH2MHILL.
SNC·LAVALIN
KGS GROUP CONSULTING ENGINEERS

DESIGNED BY: S. BOGHOSIAN	CHECKED BY: T. CHURCH
DRAWN BY: S. BOGHOSIAN	APPROVED BY: E. RYCZKOWSKI
SCALE: 1:3	ISSUED FOR CONSTRUCTION BY: J. SHUMKA
DATE: 2016/09/06	DATE: 2017/04/05
CONSULTANT NO.: 474248	

ENGINEER'S SEAL
PROVINCE OF MANITOBA
T.M. CHURCH
Member
32682
REGISTERED PROFESSIONAL ENGINEER
Apr. 3, 2017

Winnipeg
THE CITY OF WINNIPEG
WATER AND WASTE DEPARTMENT

SOUTH END WATER POLLUTION CONTROL CENTRE
SEWPCC UPGRADING/EXPANSION PROJECT
AUTOMATION – CABINET LAYOUT
FERMENTERS/THICKENERS
JUNCTION BOXES

CITY DRAWING NUMBER	SHEET	REV.	SIZE
1–0102–ACBD–D081	002	00	A1

A1 SIZE – 594mm x 841mm

LAST SAVE: 2017/04/01 – 10:15am
PATH: C:\pw_workdir\ch2mhill_wbg\sh043264\d0356273\1–0102–ACBD–D081–002.dwg

PLOT DATE: Apr 01, 2017 – 10:15am

FILE NAME:1–0102–ACBD–D081–002.dwg