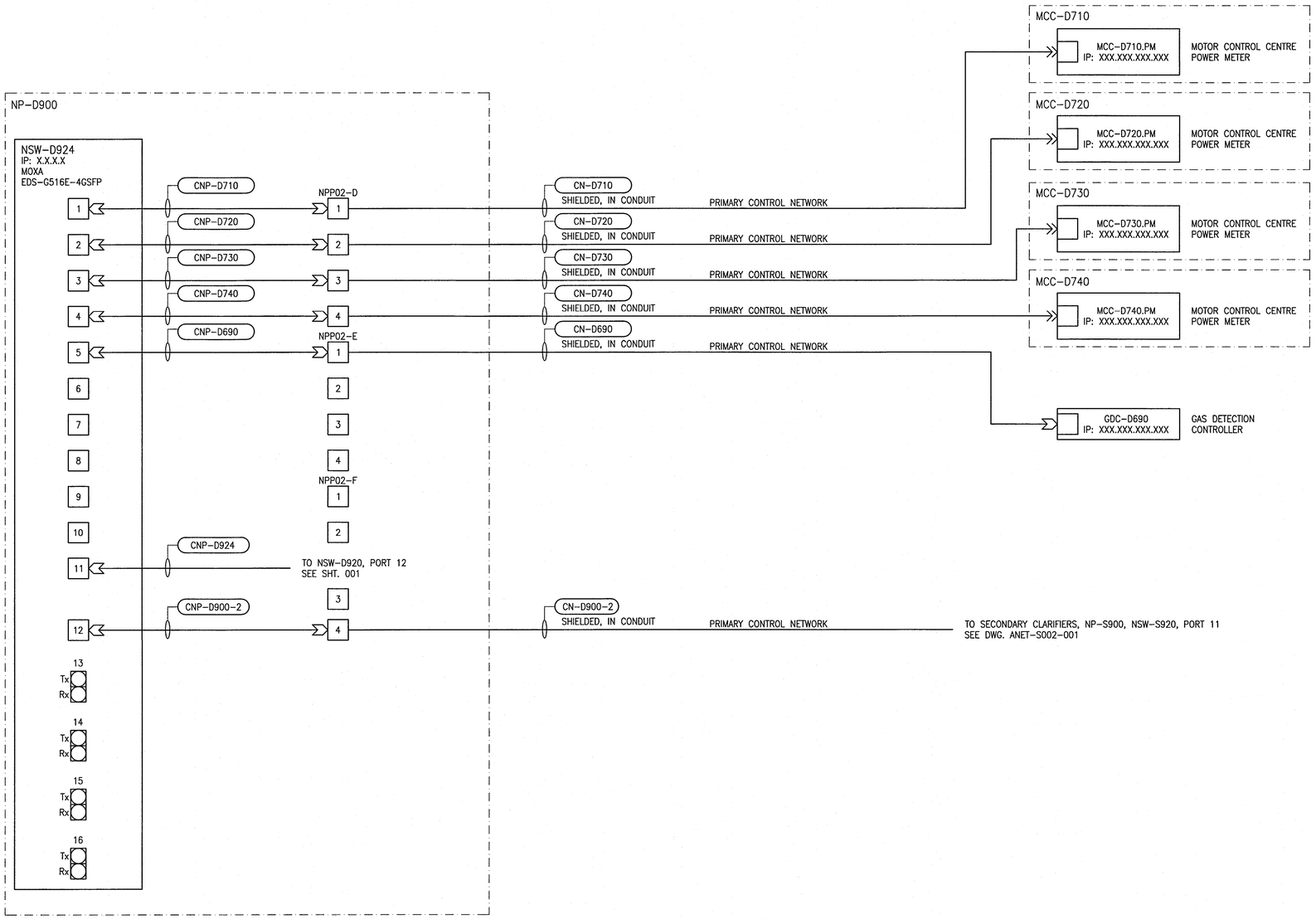

LEGEND:

- X — RJ45 PORT OR PATCH PANEL
- FIBRE PORT OR PATCH PANEL
- WALL PLATE RJ45 JACK
- CAT6 CABLE
- FIBRE CABLE
- FIBRE CONNECTOR
- RJ45 CONNECTOR UNSHIELDED
- RJ45 CONNECTOR SHIELDED

REFERENCE DRAWINGS	DESCRIPTION
1-0102-ANET-A001	SUPERVISORY, CONTROL AND SERVER NETWORK OVERVIEW
1-0102-ABDG-D001	CONTROL SYSTEM ARCHITECTURE, FERMENTERS/THICKENERS/BIOFILTERS

APEGM Certificate of Authorization
SNC-Lavalin Inc.
No. 4489

NO.	REVISIONS	DATE	DESIGN	CHECK
00	ISSUED FOR CONSTRUCTION - 976-2016	2017/04/05	PC	TMC

CH2MHILL. SNC·LAVALIN KGS GROUP

DESIGNED BY: P. CHICATUN	CHECKED BY: T. CHURCH
DRAWN BY: M. WANG	APPROVED BY: E. RYCZKOWSKI
SCALE: NTS	ISSUED FOR CONSTRUCTION BY: J. SHUMKA
DATE: 2016/08/15	DATE: 2017/04/05
CONSULTANT NO.: 474248	

ENGINEER'S SEAL
PROVINCE OF MANITOBA
CHICATUN
Member
30307
REGISTERED PROFESSIONAL ENGINEER
APR. 11 2017
REV. 00

Winnipeg
THE CITY OF WINNIPEG
WATER AND WASTE DEPARTMENT

SOUTH END WATER POLLUTION CONTROL CENTRE
SEWPCC UPGRADING/EXPANSION PROJECT
AUTOMATION - NETWORK DIAGRAM
FERMENTERS/THICKENERS/BIOFILTERS
CONTROL NETWORK

CITY DRAWING NUMBER	SHEET	REV.	SIZE
1-0102-ANET-D002	002	00	A1

PLOT DATE: Apr 01, 2017 - 10:45am
FILE NAME: 1-0102-ANET-D002-002.dwg

A1 SIZE - 594mm x 841mm
LAST SAVE: 2017/04/01 - 10:45am
PATH: C:\pw_workdir\ch2mhill_wbg\sh043264\d0356273\1-0102-ANET-D002-002.dwg