B SIZE - 279mm x 432mm

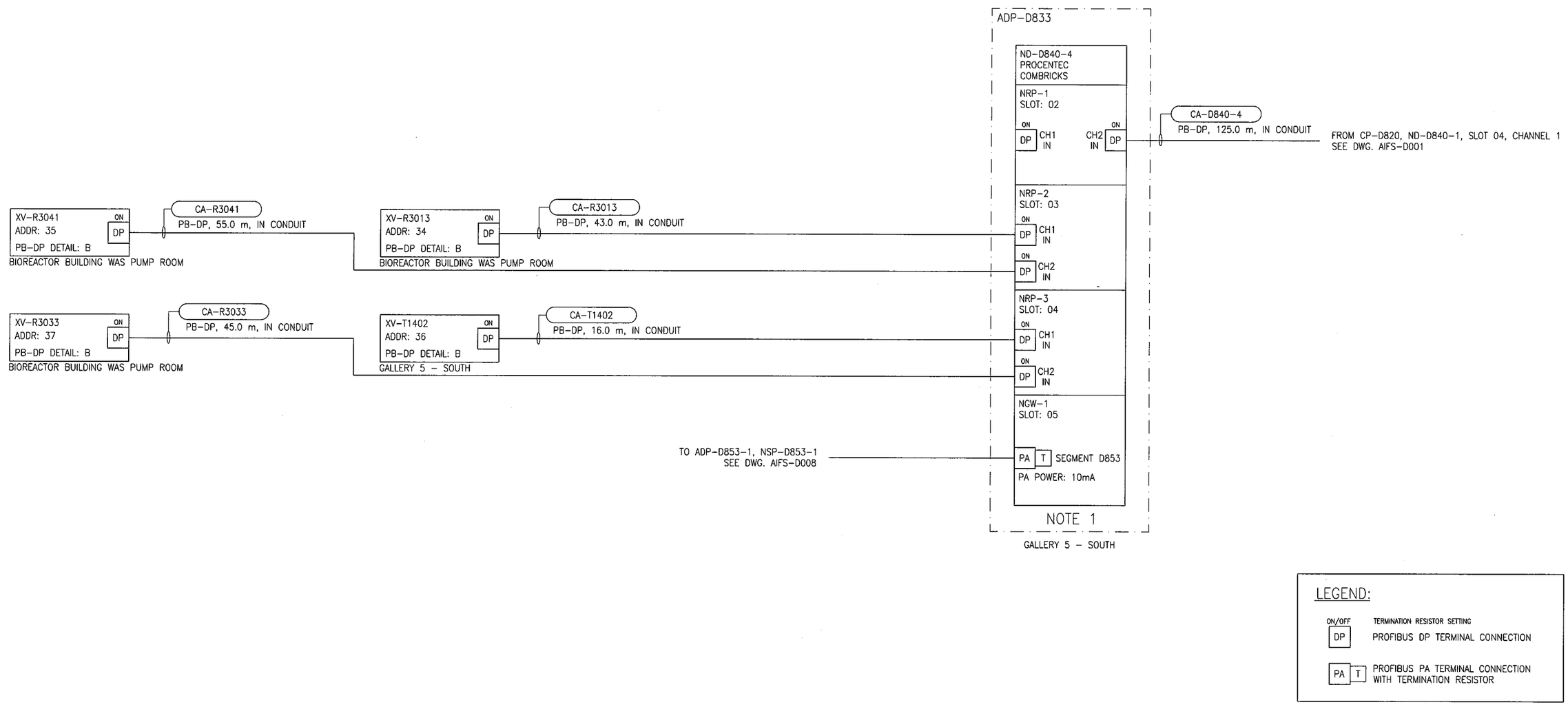


NOTES:

1. ALL PROFIBUS MODULES SET TO NETWORK 1 WITH DIP SWITCHES.
2. PROFIBUS DP NETWORK DESIGNED FOR 1.5Mbps BUT OPERATED AT 500Kbps.
3. REFER TO 1-0102-ADTL-A020 FOR PROFIBUS DP WIRING DETAILS.
4. ALL PROFIBUS PA MODULES SET TO LINK MODE.

APEGM Certificate of Authorization
SNC-Lavalin Inc.
No. 4489

| NO. | REVISIONS | DATE | DESIGN | CHECK |
|---|---|---|---|---|
| 00 | ISSUED FOR CONSTRUCTION - 976-2016 | 2017/04/05 | MW | PC |

SNC·LAVALIN CH2MHILL KGS GROUP CONSULTING ENGINEERS

| | |
|---|---|
| DESIGNED BY: M. WANG | CHECKED BY: P. CHICATUN |
| DRAWN BY: M. WANG | APPROVED BY: E. RYCZKOWSKI |
| SCALE: NTS | DATE: 2016/07/14 |
| ISSUED FOR CONSTRUCTION BY: J. SHUMKA | DATE: 2017/04/05 |
| CONSULTANT NO.: 474248 | |

ENGINEER'S SEAL
PROVINCE OF MANITOBA
P. CHICATUN
CHICATUN
Member
30307
REGISTERED PROFESSIONAL ENGINEER
APR. 4 2017
REV. 00

Winnipeg
THE CITY OF WINNIPEG
WATER AND WASTE DEPARTMENT

SOUTH END WATER POLLUTION CONTROL CENTRE
SEWPCC UPGRADING/EXPANSION PROJECT
AUTOMATION - PROFIBUS SEGMENT DIAGRAM
FERMENTERS/THICKENERS/BIOFILTERS - BRANCH 1
PROFIBUS DP SEGMENT ND-D840-4

| CITY DRAWING NUMBER | SHEET | REV. | SIZE |
|---|---|---|---|
| 1-0102-AIFS-D004 | 001 | 00 | B |

LAST SAVE: 2017/04/01 - 9:50am
PATH: C:\pw_workdir\ch2mhill_wbg\sh043264\d0356273\1-0102-AIFS-D004.dwg

PLOT DATE: Apr 01, 2017 - 9:50am
FILE NAME: 1-0102-AIFS-D004.dwg