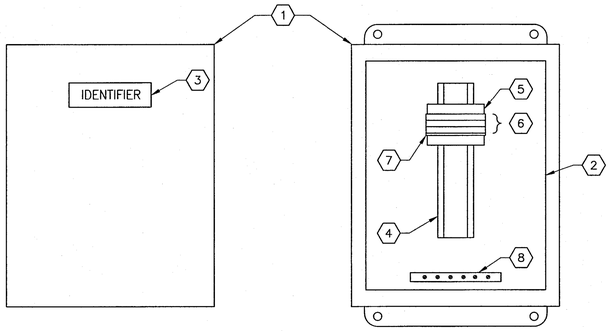

EXTERIOR PANEL VIEW
1 : 3

INTERIOR PANEL VIEW
1 : 3

TYPICAL NEMA 12 JUNCTION BOX

BILL OF MATERIAL				
ITEM	QTY	DESCRIPTION	MANUFACTURER	CATALOG NUMBER
1	AS REQ'D	NEMA 12 ENCL. CONTINUOUS-HINGE WITH CLAMPS, 254x203x102mm	HOFFMAN	A1008CH
2	AS REQ'D	PANEL FOR ITEM 1	HOFFMAN	A10P8
3	AS REQ'D	LAMACOIDS	–	
4	AS REQ'D	35mm DIN RAIL	PHOENIX CONTACT	0801733
5	AS REQ'D	TERMINAL END CLAMP – CLIPFIX 35	PHOENIX CONTACT	3022218
6	AS REQ'D	FEED THROUGH TERMINAL – UT 4-MTD	PHOENIX CONTACT	3046184
7	AS REQ'D	TERMINAL END PLATE – D-UT 2,5/4 TWIN	PHOENIX CONTACT	3047141
8	AS REQ'D	GROUND BAR, 6 TAPS	ILSCO	0167-6

JUNCTION BOX SCHEDULE		
IDENTIFIER	NUMBER OF TERMINALS	DESCRIPTION
JBA-D9611	3	RDT ROOM EXTERIOR DOOR
JBA-D9612	3	RDT ROOM OVERHEAD DOOR
JBA-D9613	3	RDT ROOM OVERHEAD DOOR FROM TRUCKBAY
JBA-D9621	3	ELECTRICAL ROOM A EXTERIOR DOOR
JBA-D9631	3	JUNCTION CHAMBER EXTERIOR DOOR
JBA-D9641	3	ELECTRICAL ROOM B DOOR

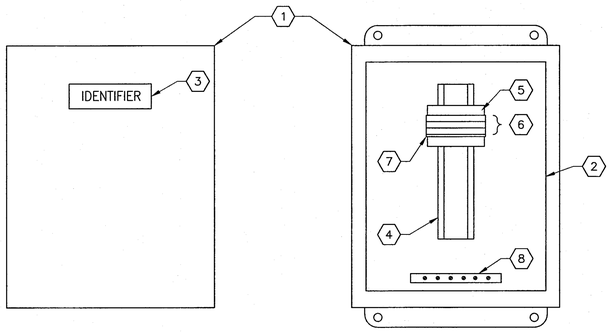

EXTERIOR PANEL VIEW
1 : 3

INTERIOR PANEL VIEW
1 : 3

TYPICAL NEMA 4 JUNCTION BOX

BILL OF MATERIAL				
ITEM	QTY	DESCRIPTION	MANUFACTURER	CATALOG NUMBER
1	AS REQ'D	NEMA 4 ENCL. CONTINUOUS-HINGE WITH CLAMPS, 254x203x102mm	HOFFMAN	A1008CHNF
2	AS REQ'D	PANEL FOR ITEM 1	HOFFMAN	A10P8
3	AS REQ'D	LAMACOIDS	–	
4	AS REQ'D	35mm DIN RAIL	PHOENIX CONTACT	0801733
5	AS REQ'D	TERMINAL END CLAMP – CLIPFIX 35	PHOENIX CONTACT	3022218
6	AS REQ'D	FEED THROUGH TERMINAL – UT 4-MTD	PHOENIX CONTACT	3046184
7	AS REQ'D	TERMINAL END PLATE – D-UT 2,5/4 TWIN	PHOENIX CONTACT	3047141
8	AS REQ'D	GROUND BAR, 6 TAPS	ILSCO	0167-6

JUNCTION BOX SCHEDULE		
IDENTIFIER	NUMBER OF TERMINALS	DESCRIPTION
JBA-D3213	6	P-D321 SEAL WATER PSL-D3213 AND YV-D3213
JBA-D3223	6	P-D322 SEAL WATER PSL-D3223 AND YV-D3223
JBA-D3233	6	P-D323 SEAL WATER PSL-D3233 AND YV-D3233
JBA-D6211	7	EXHAUST FAN EF-D621 DAMPER XV-D6211

REFERENCE DRAWINGS	DESCRIPTION
--	--

1:3 30 0 60 120

APEGM Certificate of Authorization
SNC-Lavalin Inc.
No. 4489

NO.	REVISIONS	DATE	DESIGN	CHECK
00	ISSUED FOR CONSTRUCTION – 976-2017	2017/04/05	SSB	TMC

CH2MHILL. SNC·LAVALIN KGS GROUP

DESIGNED BY: S. BOGHOSIAN	CHECKED BY: T. CHURCH
DRAWN BY: S. BOGHOSIAN	APPROVED BY: E. RYCZKOWSKI
SCALE: 1:3	ISSUED FOR CONSTRUCTION BY: J. SHUMKA
DATE: 2016/09/06	DATE: 2017/04/05
CONSULTANT NO.: 474248	

ENGINEER'S SEAL
PROVINCE OF MANITOBA
T.M. CHURCH
Member 32682
REGISTERED PROFESSIONAL ENGINEER
Apr. 5, 2017

Winnipeg
THE CITY OF WINNIPEG
WATER AND WASTE DEPARTMENT

SOUTH END WATER POLLUTION CONTROL CENTRE
SEWPCC UPGRADING/EXPANSION PROJECT
AUTOMATION – CABINET LAYOUT
FERMENTERS/THICKENERS
JUNCTION BOXES

CITY DRAWING NUMBER	SHEET	REV.	SIZE
1-0102-ACBD-D081	001	00	A1

A1 SIZE – 594mm x 841mm

LAST SAVE: 2017/04/01 – 10:15am
PATH: C:\pw_workdir\ch2mhill_wbg\sh043264\d0356273\1-0102-ACBD-D081-001.dwg

PLOT DATE: Apr 01, 2017 – 10:15am

FILE NAME:1-0102-ACBD-D081-001.dwg