A1 SIZE – 594mm x 841mm

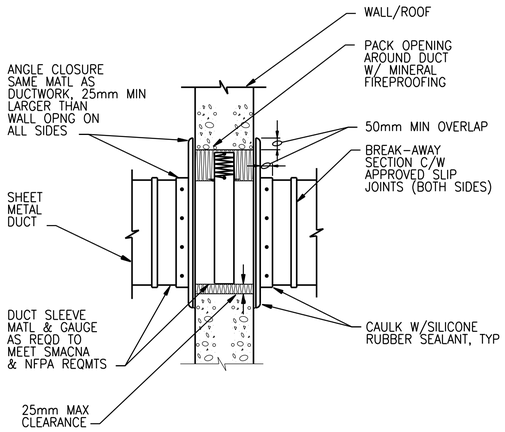

NOTES:

1. FLOOR PENETRATION SIMILAR.

DUCT WALL/ROOF PENETRATION, FIRE-DAMPERED OPENING

NTS

2333-808

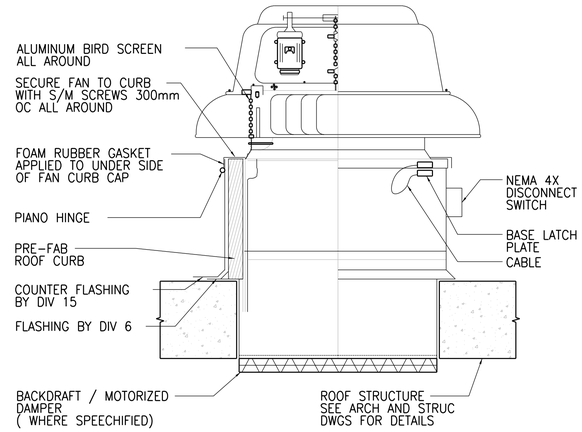

DUCTED ROOF MOUNTED FAN

NTS

2334-300

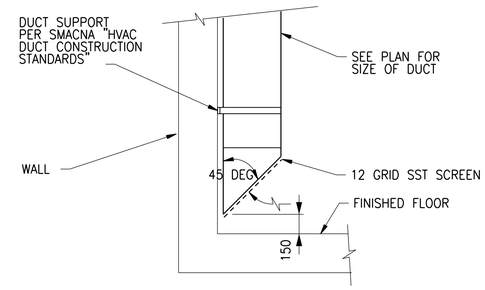

FLOOR EXHAUST DUCT

NTS

2337-805

©CH2M HILL 2017. ALL RIGHTS RESERVED.

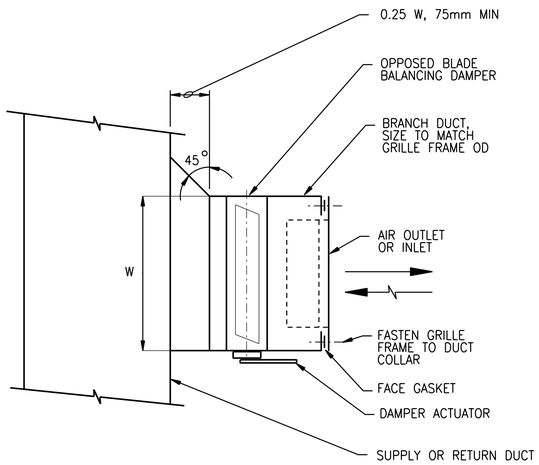

DUCT MOUNTED AIR OUTLET OR INLET

NTS

2337-809

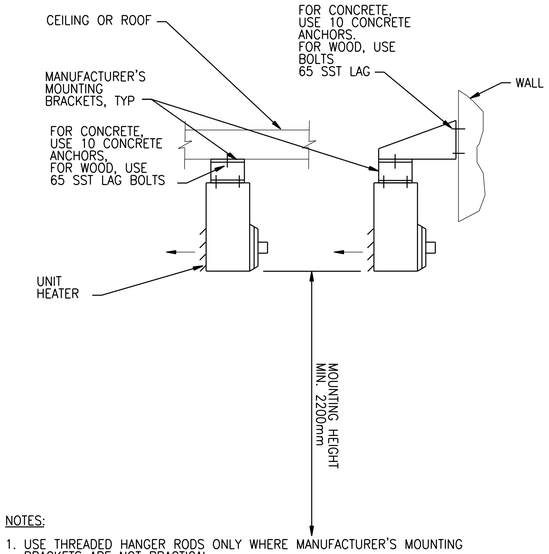

NOTES:

1. USE THREADED HANGER RODS ONLY WHERE MANUFACTURER'S MOUNTING BRACKETS ARE NOT PRACTICAL.

UNIT HEATER MOUNTING

NTS

2380-427

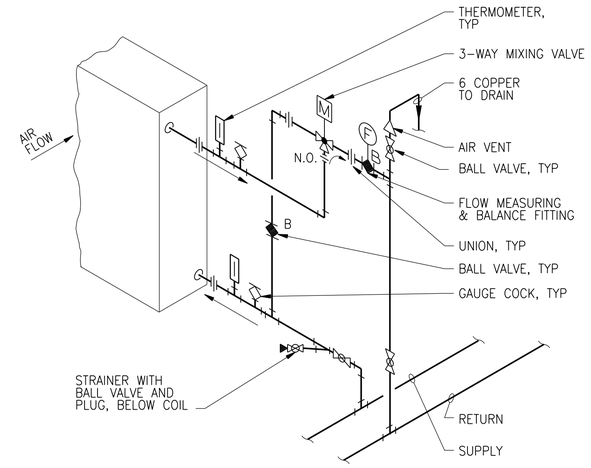

NOTES:

1. DETAIL GIVES REQUIRED SEQUENCE OF EQUIPMENT AND VALVES. PIPING ARRANGEMENT MAY VARY TO SUIT FIELD REQUIREMENTS. PIPE COIL FOR COUNTER FLOW WITH AIR.

HEATING COIL CONNECTION

NTS

2380-432

APEGM
Certificate of Authorization
CH2M HILL Canada Ltd.
No. 1441

NO.	REVISIONS	DATE	DESIGN	CHECK
02	ISSUED FOR CONSTRUCTION – 976-2016	2017/04/05	K.F.	J.C.
01	ISSUED FOR CONSTR – B.O. 899-2015	04/2016	K.F.	J.C.
00	ISSUED FOR ADD. 1 – B.O. 899-2015	02/2016	K.F.	J.C.

CH2MHILL
SNC·LAVALIN
KGS GROUP CONSULTING ENGINEERS

DESIGNED BY: T. TRAN	CHECKED BY: D. CUDDINGTON
DRAWN BY: K. FONG	APPROVED BY: H.T. FREIHAMMER
SCALE: NTS	ISSUED FOR CONSTRUCTION BY: J. SHUMKA
DATE: 2017/04/05	DATE: 2017/04/05
CONSULTANT NO.: 474248	

ENGINEER'S SEAL
PROVINCE OF MANITOBA
T.T. TRAN
Member 40578
REGISTERED PROFESSIONAL ENGINEER
Apr 19/17

Winnipeg
THE CITY OF WINNIPEG
WATER AND WASTE DEPARTMENT

SOUTH END WATER POLLUTION CONTROL CENTRE
SEWPCC UPGRADING/EXPANSION PROJECT
MECHANICAL
HVAC
STANDARD DETAILS (3)

CITY DRAWING NUMBER	SHEET	REV.	SIZE
1-0102-MDTL-A007		02	A1

PLOT DATE: 2017\03\29
FILE NAME: 1-0102-MDTL-A007.dgn