A1 SIZE – 594mm x 841mm

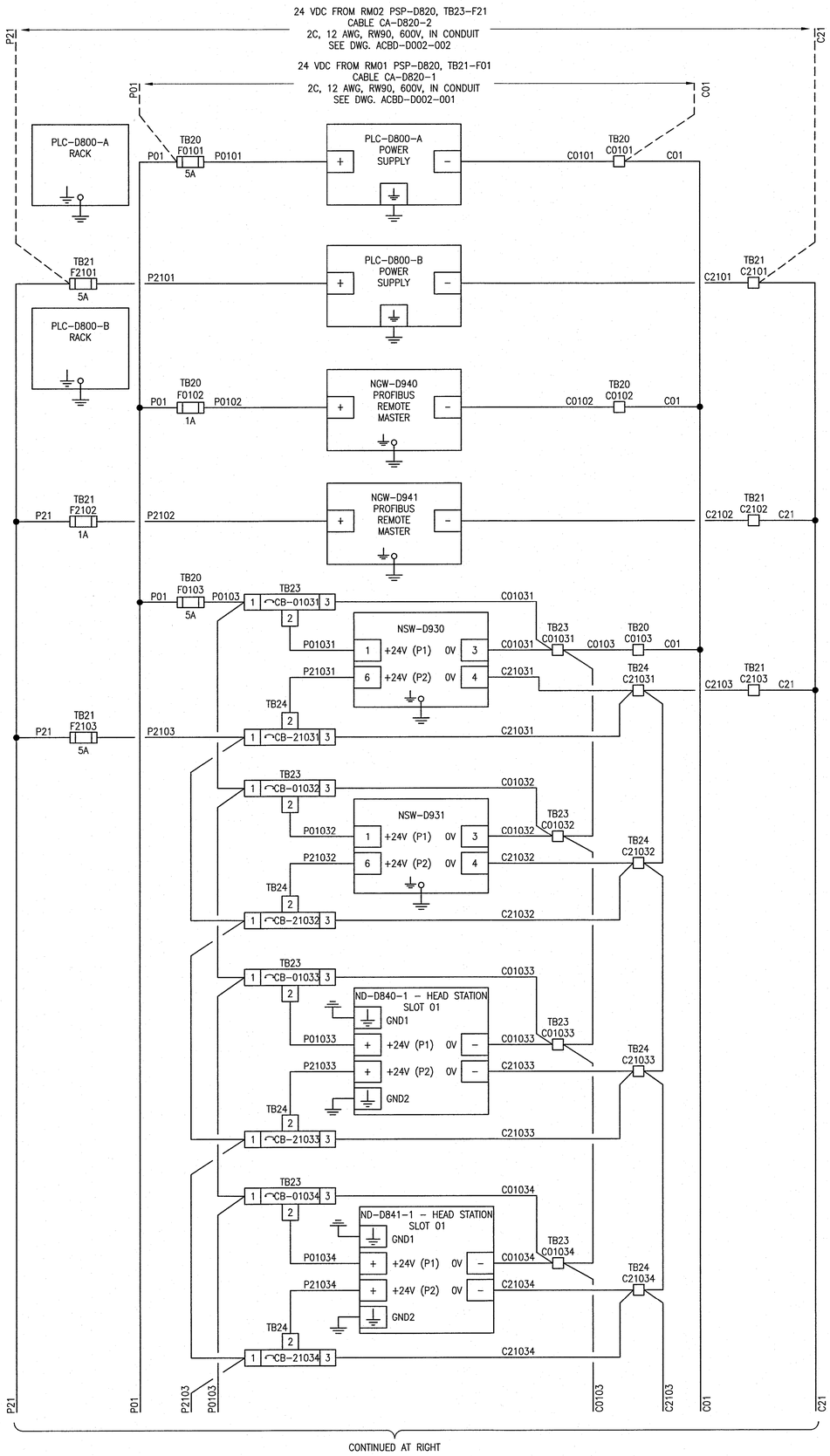

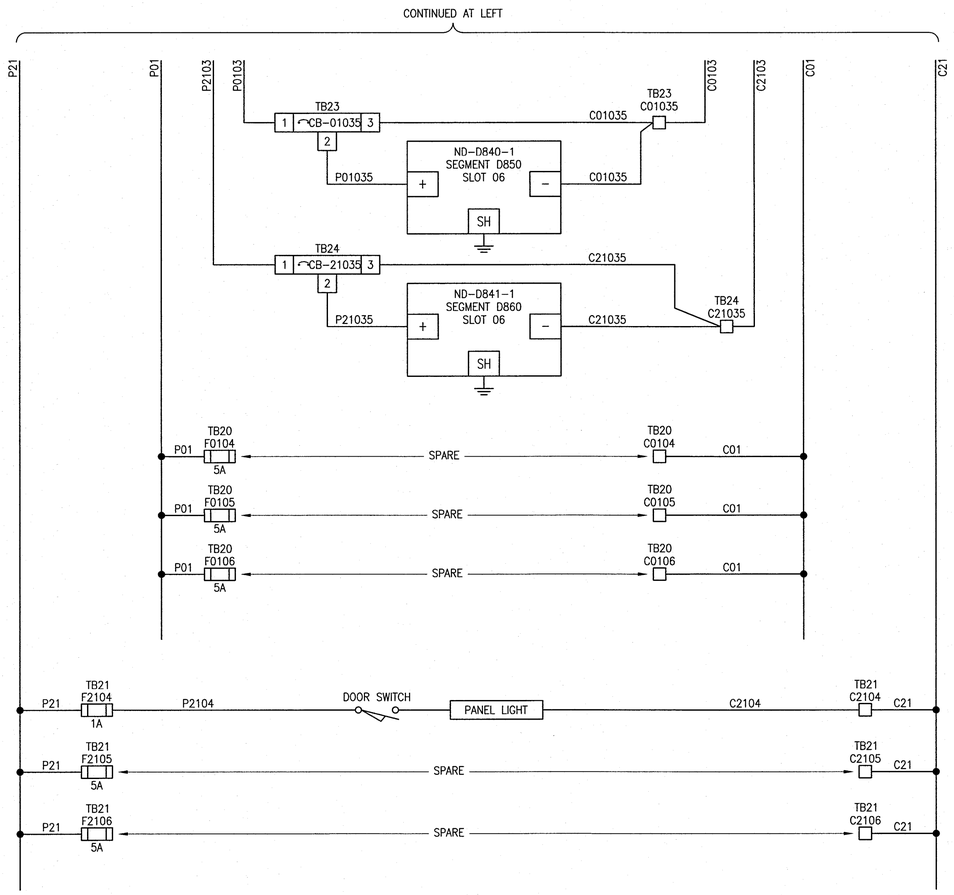

FUSE SCHEDULE

TB	IDENTIFIER	SIZE	RATING
TB20	F0101	5x20mm	5A TD
	F0102	5x20mm	1A FA
	F0103	5x20mm	5A FA
	F0104	5x20mm	5A FA
	F0105	5x20mm	5A FA
	F0106	5x20mm	5A FA
TB21	F2101	5x20mm	5A TD
	F2102	5x20mm	1A FA
	F2103	5x20mm	5A FA
	F2104	5x20mm	1A FA
	F2105	5x20mm	5A FA
	F2106	5x20mm	5A FA

NOTES
FA = FAST ACTING
TD = TIME DELAY

TERMINAL LAYOUT TB20

F0101
C0101
F0102
C0102
F0103
C0103
F0104
C0104
F0105
C0105
F0106
C0106

TERMINAL LAYOUT TB21

F2101
C2101
F2102
C2102
F2103
C2103
F2104
C2104
F2105
C2105
F2106
C2106

ELECTRONIC CIRCUIT PROTECTION SCHEDULE

TB	IDENTIFIER	SIZE	RATING
TB23	CB-01031	12.5x80mm	1A CLASS 2
	CB-01032	12.5x80mm	1A CLASS 2
	CB-01033	12.5x80mm	2A CLASS 2
	CB-01034	12.5x80mm	2A CLASS 2
	CB-01035	12.5x80mm	1A CLASS 2
TB24	CB-21031	12.5x80mm	1A CLASS 2
	CB-21032	12.5x80mm	1A CLASS 2
	CB-21033	12.5x80mm	2A CLASS 2
	CB-21034	12.5x80mm	2A CLASS 2
	CB-21035	12.5x80mm	1A CLASS 2

TERMINAL LAYOUT TB23

CB-01031
CB-01032
CB-01033
CB-01034
CB-01035
C01031
C01032
C01033
C01034
C01035

TERMINAL LAYOUT TB24

CB-21031
CB-21032
CB-21033
CB-21034
CB-21035
C21031
C21032
C21033
C21034
C21035

CP-D820 POWER CONSUMPTION SCHEDULE AT 24 VDC

LOAD	RM01 CURRENT (mA)	RM02 CURRENT (mA)	NOTES
PLC-D800-A	1650	–	1
PLC-D800-B	–	1650	1
NGW-D940	200	–	2
NGW-D941	–	200	2
NSW-D930	417	417	2
NSW-D931	417	417	2
ND-D840-1 RACK	800	800	2
ND-D840-1 SEGMENT D850	108	–	2
ND-D841-1 RACK	800	800	2
ND-D841-1 SEGMENT D860	–	40	2
LED24V15	–	500	2
TOTAL	4392	4824	

NOTES
1. BASED ON 55W OF POWER CONSUMPTION.
2. BASED ON DATA SHEET.

LEGEND:

EQUIPMENT GROUND

APEGM Certificate of Authorization
SNC-Lavalin Inc.
No. 4489

NO.	REVISIONS	DATE	DESIGN	CHECK
00	ISSUED FOR CONSTRUCTION – 976-2016	2017/04/05	MW	PC

CH2MHILL. SNC·LAVALIN KGS GROUP

DESIGNED BY: M. WANG	CHECKED BY: P. CHICATUN
DRAWN BY: B. DE GUZMAN	APPROVED BY: E. RYCZKOWSKI
SCALE: NTS	ISSUED FOR CONSTRUCTION BY: J. SHUMKA
DATE: 2016/08/17	DATE: 2017/04/05
CONSULTANT NO.: 474248	

ENGINEER'S SEAL
PROVINCE OF MANITOBA
CHICATUN Member 30307
REGISTERED PROFESSIONAL ENGINEER
APR 4/2017

Winnipeg
THE CITY OF WINNIPEG
WATER AND WASTE DEPARTMENT

SOUTH END WATER POLLUTION CONTROL CENTRE
SEWPCC UPGRADING/EXPANSION PROJECT
AUTOMATION – POWER DISTRIBUTION SCHEMATIC
FERMENTERS/THICKENERS/BIOFILTERS
CP-D820 PLC AND DEVICE NETWORK EQUIPMENT CABINET

CITY DRAWING NUMBER	SHEET	REV.	SIZE
1-0102-ACBD-D004	001	00	A1

PLOT DATE: Apr 01, 2017 – 10:11am
FILE NAME:1-0102-ACBD-D004.dwg

LAST SAVE: 2017/04/01 – 10:11am
PATH: C:\pw_workdir\ch2mhill_wbg\sh043264\d0356273\1-0102-ACBD-D004.dwg