A1 SIZE – 594mm x 841mm

| FUSE SCHEDULE | | | |
|---|---|---|---|
| TB | IDENTIFIER | SIZE | RATING |
| TB11 | F11 | 6.3x32mm | 10A TD |
| | F12 | 6.3x32mm | 1A FA |
| TB12 (UPS) | F21 | 6.3x32mm | 10A TD |
| | F22 | 6.3x32mm | 2.25A TD |
| | F23 | 6.3x32mm | 1A FA |
| | F24 | 6.3x32mm | 1A FA |
| TB21 | F01 | 6.3x32mm | 10A TD |
| | F02 | 6.3x32mm | 10A TD |
| | F03 | 6.3x32mm | 10A TD |
| | F04 | 6.3x32mm | 5A TD |
| | F05 | 6.3x32mm | 5A TD |
| | F06 | 6.3x32mm | 10A TD |
| | F07 | 6.3x32mm | 5A TD |
| | F08 | 6.3x20mm | 10A TD |
| | F09 | 6.3x20mm | 10A TD |

NOTES
FA = FAST ACTING
TD = TIME DELAY

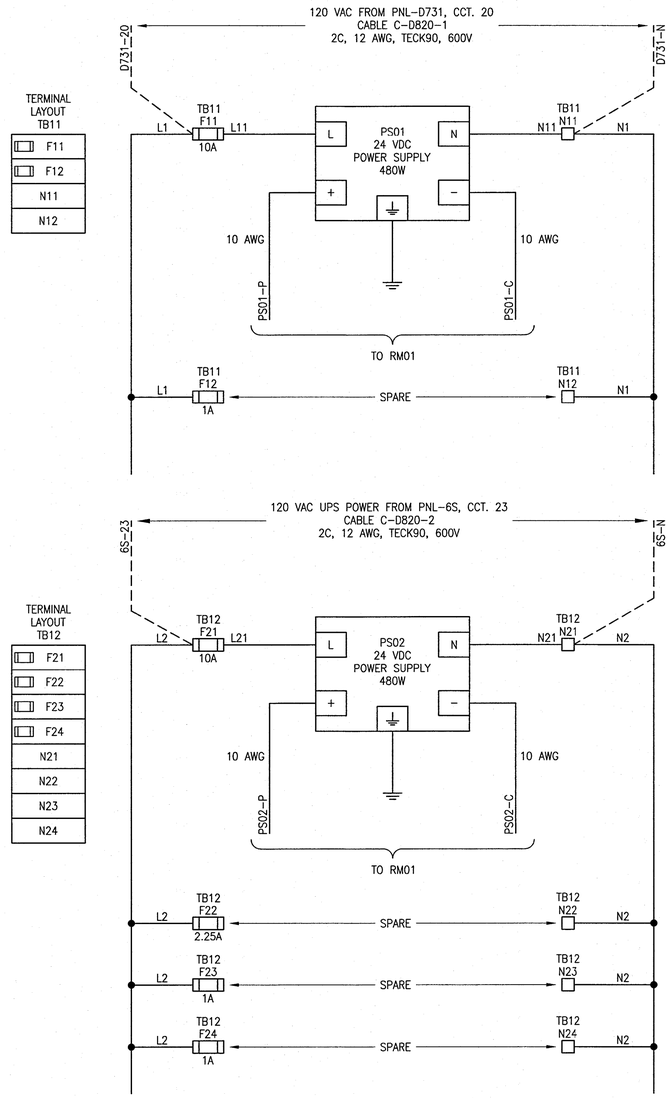


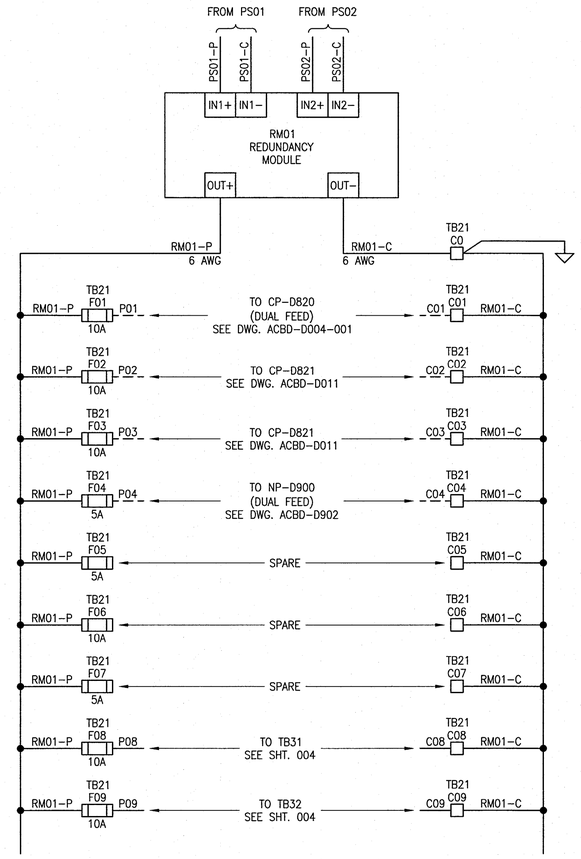


| RM01 POWER CONSUMPTION SCHEDULE AT 24 VDC | | |
|---|---|---|
| LOAD | CURRENT (mA) | NOTES |
| CP-D820 | 4392 | 2, 3 |
| NP-D900 | 1720 | 2, 3 |
| CP-D821 | 6340 | 1 |
| FIT-T2107 | 334 | 1 |
| FIT-T2307 | 334 | 1 |
| FIT-D3013 | 380 | 1 |
| FIT-D3051 | 380 | 1 |
| FIT-D4033 | 380 | 1 |
| FIT-D4153 | 380 | 1 |
| FIT-D4173 | 380 | 1 |
| FIT-D4305 | 380 | 1 |
| FIT-D4505 | 380 | 1 |
| FIT-D4605 | 380 | 1 |
| ADP-D831 | 1102 | 2 |
| ADP-D832 | 1214 | 2 |
| ADP-D833 | 753 | 2 |
| TOTAL | 19229 | |

NOTES
1. BASED ON DATA SHEET.
2. DUAL FEED, LOADS INCLUDED.
3. ESTIMATED.

LEGEND:
ISOLATED GROUND
EQUIPMENT GROUND

| REFERENCE DRAWINGS | DESCRIPTION |
|---|---|
| – | – |

APEGM Certificate of Authorization
SNC-Lavalin Inc.
No. 4489

| NO. | REVISIONS | DATE | DESIGN | CHECK |
|---|---|---|---|---|
| 00 | ISSUED FOR CONSTRUCTION – 976-2016 | 2017/04/05 | MW | PC |

CH2MHILL. SNC·LAVALIN KGS GROUP

| | |
|---|---|
| DESIGNED BY: M. WANG | CHECKED BY: P. CHICATUN |
| DRAWN BY: B. DE GUZMAN | APPROVED BY: E. RYCZKOWSKI |
| SCALE: NTS | ISSUED FOR CONSTRUCTION BY: J. SHUMKA |
| DATE: 2016/08/15 | DATE: 2017/04/05 |
| CONSULTANT NO.: 474248 | |

ENGINEER'S SEAL
PROVINCE OF MANITOBA
CHICATUN Member 30307
REGISTERED PROFESSIONAL ENGINEER
APR 4, 2017

THE CITY OF WINNIPEG
WATER AND WASTE DEPARTMENT

SOUTH END WATER POLLUTION CONTROL CENTRE
SEWPCC UPGRADING/EXPANSION PROJECT
AUTOMATION – POWER DISTRIBUTION SCHEMATIC
FERMENTERS/THICKENERS/BIOFILTERS
PSP-D820 POWER SUPPLY CABINET

| CITY DRAWING NUMBER | SHEET | REV. | SIZE |
|---|---|---|---|
| 1-0102-ACBD-D002 | 001 | 00 | A1 |

PLOT DATE: Apr 01, 2017 – 10:11am
FILE NAME:1-0102-ACBD-D002-001.dwg

LAST SAVE: 2017/04/01 – 10:11am
PATH: C:\pw_workdir\ch2mhill_wbg\sh043264\d0356273\1-0102-ACBD-D002-001.dwg