A1 SIZE – 594mm x 841mm

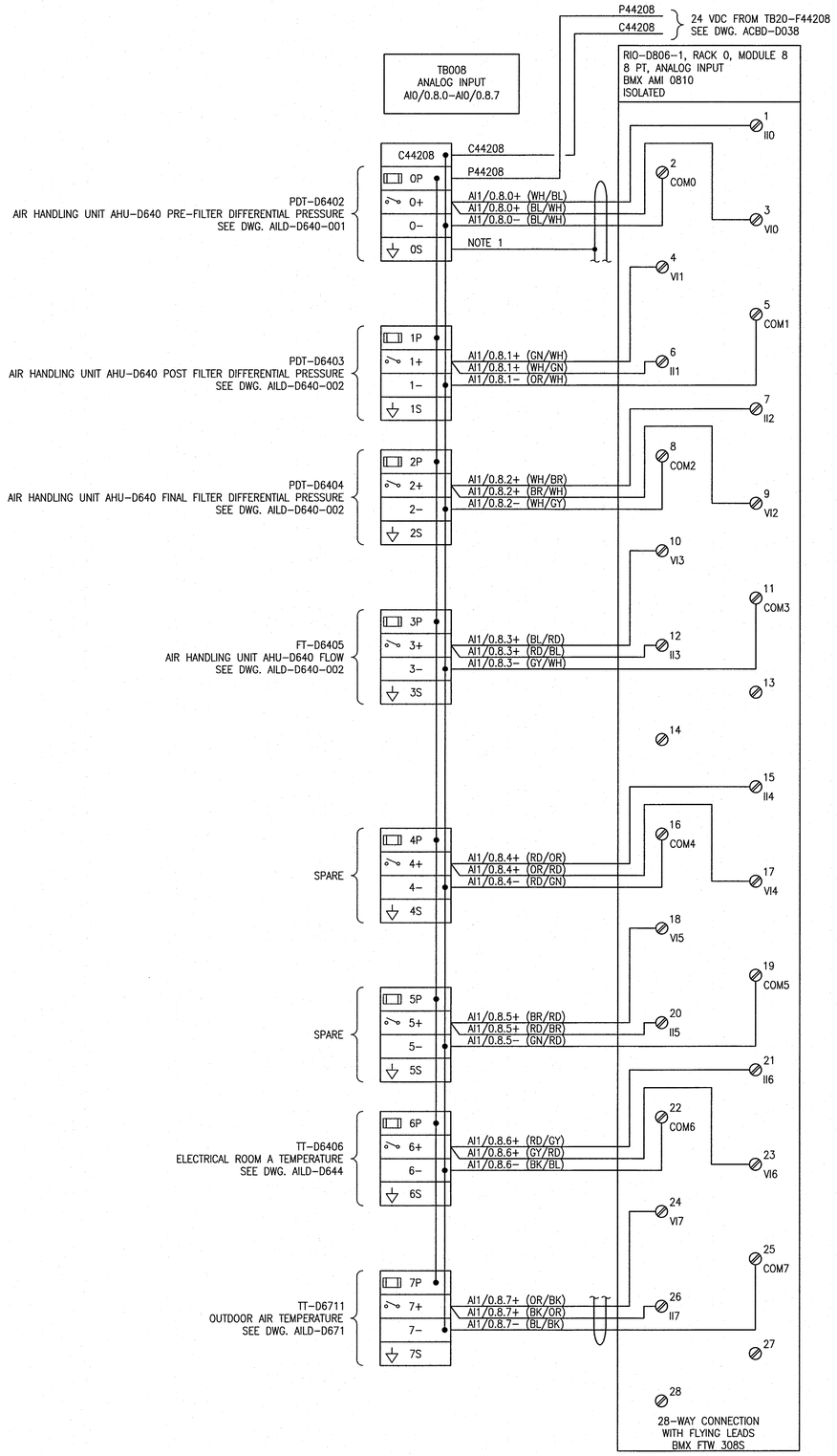

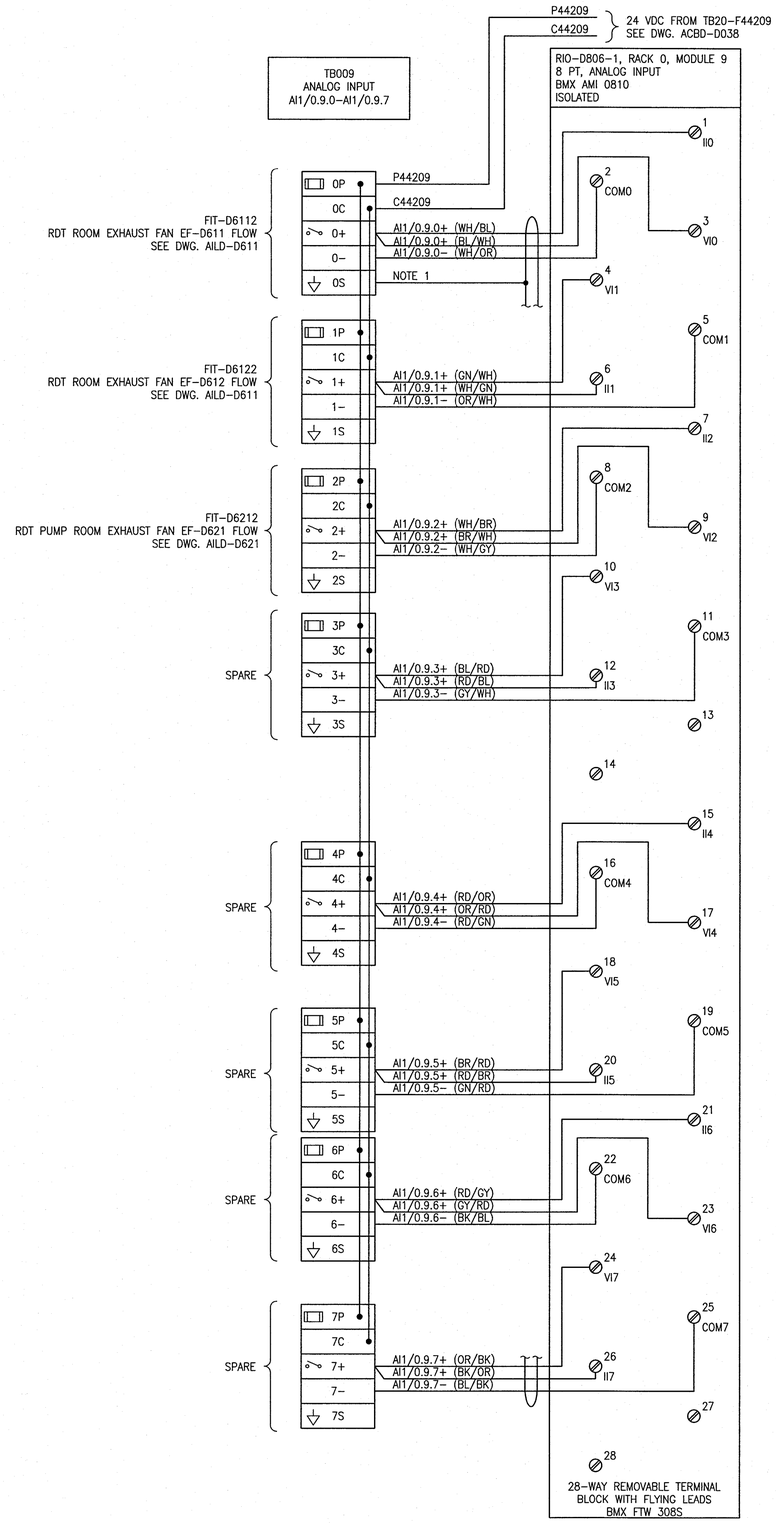

FUSE SCHEDULE

TB	IDENTIFIER	SIZE	RATED CURRENT (A) FA
TB008	0P	5x20mm	0.2
	1P	5x20mm	0.2
	2P	5x20mm	0.2
	3P	5x20mm	0.2
	4P	5x20mm	0.2
	5P	5x20mm	0.2
	6P	5x20mm	0.2
	7P	5x20mm	0.2
TB009	0P	5x20mm	1
	1P	5x20mm	1
	2P	5x20mm	1
	3P	5x20mm	1
	4P	5x20mm	1
	5P	5x20mm	1
	6P	5x20mm	1
	7P	5x20mm	1

NOTES:

1. CONNECT FLYNING LEADS CABLE OVERALL SHIELD TO TERMINAL OS.

LEGEND:

ISOLATED GROUND

REFERENCE DRAWINGS	DESCRIPTION
–	–

APEGM Certificate of Authorization
SNC-Lavalin Inc.
No. 4489

NO.	REVISIONS	DATE	DESIGN	CHECK
00	ISSUED FOR CONSTRUCTION – 976–2016	2017/04/05	MW	PC

CH2MHILL. SNC·LAVALIN KGS GROUP

DESIGNED BY: M. WANG	CHECKED BY: P. CHICATUN
DRAWN BY: M. WANG	APPROVED BY: E. RYCZKOWSKI
SCALE: NTS	ISSUED FOR CONSTRUCTION BY: J. SHUMKA
DATE: 2016/12/15	DATE: 2017/04/05
CONSULTANT NO.: 474248	

ENGINEER'S SEAL
PROVINCE OF MANITOBA
CHICATUN
Member
30307
REGISTERED PROFESSIONAL ENGINEER
Apr. 11 2017
REVOD

THE CITY OF WINNIPEG
WATER AND WASTE DEPARTMENT

SOUTH END WATER POLLUTION CONTROL CENTRE
SEWPCC UPGRADING/EXPANSION PROJECT
AUTOMATION – WIRING DIAGRAM
FERMENTERS/THICKENERS/BIOFILTERS
CP–D827, RIO–D806–1 – ANALOG INPUTS

CITY DRAWING NUMBER	SHEET	REV.	SIZE
1–0102–ACBD–D041	002	00	A1

LAST SAVE: 2017/04/01 – 10:14am
PATH: C:\pw_workdir\ch2mhill_wbg\sh043264\d0356273\1–0102–ACBD–D041–002.dwg

PLOT DATE: Apr 01, 2017 – 10:14am

FILE NAME:1–0102–ACBD–D041–002.dwg