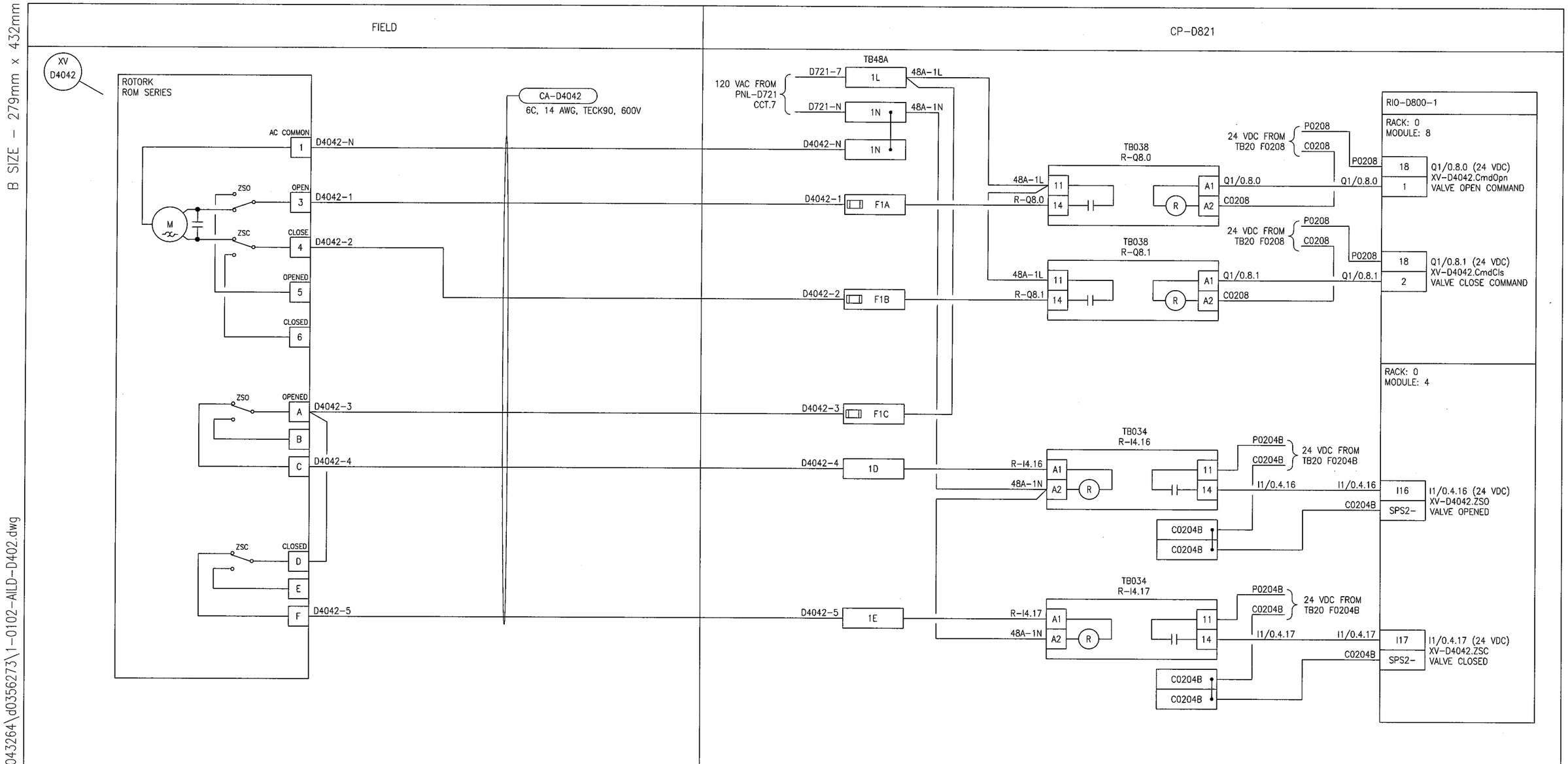


B SIZE - 279mm x 432mm

LAST SAVE: 2017/04/01 - 9:55am
PATH: C:\pw_workdir\ch2mhill_wbg\sh043264\d0356273\1-0102-AILD-D402.dwg

SNC·LAVALIN CH2MHILL KGS GROUP CONSULTING ENGINEERS

| NO. | REVISIONS | DATE | DESIGN | CHECK |
|---|---|---|---|---|
| 00 | ISSUED FOR CONSTRUCTION - 976-2016 | 2017/04/05 | SSB | TMC |

DESIGNED BY: S. BOGHOSIAN
CHECKED BY: T. CHURCH
DRAWN BY: G. WILLIAMSON
APPROVED BY: E. RYCZKOWSKI
SCALE: NTS
DATE: 2016/09/07
ISSUED FOR CONSTRUCTION
BY: J. SHUMKA
DATE: 2017/04/05
CONSULTANT NO.: 474248

APEGM Certificate of Authorization
SNC-Lavalin Inc.
No. 4489

ENGINEER'S SEAL
PROVINCE OF MANITOBA
T. M. CHURCH
Member 32682
REGISTERED PROFESSIONAL ENGINEER
Apr. 4, 2017

Winnipeg
THE CITY OF WINNIPEG
WATER AND WASTE DEPARTMENT

SOUTH END WATER POLLUTION CONTROL CENTRE
SEWPCC UPGRADING/EXPANSION PROJECT
AUTOMATION - LOOP DIAGRAM
XV-D4042
FLUSHING WATER VALVE

| CITY DRAWING NUMBER | SHEET | REV. | SIZE |
|---|---|---|---|
| 1-0102-AILD-D402 | 001 | 00 | B |

PLOT DATE: Apr 01, 2017 - 9:55am
FILE NAME: 1-0102-AILD-D402.dwg