B SIZE - 279mm x 432mm

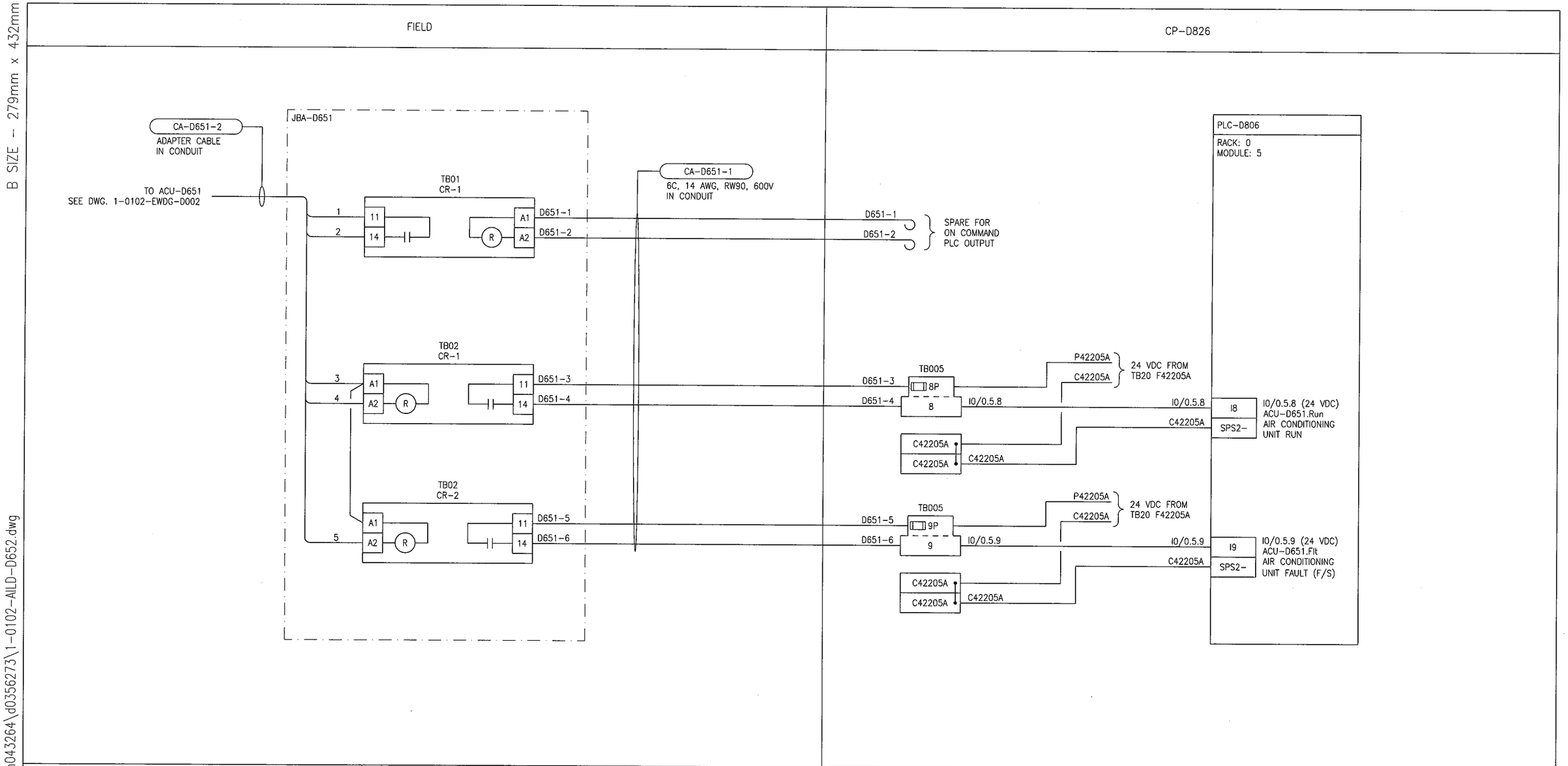

NO.	REVISIONS	DATE	DESIGN	CHECK
00	ISSUED FOR CONSTRUCTION - 976-2016	2017/04/05	SSB	TMC

APEGM Certificate of Authorization
SNC-Lavalin Inc.
No. 4489

SNC·LAVALIN CH2MHILL KGS GROUP CONSULTING ENGINEERS

DESIGNED BY: S. BOGHOSIAN	CHECKED BY: T. CHURCH
DRAWN BY: J. GRAGASIN	APPROVED BY: E. RYCZKOWSKI
SCALE: NTS	DATE: 2016/12/14
ISSUED FOR CONSTRUCTION BY: J. SHUMKA	DATE: 2017/04/05
CONSULTANT NO.: 474248	

ENGINEER'S SEAL
PROVINCE OF MANITOBA
TOM CHURCH
Member
32682
REGISTERED PROFESSIONAL ENGINEER
Apr. 4, 2017

Winnipeg
THE CITY OF WINNIPEG
WATER AND WASTE DEPARTMENT

SOUTH END WATER POLLUTION CONTROL CENTRE
SEWPCC UPGRADING/EXPANSION PROJECT
AUTOMATION - LOOP DIAGRAM
ACU-D651
ELECTRICAL ROOM B AIR CONDITIONING UNIT

CITY DRAWING NUMBER	SHEET	REV.	SIZE
1-0102-AILD-D652	001	00	B

LAST SAVE: 2017/04/01 - 9:58am
PATH: C:\pw_workdir\ch2mhill_wbg\sh043264\d0356273\1-0102-AILD-D652.dwg

PLOT DATE: Apr 01, 2017 - 9:58am

FILE NAME: 1-0102-AILD-D652.dwg