A1 SIZE – 594mm x 841mm

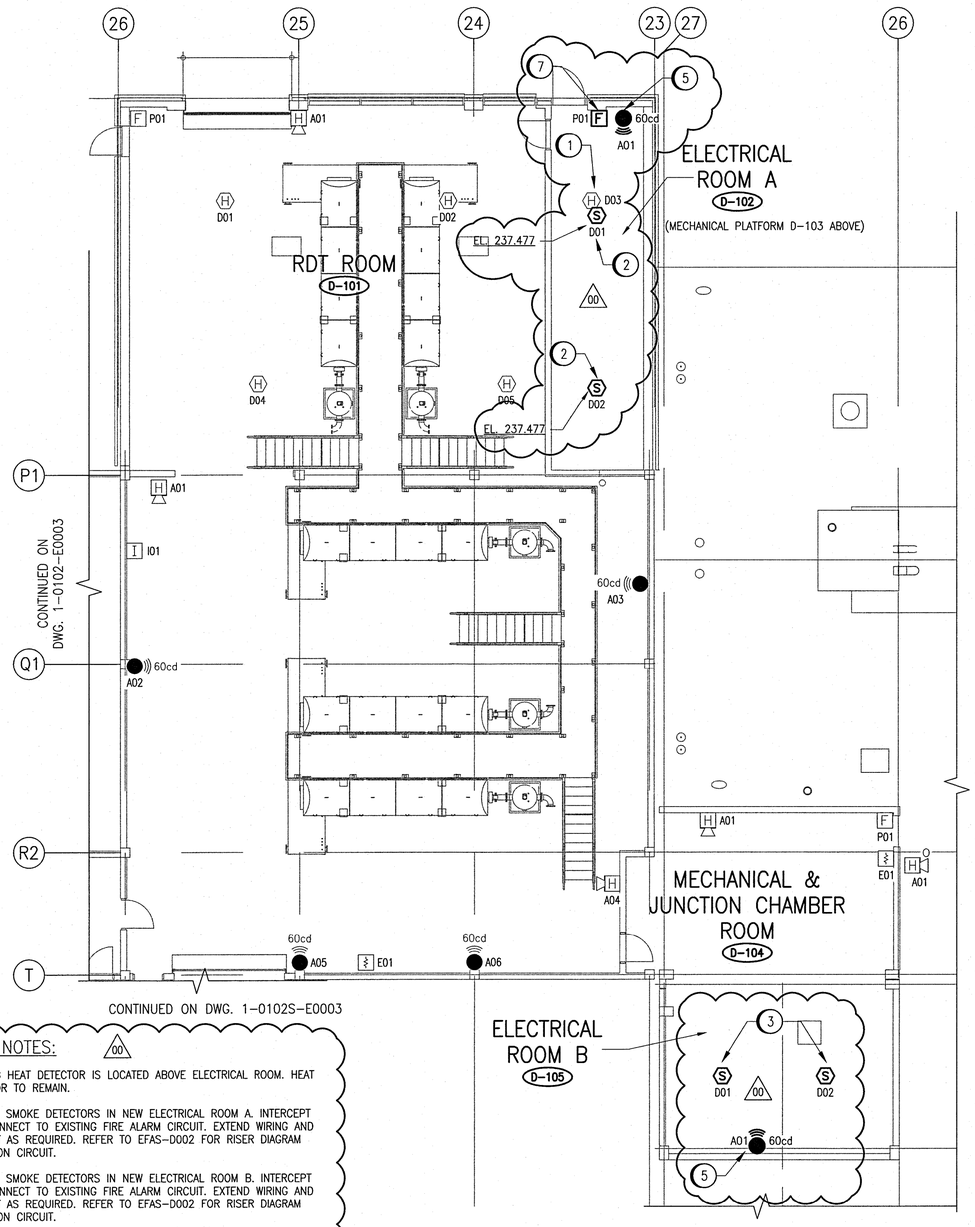

FERMENTERS/THICKENERS MAIN FLOOR

1 : 100

DESIGN INTENT NOTES

1. FAS-D-B02-D01 IS INTENDED TO ACTIVATE DOOR RELEASE FAS-S201-R01 IN THE EVENT OF A FIRE (SEE 1-0102S-E0006 FOR MORE DETAILS).

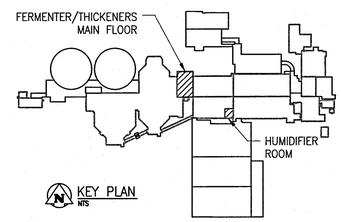

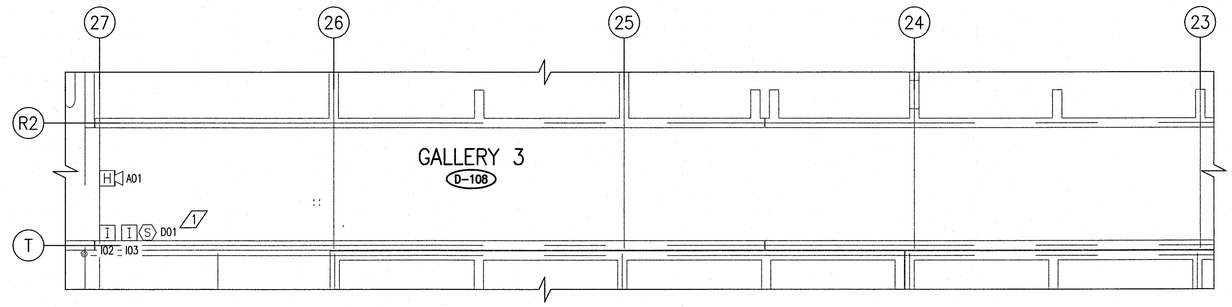

GENERAL NOTES:

1. EXISTING OXYGEN REACTOR FIRE ALARM SYSTEM TO BECOME FIRE ALARM SYSTEM OF PRIMARY FERMENTER/SLUDGE THICKENING AREA AND BIOFILTER AREA.
2. THIS DRAWING SUPERCEDES 1-0102R-E0002 AND E0003.
3. CLOUDED PORTIONS INDICATE NEW WORK / MODIFICATIONS TO EXISTING EQUIPMENT, EXCEPT AS NOTED. ALL CLOUDED PORTIONS ARE NEW AND ARE TO BE PROVIDED BY THE CONTRACTOR.
4. ALL WIRING ASSOCIATED WITH FIRE ALARM EQUIPMENT SHALL BE RUN IN CONDUIT.
5. ALL CONDUIT SHALL BE RIGID, THREADED ALUMINUM CONDUIT, EXCEPT FOR CONDUIT RUNS WITHIN THE ELECTRICAL ROOMS, WHICH CAN BE EMT. THE ELECTRICAL ROOM IS NON-HAZARDOUS, NON-CORROSIVE.
6. PROVIDE EXPANSION COUPLINGS AND FITTINGS FOR ALL CONDUIT CROSSING EXPANSION JOINTS.
7. UTILIZE A MINIMUM OF #12 AWG WIRE SIZE FOR NOTIFICATION APPLIANCE CIRCUITS (NAC).
8. ALL WIRE CONNECTION SHALL BE MADE VIA TERMINAL BLOCKS (MARRETTES ARE NOT ALLOWED).
9. DEVICE TAGS ARE SHOWN IN SHORTHAND NOTATION. FULL DEVICE TAG FORMAT IS FAS-w-xxx-yyy, WHERE w IS THE AREA DESIGNATION, xxx IS THE ROOM NUMBER, AND yyy IS THE DEVICE IDENTIFIER.
10. HUMIDIFIER ROOM IN BIOFILTER AREA IS CLASSIFIED AS CLASS I, ZONE 2. ALL EQUIPMENT SHALL BE HAZARDOUS RATED.
11. ALL REQUIRED HAZARDOUS CONDUIT SEALS ARE NOT SHOWN. INSTALL AS PER CEC REQUIREMENTS.

SPECIFIC NOTES:

1. EXISTING HEAT DETECTOR IS LOCATED ABOVE ELECTRICAL ROOM. HEAT DETECTOR TO REMAIN.
2. PROVIDE SMOKE DETECTORS IN NEW ELECTRICAL ROOM A. INTERCEPT AND CONNECT TO EXISTING FIRE ALARM CIRCUIT. EXTEND WIRING AND CONDUIT AS REQUIRED. REFER TO EFAS-D002 FOR RISER DIAGRAM DETECTION CIRCUIT.
3. PROVIDE SMOKE DETECTORS IN NEW ELECTRICAL ROOM B. INTERCEPT AND CONNECT TO EXISTING FIRE ALARM CIRCUIT. EXTEND WIRING AND CONDUIT AS REQUIRED. REFER TO EFAS-D002 FOR RISER DIAGRAM DETECTION CIRCUIT.
4. PROVIDE HAZARDOUS RATED SMOKE DETECTORS IN NEW BIOFILTER HUMIDIFIER ROOM. INTERCEPT AND CONNECT TO EXISTING FIRE ALARM CIRCUIT. EXTEND WIRING AND CONDUIT AS REQUIRED. REFER TO EFAS-D002 FOR RISER DIAGRAM DETECTION CIRCUIT.
5. PROVIDE STROBE. INTERCEPT AND CONNECT TO EXISTING FIRE ALARM CIRCUIT. EXTEND WIRING AND CONDUIT AS REQUIRED. REFER TO EFAS-D002 FOR RISER DIAGRAM NOTIFICATION CIRCUIT.
6. PROVIDE HAZARDOUS RATED HORN/STROBE COMBINATION UNIT. INTERCEPT AND CONNECT TO EXISTING FIRE ALARM CIRCUIT. EXTEND WIRING AND CONDUIT AS REQUIRED. REFER TO EFAS-D002 FOR RISER DIAGRAM NOTIFICATION CIRCUIT
7. PROVIDE MANUAL PULL STATION IN ELECTRICAL ROOM. INTERCEPT AND CONNECT TO EXISTING FIRE ALARM CIRCUIT. EXTEND WIRING AND CONDUIT AS REQUIRED. REFER TO EFAS-D002 FOR RISER DIAGRAM DETECTION CIRCUIT.

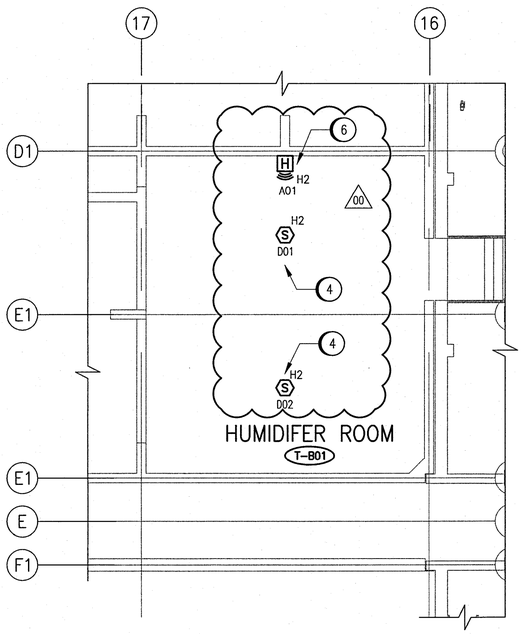

HUMIDIFIER ROOM

1 : 100

REFERENCE DRAWINGS	DESCRIPTION
1-0102-EHLC-T001	HAZARDOUS LOCATION, BIOFILTER, LOWER LEVEL PLAN
1-0102-EHLC-D002	HAZARDOUS LOCATION, FERMENTERS/THICKENERS, GROUND LEVEL/ROOF PLAN
1-0102-EHLC-D001	HAZARDOUS LOCATION, FERMENTERS/THICKENERS, LOWER LEVEL PLAN
1-0102-EFAS-D002	FIRE ALARM RISER DIAGRAM
1-0102-EFAS-A001	UPGRADE LEGEND & DETAILS

1:100 1000 0 2000 4000

APEGM Certificate of Authorization SNC-Lavalin Inc. No. 4489

NO.	REVISIONS	DATE	DESIGN	CHECK
00	ISSUED FOR CONSTRUCTION – 976-2016	2017/04/05	WE	DEB

CH2MHILL. KGS GROUP SNC·LAVALIN

DESIGNED BY: V. ELIMBAN	CHECKED BY: E. RYCZKOWSKI
DRAWN BY: MJ. PERSSON	APPROVED BY: D. BECKER
SCALE: 1:100	ISSUED FOR CONSTRUCTION BY: J. SHUMKA
DATE: 2016/06/15	DATE: 2017/04/05
CONSULTANT NO.: 474248	

ENGINEER'S SEAL: PROVINCE OF MANITOBA, D.E. BECKER, Member 23646, REGISTERED PROFESSIONAL ENGINEER, April 5/2017

THE CITY OF WINNIPEG
WATER AND WASTE DEPARTMENT

SOUTH END WATER POLLUTION CONTROL CENTRE
SEWPCC UPGRADING/EXPANSION PROJECT
ELECTRICAL – FIRE ALARM LAYOUT
FERMENTERS/THICKENERS AND BIOFILTER

CITY DRAWING NUMBER	SHEET	REV.	SIZE
1-0102-EFAS-D001	001	00	A1

LAST SAVE: 2017/03/30 – 3:29pm
PATH: C:\pw_workdir\ch2mhill_wbg\ve006717\d0356133\1-0102-EFAS-D001.dwg

PLOT DATE: Mar 30, 2017 – 3:29pm

FILE NAME: 1-0102-EFAS-D001.dwg