A1 SIZE – 594mm x 841mm

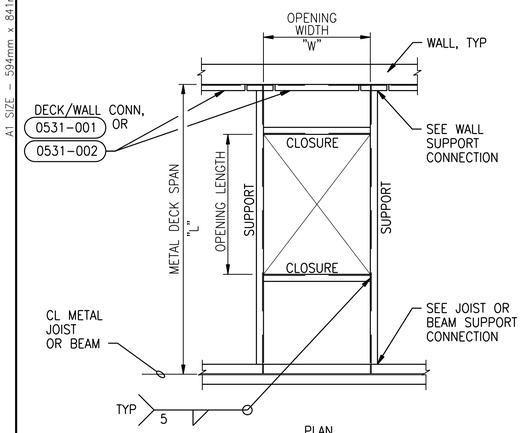

PLAN

OPENING	CLOSURE
600 < W ≤ 1200	L 75x75x6
1200 < W ≤ 1800	L 100x75x6 (LLV)
1800 < W	NA

DECK SPAN	SUPPORT
L ≤ 1800	L 100x75x6 (LLV)
1800 < L ≤ 2250	L 125x75x6 (LLV)
2250 < L	NA

OPENINGS 625mm TO 1800mm

NOTES:

1. ATTACH METAL DECKING TO ALL SUPPORTS PERPENDICULAR TO DECKING SPAN WITH SPECIFIED FASTENERS AT EACH VALLEY OF DECKING. ATTACH METAL DECKING TO SUPPORTS PARALLEL TO SPAN @ 150mm ON CENTER. WHERE VALLEY OF DECKING DOES NOT FALL AT SUPPORTS PARALLEL TO DECK SPAN, PROVIDE FILLER PIECES FOR EQUAL ATTACHMENTS.
2. REFER TO SPECIFICATIONS FOR SMALLER DECK OPENING REINFORCEMENT.

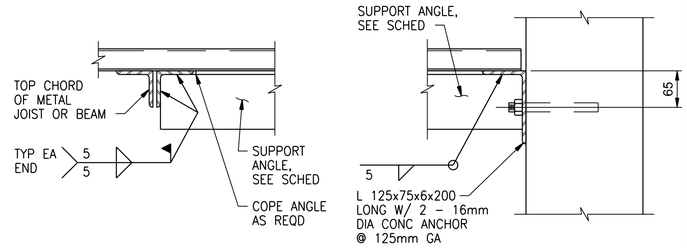

JOIST OR BEAM SUPPORT

WALL SUPPORT

FRAMING CONNECTIONS

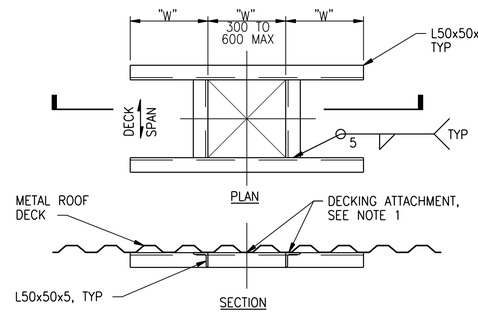

PLAN

SECTION

OPENINGS 300mm TO 600mm

ROOF DECK OPENING

NTS

0531-021

NOTES:

1. PROVIDE PROTECTION FOR DISSIMILAR METALS AND CONCRETE AS SPECIFIED.
2. AMERICAN STANDARD C310x31 STRINGERS TYPICAL EXCEPT WHERE OTHERWISE NOTED ON PLANS.
3. GALVANIZED STEEL GRATING TREADS UNLESS OTHERWISE NOTED ON PLANS.
4. STAIR HANDRAIL NOT SHOWN.
5. STAIR MANUFACTURER TO COORDINATE BOLTED TREADS AND HANDRAIL CONNECTIONS.
6. FIELD VERIFY DIMENSIONS AND ELEVATIONS PRIOR TO FABRICATION.
7. HOT DIP GALVANIZE ALL MEMBERS AND FASTENERS AFTER FABRICATION.
8. FOR RISER PLATE SEE PARTIAL RISER PLATE DETAIL (0551-041 DETAIL 2 OF 2) UNO. CLEARANCE BETWEEN TOP OF RISER PLATE AND BOTTOM OF TREAD TO BE 90mm MAX. FOR STAIRS WITH PICKET HANDRAIL EXTEND RISER PLATE PER FULL RISER PLATE DETAIL.

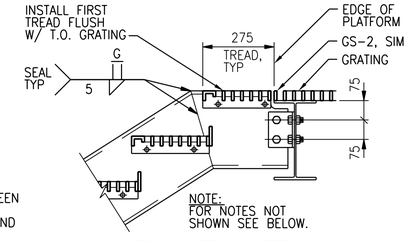

TOP CONNECTION – STEEL

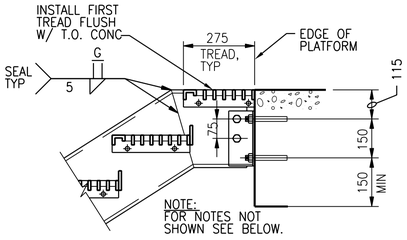

TOP CONNECTION – CONCRETE

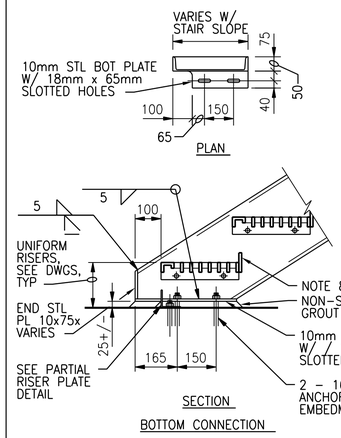

SECTION

BOTTOM CONNECTION

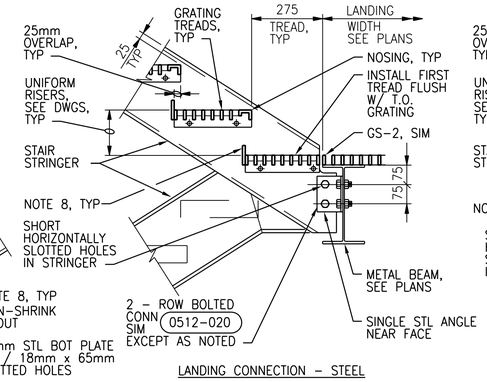

LANDING CONNECTION – STEEL

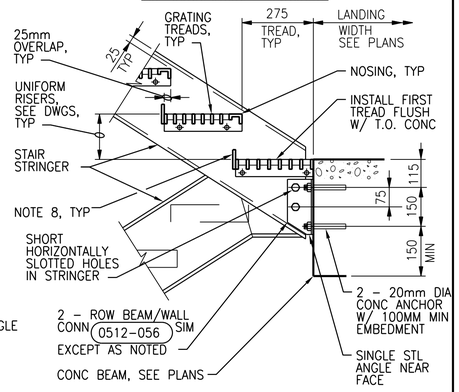

LANDING CONNECTION – CONCRETE

STAIR DETAILS – STEEL

NTS

0551-041

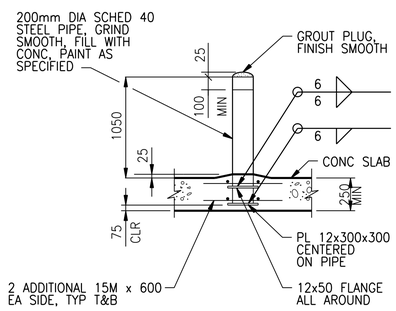

NOTE:

1. HOT DIPPED GALVANIZED AFTER FABRICATION.

GUARD POST – INTERIOR

NTS

0559-026

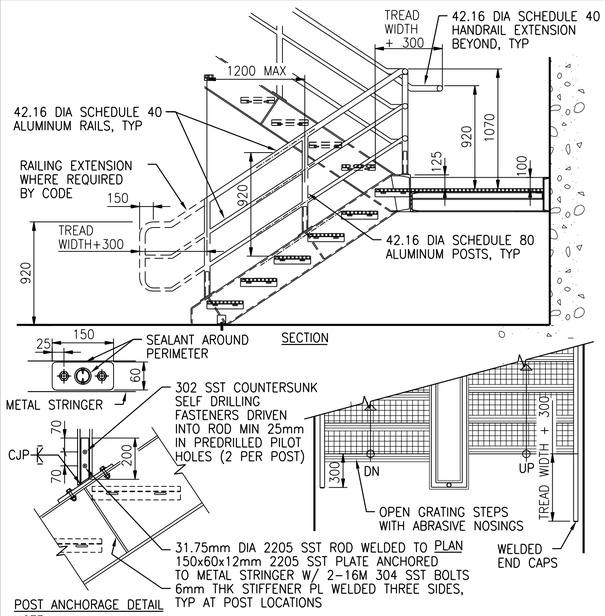

POST ANCHORAGE DETAIL

NOTE:

MINIMUM YIELD STRENGTH OF SST ROD AND PLATE TO BE 450 KPa. WELD ROD AND PLATE WITH A FILLER METAL OF MATCHING OR GREATER YIELD STRENGTH

POST ANCHORAGE – OPEN GRATING METAL STAIR WITH 3 RAIL TUBE RAILING

NTS

0552-805

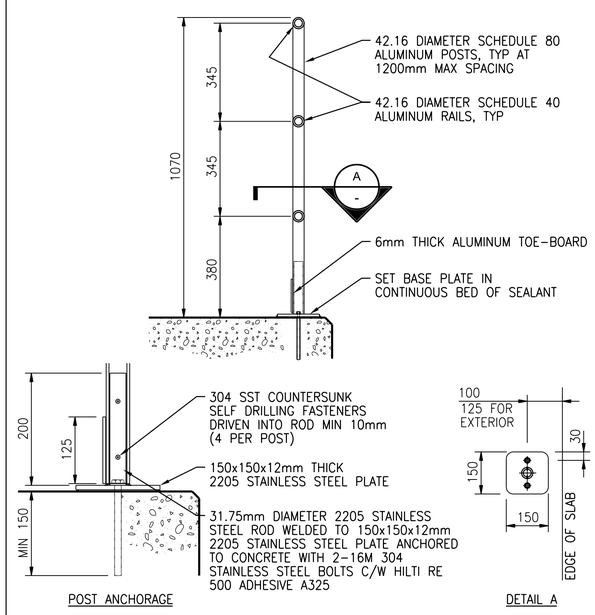

POST ANCHORAGE

DETAIL A

NOTE:

MINIMUM YIELD STRENGTH OF STAINLESS STEEL ROD AND PLATE TO BE 450 KPa. WELD ROD AND PLATE WITH A FILLER METAL OF MATCHING OR GREATER YIELD STRENGTH

POST ANCHORAGE – SURFACE MOUNTED 3 RAIL GUARD

NTS

0552-812

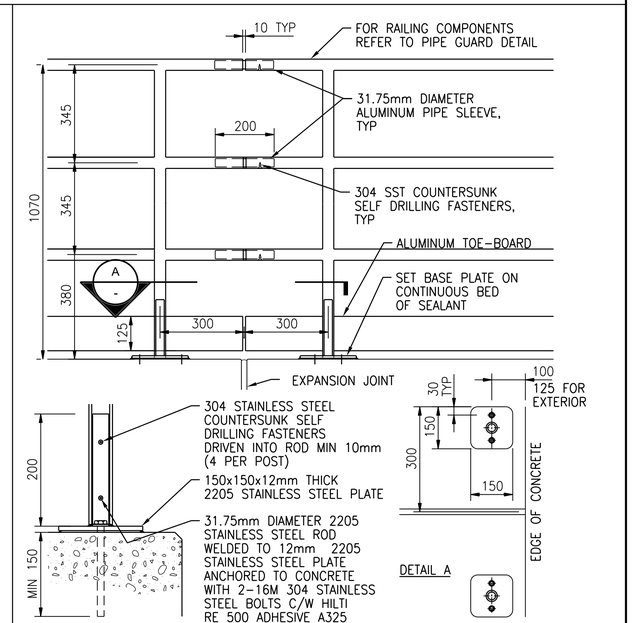

POST ANCHORAGE

NOTE:

MINIMUM YIELD STRENGTH OF STAINLESS STEEL ROD AND PLATE TO BE 450 KPa. WELD ROD AND PLATE WITH A FILLER METAL OF MATCHING OR GREATER YIELD STRENGTH.

POST ANCHORAGE – 3 RAIL PIPE RAILING EXPANSION JOINT (SURFACE MOUNTED)

NTS

0552-822

APEGM
Certificate of Authorization
CH2M HILL Canada Ltd.
No. 1441

NO.	REVISIONS	DATE	DESIGN	CHECK
02	ISSUED FOR CONSTRUCTION – 976-2016	2017/04/05	G.O.	J.C.
01	ISSUED FOR CONSTR – B.O. 899-2015	04/2016	G.O.	J.C.
00	ISSUED FOR TENDER – B.O. 899-2015	01/2015	G.O.	J.C.

PLOT DATE: 2017\03\29

CH2MHILL. SNC·LAVALIN KGS GROUP

DESIGNED BY: J. THANNICKAL
CHECKED BY: E. LUI
DRAWN BY: G. OMORI
APPROVED BY: H.T. FREIHAMMER
SCALE: NTS
ISSUED FOR CONSTRUCTION BY: J. SHUMKA
DATE: 2017/04/05
DATE: 2017/04/05
CONSULTANT NO.: 474248

ENGINEER'S SEAL
APR 5, 2017
PROVINCE OF MANITOBA
LUI
Member 37003
REGISTERED PROFESSIONAL ENGINEER

Winnipeg
THE CITY OF WINNIPEG
WATER AND WASTE DEPARTMENT

SOUTH END WATER POLLUTION CONTROL CENTRE
SEWPCC UPGRADING/EXPANSION PROJECT
STRUCTURAL
STANDARD DETAILS (16)

CITY DRAWING NUMBER	SHEET	REV.	SIZE
1-0102-SDTL-A017		02	A1

FILE NAME: 1-0102-SDTL-A017.dgn

©CH2M HILL 2017. ALL RIGHTS RESERVED.