A1 SIZE – 594mm x 841mm

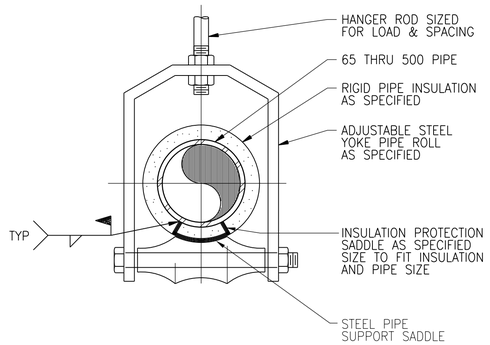

PIPE HANGER

NTS

4005-553

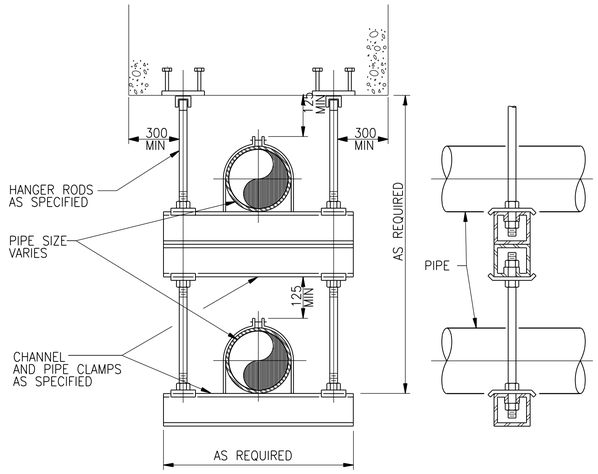

STACKED TRAPEZE PIPE HANGER

NTS

4005-555

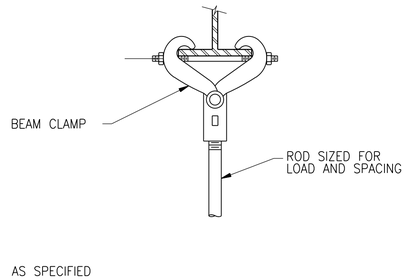

BEAM CLAMP

NTS

4005-556

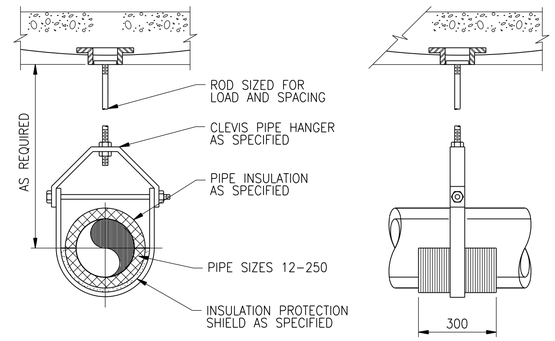

NOTES:

1. PIPE HANGERS SHALL BE OVERSIZED AS REQUIRED TO ACCOMMODATE THICKNESS OF INSULATION SPECIFIED. HANGER SHALL NOT COME INTO CONTACT WITH THE INSULATION DIRECTLY, EITHER AT THE VERTICAL YOKE OR AT THE POINT OF SUPPORT. FOR REQUIREMENTS ON INSULATION SHIELD USED WITH PIPE HANGERS, SEE SPECIFICATIONS.

PIPE HANGER

NTS

4005-557

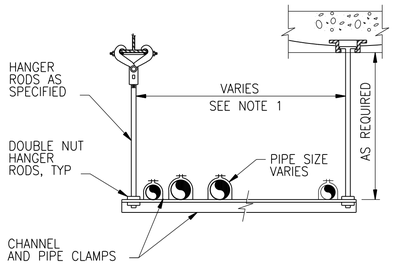

NOTES:

1. LENGTH VARIES WITH NUMBER OF PIPES TO BE SUPPORTED, AND SPACING BETWEEN PIPES.

TRAPEZE PIPE HANGER

NTS

4005-558

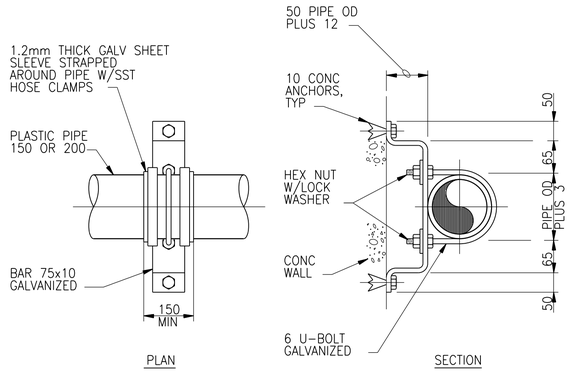

PIPE SUPPORT – WALL MOUNT

NTS

15506

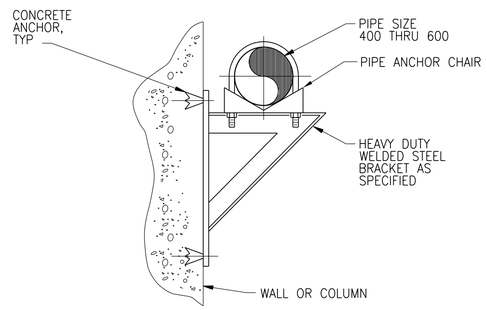

PIPE SUPPORT – WALL MOUNTED HEAVY

NTS

15510

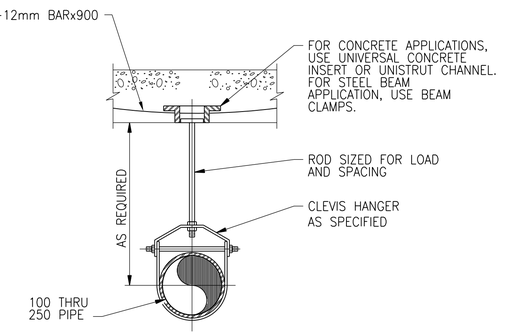

PIPE HANGER

NTS

15550

APEGM
Certificate of Authorization
CH2M HILL Canada Ltd.
No. 1441

NO.	REVISIONS	DATE	DESIGN	CHECK
00	ISSUED FOR CONSTRUCTION – 976-2016	2017/04/05	B.C.	J.C.

CH2MHILL. SNC·LAVALIN KGS GROUP

DESIGNED BY: F. ABSI
CHECKED BY: B. EDGAR
DRAWN BY: B. COOPER
APPROVED BY: H.T. FREIHAMMER
SCALE: NTS
ISSUED FOR CONSTRUCTION BY: J. SHUMKA
DATE: 2017/04/05
DATE: 2017/04/05
CONSULTANT NO.: 474248

ENGINEER'S SEAL
PROVINCE OF MANITOBA
April 5, 2017
F. J. ABSI
Member 36875
REGISTERED PROFESSIONAL ENGINEER
F. J. Absi

Winnipeg
THE CITY OF WINNIPEG
WATER AND WASTE DEPARTMENT

SOUTH END WATER POLLUTION CONTROL CENTRE
SEWPCC UPGRADING/EXPANSION PROJECT
PROCESS
STANDARD DETAILS (2)

CITY DRAWING NUMBER	SHEET	REV.	SIZE
1-0102-PDTL-A003	001	00	A1

PLOT DATE: 2017\03\29
FILE NAME: 1-0102-PDTL-A003.dgn

©CH2M HILL 2017. ALL RIGHTS RESERVED.