A1 SIZE – 594mm x 841mm

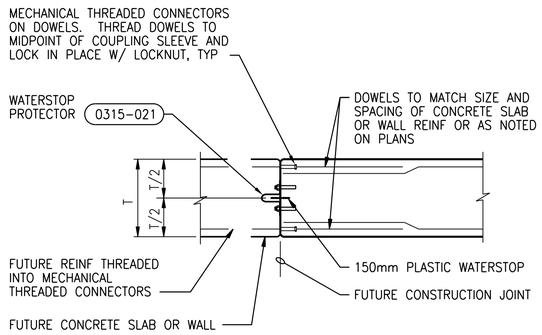

NOTES:

1. DETAILS SHOWN ARE APPLICABLE FOR FUTURE EXPANSION AT A CONSTRUCTION JOINT.
2. PROVIDE PROTECTIVE INSERTS FOR THREADED CONNECTORS.

WALL OR SLAB FUTURE CONSTRUCTION

NTS

0315-253

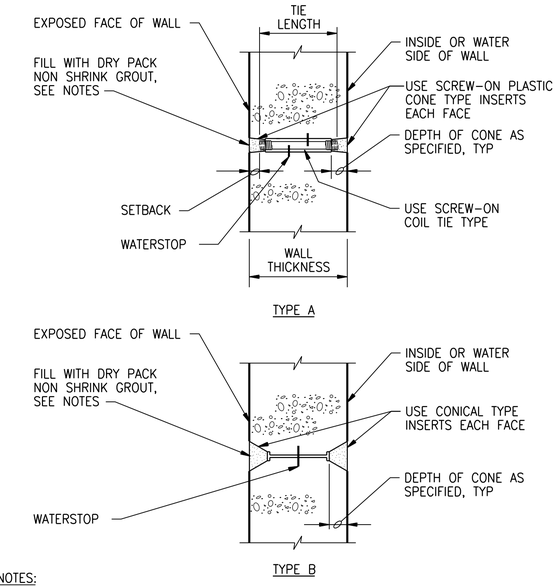

NOTES:

1. THE SPACING OF FORM TIES ON EXPOSED PORTIONS OF WALLS SHALL BE APPROXIMATELY EQUAL HORIZONTALLY AND VERTICALLY AND SHALL BE UNIFORM IN EACH DIRECTION.
2. DRY PACK METHOD SHALL BE AS SPECIFIED USING STEEL TOOLS.

FORM TIE HOLE

NTS

0310-801

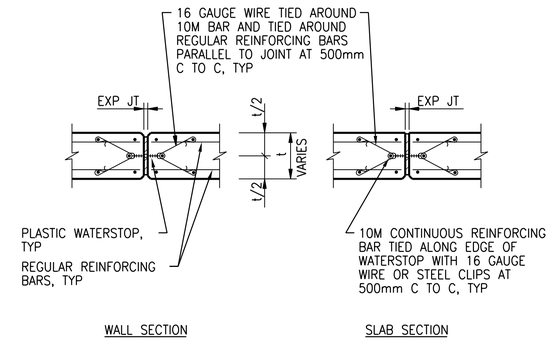

WATERSTOP ANCHORAGE

NTS

0315-801

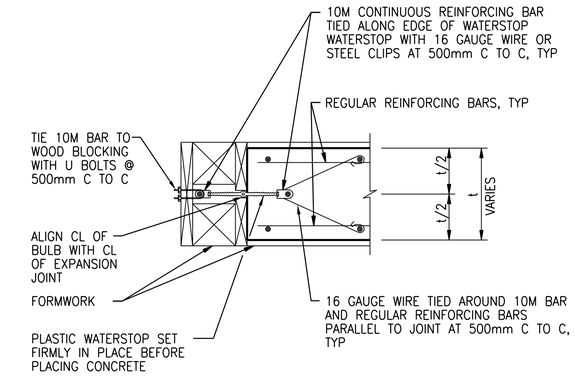

WATERSTOP ANCHORAGE FOR FIRST PLACEMENT

NTS

0315-802

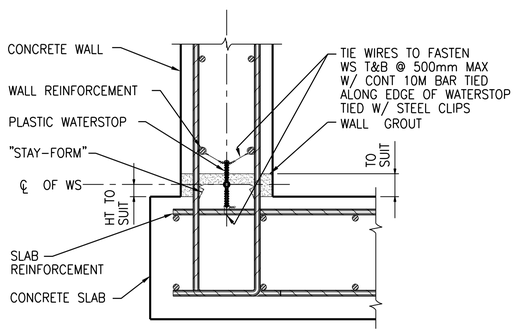

NOTES:

1. STARTER WALL REQUIRED FOR ALL CONSTRUCTION JOINTS WITH WATERSTOPS, UNLESS SPECIFICALLY NOTED OTHERWISE.
2. FOR WALLS WITH SINGLE MAT OF REINFORCING, LOCATE WATERSTOP ON LIQUID FACE, 25mm CLEAR OF REINFORCING.
3. SECURE WATERSTOP IN-PLACE AS SPECIFIED.
4. PROVIDE DEDICATED VIBRATOR TO CONSOLIDATE CONCRETE ON EITHER SIDE OF WATERSTOP.

WALL BASE CONSTRUCTION JOINT

NTS

0315-803

NOTES:

1. PROVIDE EXPANSION JOINTS WITH WATERSTOP FOR WALLS AND SLABS OF LIQUID RETAINING STRUCTURES, EXTERNAL WALLS AND SLABS IN CONTACT WITH SOIL.
2. PREFORMED JOINT FILLER (EXCEPT WHERE OTHERWISE INDICATED) TO BE:
   A) SELF EXPANDING CORK FOR EXPANSION JOINTS IN TANKS, CONDUITS, AND SUBSTRUCTURES.
   B) FOAMED PVC JOINT FILLER PR GRADE FOR EXPANSION JOINTS WITHOUT WATERSTOP IN DRY AREAS.
3. CLEAN OFF COATINGS AND DEBRIS FROM FACE OF CONCRETE AND ADHERE SELF-EXPANDING CORK TO FACE OF CONCRETE IMMEDIATELY PRIOR TO SUBSEQUENT CONCRETE PLACEMENT. KEEP CORK DRY BEFORE FINAL PLACEMENT.
4. WATERSTOP TO BE 230mm WIDE UNLESS OTHERWISE INDICATED.
5. FOR ANCHORAGE OF WATERSTOP SEE SEPARATE DETAILS.
6. FOR SEALANT SEE 0315-806.

EXPANSION JOINT NOTES

NTS

0315-804

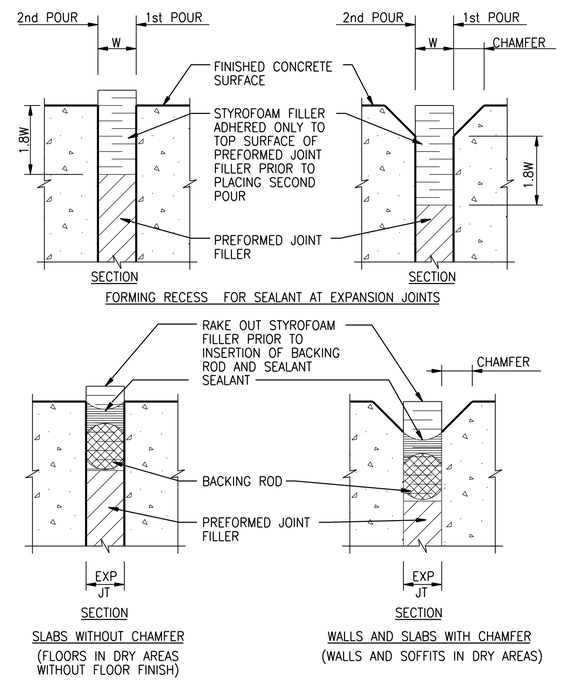

EXPANSION JOINT SEALANT

NTS

0315-806

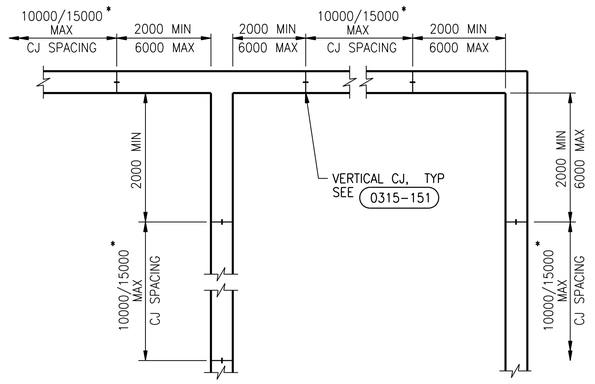

PLAN

* – 10000 FOR WALLS FORMING PART OF LIQUID HOLDING STRUCTURE. 15000 FOR ALL OTHER WALLS.

NOTES:

1. COORDINATE CONSTRUCTION JOINT LOCATIONS AND TIME BETWEEN CONCRETE POURS WITH SPECIFICATION.
2. LOCATE WALL CONSTRUCTION JOINTS AS SHOWN, UNLESS INDICATED OTHERWISE.

WALL CONSTRUCTION JOINT SPACING

NTS

0315-807

APEGM
Certificate of Authorization
CH2M HILL Canada Ltd.
No. 1441

NO.	REVISIONS	DATE	DESIGN	CHECK
02	ISSUED FOR CONSTRUCTION – 976-2016	2017/04/05	G.O.	J.C.
01	ISSUED FOR CONSTRUCTION	10/2015	G.O.	J.C.
00	ISSUED FOR TENDER	08/2015	G.O.	J.C.

CH2MHILL. SNC·LAVALIN KGS GROUP

DESIGNED BY: J. THANNICKAL
CHECKED BY: E. LUI
DRAWN BY: G.OMORI
APPROVED BY: H.T. FREIHAMMER
SCALE: NTS
ISSUED FOR CONSTRUCTION BY: J. SHUMKA
DATE: 2017/04/05
DATE: 2017/04/05
CONSULTANT NO.: 474248

ENGINEER'S SEAL
APR 5, 2017
PROVINCE OF MANITOBA
E.S.L. LUI
Member 37003
REGISTERED PROFESSIONAL ENGINEER

Winnipeg
THE CITY OF WINNIPEG
WATER AND WASTE DEPARTMENT

SOUTH END WATER POLLUTION CONTROL CENTRE
SEWPCC UPGRADING/EXPANSION PROJECT
STRUCTURAL
STANDARD DETAILS (2)

CITY DRAWING NUMBER	SHEET	REV.	SIZE
1-0102-SDTL-A003		02	A1

PLOT DATE: 2017\03\29
FILE NAME: 1-0102-SDTL-A003.dgn

©CH2M HILL 2017. ALL RIGHTS RESERVED.