A1 SIZE – 594mm x 841mm

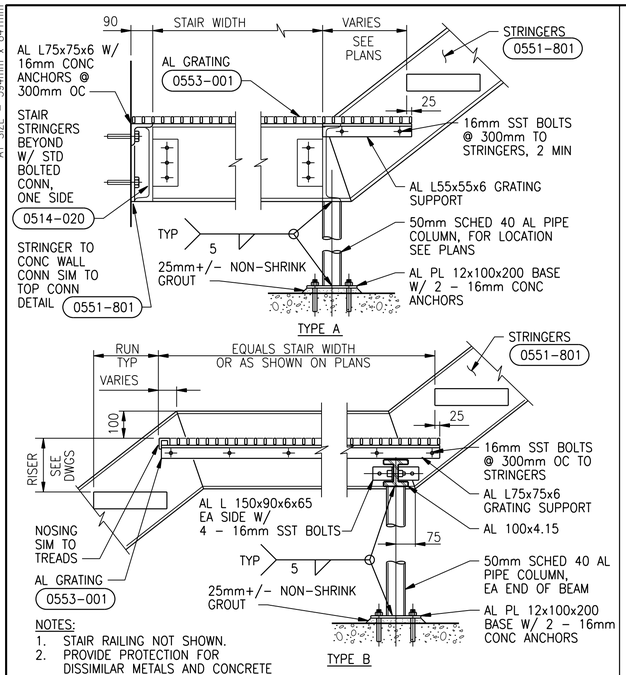

NOTES:
1. STAIR RAILING NOT SHOWN.
2. PROVIDE PROTECTION FOR DISSIMILAR METALS AND CONCRETE

STAIR LANDING WITH SUPPORTS – ALUMINUM

NTS

0551-002

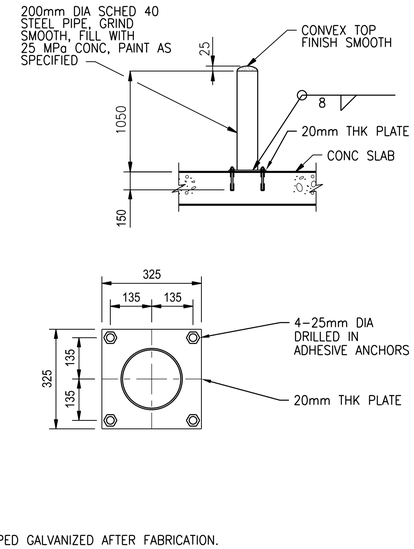

NOTE:
1. HOT DIPPED GALVANIZED AFTER FABRICATION.

GUARD POST – EXTERIOR

NTS

0559-027

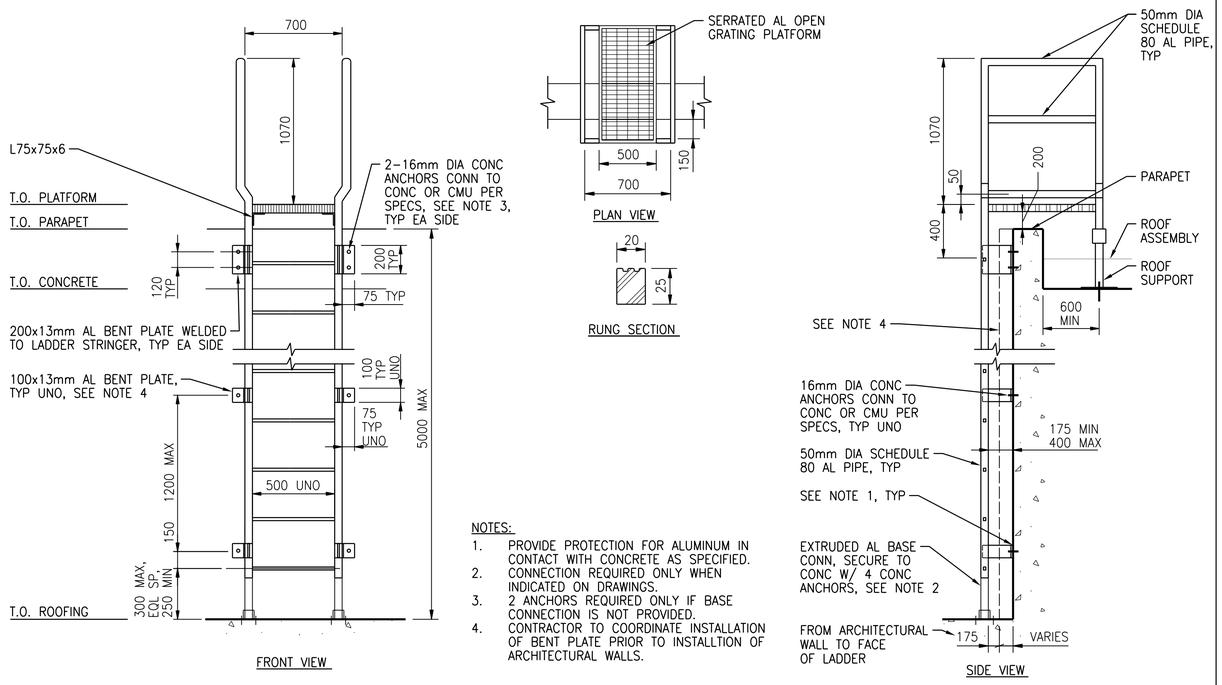

NOTES:
1. PROVIDE PROTECTION FOR ALUMINUM IN CONTACT WITH CONCRETE AS SPECIFIED.
2. CONNECTION REQUIRED ONLY WHEN INDICATED ON DRAWINGS.
3. 2 ANCHORS REQUIRED ONLY IF BASE CONNECTION IS NOT PROVIDED.
4. CONTRACTOR TO COORDINATE INSTALLATION OF BENT PLATE PRIOR TO INSTALLTION OF ARCHITECTURAL WALLS.

ALUMINUM LADDER (EXTERIOR WITH PARAPET)

NTS

0552-827

©CH2M HILL 2017. ALL RIGHTS RESERVED.

APEGM
Certificate of Authorization
CH2M HILL Canada Ltd.
No. 1441

NO.	REVISIONS	DATE	DESIGN	CHECK
00	ISSUED FOR CONSTRUCTION - 976-2016	2017/04/05	G.O.	J.C.

CH2MHILL. KGS GROUP SNC·LAVALIN

DESIGNED BY: J. THANNICKAL	CHECKED BY: E. LUI
DRAWN BY: G. OMORI	APPROVED BY: H.T. FREIHAMMER
SCALE: NTS	ISSUED FOR CONSTRUCTION BY: J. SHUMKA
DATE: 2017/04/05	DATE: 2017/04/05
CONSULTANT NO.: 474248	

ENGINEER'S SEAL
APR 5, 2017
PROVINCE OF MANITOBA
E. LUI
Member
37003
REGISTERED PROFESSIONAL ENGINEER

Winnipeg
THE CITY OF WINNIPEG
WATER AND WASTE DEPARTMENT

SOUTH END WATER POLLUTION CONTROL CENTRE
SEWPCC UPGRADING/EXPANSION PROJECT
STRUCTURAL
STANDARD DETAILS (17)

CITY DRAWING NUMBER	SHEET	REV.	SIZE
1-0102-SDTL-A018		00	A1

PLOT DATE: 2017\03\29
FILE NAME: 1-0102-SDTL-A018.dgn