SECTION 43 11 15.13

MULTISTAGE CENTRIFUGAL BLOWERS

EQUIPMENT AND COMPONENT NUMBERS

ID No.	Equipment Description
B-G351	Channel Aeration Blower
B-G352	Channel Aeration Blower

PART 1 GENERAL

1.1 REFERENCES

A. The following is a list of standards which may be referenced in this section:
   1. Acoustical Society of America (ASA): S1.4, American National Standard Specification for Sound Level Meters.
   2. American Bearing Manufacturers Association (ABMA).
   3. American Society of Mechanical Engineers (ASME):
      a. B16.1, Grey Iron Pipe Flanges and Flanged Fittings Classes 25, 125, and 250.
      b. B16.5, Pipe Flanges and Flanged Fittings NPS 1/2 Through NPS 24 Metric/Inch Standard.
      c. PTC 10, Performance Test Code on Compressors and Exhausters.
   4. American Society of Heating, Refrigerating, and Air-Conditioning Engineers (ASHRAE):
      a. 52.2, Method of Testing General Ventilation Air-Cleaning Devices for Removal Efficiency by Particle Size.
   5. American Society for Testing and Materials (ASTM):
      a. A36/A36M, Standard Specification for Carbon Structural Steel.
      b. A48/A48M, Standard Specification for Gray Iron Castings.
   6. Canadian Electrical Code (CEC).
   7. Electrical Equipment Manufacturers Advisory Council (EEMAC):
      a. M1-7 Motors and Generators.
   8. International Standards Organization (ISO):
      a. 10816-3, Mechanical Vibration - Evaluation of Machine Vibration by Measurements on Non-Rotating Parts; Part 3: Industrial Machines with Nominal Power Above 15 kW and Nominal Speeds Between 120 r/min and 15000 r/min When Measured in Situ.
   9. National Electrical Manufacturer's Association (NEMA):
      a. MG-1 Motors and Generators.
   10. Occupational Health and Safety Act (OHSA).
   11. 2010 National Building Code of Canada, with 2011 Manitoba Amendments (NBC).

1.2 DEFINITIONS

A. Shaft Power: Standard curve power required corrected for pressure and temperature at inlet conditions.

B. im^3/h: Volume of air in cubic meters per hour entering blower at specified inlet conditions.

C. sm^3/h: Volume of air in cubic meters per hour at standard conditions.

D. Standard Conditions: 20 degrees C, 101.3 kPa (absolute), and 36 percent relative humidity.

E. Discharge Pressure: Gauge pressure at blower discharge flange at rated capacity referenced to Job Site barometric pressure.

F. Overall Efficiency: Total combined efficiency of motor, drive, and blower (i.e., ratio of system input power to gas power assuming adiabatic compression process).

G. System Input Power: Total power input to vendor's local control panel.

1.3 SUBMITTALS

A. Shop Drawings:
   1. Make, model, weight, and horsepower of each equipment assembly.
   2. Manufacturer's catalog information, descriptive literature, dimensional layouts, specifications, and identification of materials of construction, for all items specified.
   3. Performance data including:
      a. Blower performance curves showing capacity vs. pressure, shaft power, and efficiency at 50, 60, 70, 80, 90, and 100 percent of rated speed, over entire operating range from shutoff to maximum capacity. Indicate separately pressure, shaft power, and efficiency at rated capacity. Indicate capacity above which blower should be operated to prevent surging.
      b. Show performance data at standard conditions and also at actual summer and winter design conditions corrected to Site elevation.
      c. Noise data.
      d. Furnish for each different size or type of equipment to be supplied.
   4. Detailed drawings showing the equipment fabrications and interface with other items. Include dimensions, size, and locations of connections to other work, and weights of associated equipment.
   5. External utility requirements such as air, water, power, drain, etc., for each component.
   6. All applicable submittals in Section 40 99 90, Package Control Systems.

B. Information Submittals:
   1. Manufacturer's Certificate of Compliance: Commercial products, including specific reference to meeting maximum noise level requirements, and painting/coating system(s).
   2. Test results, reports, and certifications.
   3. Special shipping, storage and protection, and handling instructions.
   4. Manufacturer's Certificate of Proper Installation in accordance with Section 01 43 33, Contractor Field Services.

5. Operation and Maintenance Data: As specified in Section 01 78 23, Operation and Maintenance Data.
6. Service records for maintenance performed during construction.
7. Submit written certification from Professional Engineer licensed in Province of Manitoba stating that support systems, anchorage, and equipment have been designed according to requirements of NBC for post-disaster structures, at time of Shop Drawing submittals.

1.4 EXTRA MATERIALS

A. Furnish, tag, and box, for each different blower size, the following spare parts and special tools for shipment and long-term storage:

Item	Quantity
Shaft coupling	One
Bearings	One complete set
Seals and gaskets	One complete set
Filters	Three
Any special tools required for routine maintenance	One complete set

B. Delivery: In accordance with Section 01 61 00, Common Product Requirements.

PART 2 PRODUCTS

2.1 GENERAL

A. Provide packaged blower system including, but not limited to, compressors, motors, shaft couplings, coupling guards, baseplates, vibration isolators, flexible connectors, control panels, instrumentation, spare parts, air filters, and miscellaneous appurtenances as necessary for a complete operating system.

B. Where possible, provide end products of one manufacturer in order to achieve standardization for appearance, operation, maintenance, replacement, and manufacturer's service.

C. Design equipment with due regard to safety of operation, accessibility, and durability of parts, and compliance with applicable OHSA, provincial, and local safety regulations.

D. Design equipment, anchorage, and support systems for vertical and lateral loading in accordance with NBC.

2.2 MANUFACTURERS

A. Materials, equipment, and accessories specified in this section shall be products of:
1. Gardner Denver/Hoffman & Lamson.
2. Atlas Copco/HSi.

3. Continental Blower.

2.3 CONDITIONS OF SERVICE

A. Site Conditions:
1. Elevation: 235 m.
2. Barometric Pressure: 98.5 kPa absolute.

B. Inlet Conditions (at blower inlet flange):

	Summer	**Winter**
Temperature (degrees C)	40	minus 35
Pressure (kPa absolute)	95.1	95.1
Relative Humidity (%)	90	10

2.4 PERFORMANCE REQUIREMENTS

A. Design rating for continuous duty at specified inlet conditions:

	B-G351, B-G352	
Service	Channel aeration	
Rated Capacity (sm^3/h)	3,400	
Inlet Pressure (kPag)	minus 3.4	
Rated Pressure Rise (kPa)	31.0	
Rated Discharge Pressure (kPag)	27.6	
Minimum Blower Efficiency at Rated Capacity (%)	60	
Maximum Shaft Power at Rated Capacity (kW)	53.1	
Surge Flow Rate at Rated Speed (sm^3/hr)	2,000 max.	
Minimum Pressure Rise to Surge at Rated Speed (kPa)	10	
Maximum Speed (rpm)	3,550	
Maximum Impeller Tip Speed (m/s)	120	
Drive Type	Direct coupled	
Drive Speed Control	VFD	

B. Maximum required shaft power at any point on blower performance curve shall not exceed 95 percent of motor rated (nameplate) power, excluding motor service factor, under all inlet conditions specified.

2.5 EQUIPMENT DESCRIPTION

A. Multistage centrifugal type with outboard mounted bearing construction, with impellers keyed to shaft supported by roller type bearings. Provide blowers with diaphragm cast integrally with casing.

B. Casing: Rated for maximum working pressure of not less than 172 kPa.

C. Inlet and Outlet Connections: ASME B16.1 Class 125 flanges, integrally cast as part of casing inlet and outlet heads. Furnish 6 mm NPT pressure indicator taps on inlet and outlet connections.

D. Impellers: Each impeller shall be statically and dynamically balanced. Dynamically balance complete rotating assembly. First critical speed of rotating assembly shall be at least 20 percent above maximum allowable operating speed.

E. Bearings: Antifriction type, oil lubricated, rated for ABMA L-10 life of 100,000 hours. Designed to be lubricated, inspected, or replaced without requiring disassembly of blower rotating element.

F. Shaft Seals: Labyrinth type to prevent leakage and assure non-contamination of bearing lubricant, located where blower shaft passes through inlet and outlet heads. Replaceable without having to disconnect inlet or discharge piping.

G. Shaft Coupling: Flexible spacer type, Rexnord Thomas XTSR71 Series or approved equal in accordance with B8, with coupling guard meeting OHSA requirements.

H. Baseplate: Mount blower and motor on common fabricated steel baseplate, flat and parallel to within plus or minus 2.5 mm. Provide resilient foundation mounting pads to meet vibration and seismic requirements.

I. Furnish constant level oilers for lubrication when machine is in operation.

J. Materials of Construction:
   1. Casing, Heads, and Bearing Housings: ASTM A48 Class 30 grey cast iron. Class 20 cast iron is not acceptable.
   2. Impellers: Cast aluminum No. 443 alloy.
   3. Shaft: ASTM A108 carbon steel.
   4. Baseplate: ASTM A36 structural steel plate and shapes.

2.6 FLEXIBLE CONNECTORS

A. Single arch, fabric and wire reinforced, flanged elastomer expansion joint, for each blower inlet and outlet connection.

B. Designed to mate with ASME B16.1 Class 125 flanges. Minimum working pressure range 100 kPag to 380 mm Hg vacuum, minimum 4 to 1 safety factor, and minimum working temperature rating of at least 120 degrees C.

C. Neutral Length: 200 mm face to face.

D. Stainless steel split retaining rings.

E. Control unit at discharge flexible connection, suitable for mating to blower outlet connection, to restrict axial pipe movement.

F. Manufacturer and Product:
   1. Metraflex; Style 100 HT.
   2. Or approved equal in accordance with B8.

2.7 INLET AIR FILTERS

A. Provide inlet air filter for each blower.

B. Filter Media:
   1. Disposable type panel filter.
   2. Sized for maximum airflow velocity of 2.54 m/s.
   3. Clean pressure drop not to exceed 12 mm W.C. at blower rated capacity.
   4. Minimum MERV rating of 7 in accordance with ASHRAE 52.2.

C. Filter Housing:
   1. Suitable for duct mounting.
   2. Fabricated from minimum 1.5 mm thick galvanized steel, all welded construction, braced and reinforced.
   3. Hinged access doors with neoprene gasket and latches.
   4. Suitable for up to 150 mm W.C. positive or negative operating pressure.

D. Manufacturer and Product:
   1. American Air Filter.
   2. Or approved equal in accordance with B8.

2.8 ELECTRICAL COMPONENTS AND ACCESSORIES

A. General: Provide all necessary electrical components and wiring for a complete, functional system. Electrical components shall be provided in accordance with requirements of Division 26, Electrical.

B. Wiring: All wiring shall meet requirements of Section 26 05 21, Wires and Cables (0-1000V) - Electrical, and CEC. All insulation shall be rated 600V, minimum. Twisted shielded pair cable shall be used for all low-voltage (24V dc) signals.

C. Electrical Raceways: All electrical wiring shall be installed in conduit meeting requirements of Section 26 05 34, Conduits, Conduit Fasteners, and Conduit Fittings. All raceways shall be installed in accordance with Section 26 05 34, Conduits, Conduit Fasteners, and Conduit Fittings, and CEC.

D. Motors: Provide squirrel-cage AC induction motors meeting requirements of Section 26 20 00, Low-Voltage AC Induction Motors, and as specified herein.

E. Electrical Responsibilities: Manufacturer/supplier shall be responsible for all electrical conduits, wiring, and electrical appurtenances located on equipment, including terminal junction boxes for power and control circuits.

F. Variable Frequency Drives: In accordance with Section 26 29 23, Variable Frequency Drives, supplied by equipment manufacturer and factory installed, connected, configured, and tested inside package control panels.

2.9 INSTRUMENTATION AND CONTROLS

A. General:
1. Provide all controls and control panels in accordance with requirements of Section 40 99 90, Package Control Systems.
2. Provide complete and functional system, including interfaces with plant Process Control System (PCS).
3. Provide variable frequency drives and full-voltage starters in package control panels for package system components. Motor starters shall be equipped with electronic overloads in all three phases. Overloads shall be resettable without opening panel.
4. Segregate analog wiring in dedicated raceways.
5. Control components shall operate on 120V ac power.
6. Provide all instrumentation in accordance with Section 40 99 90, Package Control Systems, unless specified otherwise. Provide industrial grade instruments suitable for intended service and environment.
7. Instrumentation and controls specified herein are minimum requirements. Equipment manufacturer shall provide additional components and features necessary to achieve intended function and provide safe and reliable operation of equipment supplied.

B. Control Panels:

Panel No.	Name	NEMA 250 Rating	Enclosure Material	Mounting
LCP-G351	Channel Aeration Blower B-G351 Control Panel	4	Steel	Free-standing
LCP-G352	Channel Aeration Blower B-G352 Control Panel	4	Steel	Free-standing

1. Main disconnect switch for 600V power supply, with lockable handle and interlocked with panel door.
2. Control power transformer.
3. Variable frequency drive.
4. Overload and over-current protection.
5. Programmable logic controller (PLC) for all blower functions.
6. Power Supply to Panels: Single 600V, 3-phase, 60 Hz supply to each panel. Power to all motors and instruments shall be supplied from associated panel.

7. Operator Controls and Indicators:
    a. Operator interface terminal (OIT).
    b. LOCAL/OFF/REMOTE selector switch.
    c. Blower START and STOP pushbuttons.
    d. Blower SPEED controls.
    e. EMERGENCY STOP pushbutton.
    f. System RESET pushbutton.
    g. REMOTE Mode indicating light.
    h. Blower ON indicating light.
    i. System FAULT indicating light.
    j. SURGE indicating light.
    k. Vibration HIGH indicating light.
    l. Suction pressure LOW indicating light.
    m. Discharge temperature HIGH indicating light.
    n. Filter differential pressure HIGH indicating light.
8. External Interfaces:
    a. Provide all required inputs and outputs for interfacing with blower motor and vendor-supplied instruments
    b. Plant PCS Interface:
        1) Provide clearly labeled terminals for interface to plant PCS, including but not limited to:
            a) Dry contact with less than 2 mA minimum switching current at 24 VDC for plant PCS discrete input signals:
                (1) “Remote Mode”.
                (2) “Blower Running”.
                (3) “System Ready”.
                (4) “System Fault”.
                (5) “Filter Differential Pressure High”.
            b) 24 VDC relay coil for plant PCS discrete output signals:
                (1) “Start” command.
                (2) “Stop” command.
        2) Provide Modbus TCP interface to plant PCS for monitoring all statuses, set-points, and alarms, including but not limited to:
            a) Blower drive VFD speed and status.
            b) Discharge pressure.
            c) High vibration fault.
            d) High discharge temperature fault.
            e) Low suction pressure fault.
            f) Surge indication.
            g) Discharge pressure set-point.
9. Functional Requirements:
    a. When LOCAL/OFF/REMOTE selector switch is in LOCAL position, blower start/stop and speed shall be manually controlled from LCP. In REMOTE position, blower shall be automatically controlled by LCP and plant PCS as follows:
        1) Duty and standby blower will be assigned at plant PCS. Plant PCS will issue “Start” command to duty blower.
        2) Upon receipt of “Start” command from plant PCS, blower shall start and run continuously.

3) Upon receipt of "Stop" command from plant PCS, blower shall stop immediately.
4) Blower speed shall be adjusted automatically by LCP to maintain constant discharge pressure based on analog input from discharge pressure transmitter. Discharge pressure set-point shall be adjustable at LCP.

b. "System Ready" indication shall signify blower is ready for normal operation and shall include following conditions:
1) LOCAL/OFF/REMOTE selector switch at LCP is in REMOTE position.
2) Absence of any "System Fault" condition.

c. Upon any of the following conditions, blower shall immediately stop and alarm shall be activated at LCP, in both LOCAL and REMOTE modes:
1) Motor overload.
2) Blower surge.
3) High vibration.
4) Low suction pressure.
5) High discharge temperature.

d. Provide timers and relays to override surge and low suction pressure during blower starting.

e. In event of "System Fault" (any abnormal condition that stops operation of blower), operation of blower shall be disabled until cause of fault is corrected and system RESET pushbutton at LCP is pressed.

f. When EMERGENCY STOP pushbutton is pressed, blower shall stop immediately in both LOCAL and REMOTE modes. Operation of blower shall be disabled until system RESET pushbutton is pressed.

g. In event of power supply failure while blower is operating, blower shall automatically resume operation upon restoration of power supply. In event of power supply failure during system fault, system shall remain in fault condition upon restoration of power supply.

C. Instrumentation:
1. Current Transformers:
a. Provide current transformer for each blower.
b. Locate in LCP to sense motor current and transmit signal to surge protection device.
c. Output signal shall be compatible with surge protection device input.
d. Manufacturer and Product: Schneider, General Electric, or approved equal in accordance with B8.
2. Surge Protection Devices:
a. Provide surge protection device for each blower.
b. Designed to shut down blower when motor amperage drops below set-point corresponding to surge limit on blower performance curve.
c. Adjust relay set-point to suit surge limit of blowers supplied.
d. Include time delay to allow normal blower startup.
e. Manufacturer and Product: Schneider Sepam, General Electric Multilin, or approved equal in accordance with B8.
3. Discharge Pressure Transmitters:
a. Provide pressure transmitter, shipped loose, for each blower for installation on common blower discharge header to adjust blower operating speed to maintain constant discharge pressure.

b. Manufacturer and Product: Siemens DSIII, in accordance with Section 40 91 01, Instrumentation and Control Components.

4. Discharge High Temperature Switches:
   a. Provide temperature switch for each blower for installation on blower discharge piping to shut down blower on high discharge temperature.
   b. Manufacturer and Product: Vendor's standard.
5. Suction Low Pressure Switches:
   a. Provide pressure switch for each blower for installation on blower suction piping to shut down blower on low suction pressure.
   b. Include time delay to allow normal blower startup.
   c. Manufacturer and Product: Vendor's standard.
6. High Vibration Switches:
   a. Provide vibration switch for each blower, factory-mounted on blower casing to shut down blower on high vibration.
   b. Manufacturer and Product: Vendor's standard.
7. Discharge Pressure Gauges:
   a. Provide pressure gauge for each blower for installation on blower discharge piping.
   b. Manufacturer and Product: Vendor's standard.
8. Discharge Temperature Gauges:
   a. Provide temperature gauge for each blower for installation on blower discharge piping.
   b. Manufacturer and Product: Vendor's standard.
9. High Pressure Differential Switches:
   a. Provide pressure differential switch, shipped loose, for each air filter to provide indication to plant PCS on high differential pressure.
   b. Manufacturer and Product: Vendor's standard.

2.10 ACCESSORIES

A. Lifting Lugs: Provide suitably attached for all equipment assemblies and components weighing over 45 kg.

B. Anchor Bolts: Type 316 stainless steel, sized by equipment manufacturer, and as specified in Section 05 50 00, Metal Fabrications (Basic).

C. Equipment Identification Plates: In accordance with Section 40 05 53, Identification Labels for Equipment, Fabricated Tanks, Valves and Piping Systems.

2.11 FACTORY FINISHING

A. Factory prepare, prime, and finish coat exposed metal surfaces of equipment in accordance with Section 09 90 00, Painting and Coating.

2.12 SOURCE QUALITY CONTROL

A. Factory Inspections: Inspect all equipment supplied for required construction, electrical connection, and intended function.

B. Factory Tests and Adjustments:
   1. Test all equipment actually furnished.
   2. Functional Tests:
      a. Perform manufacturer's standard production tests.
      b. Vibration Test:
         1) Dynamically balance rotating parts of each blower and driving unit before final assembly.
         2) Vibration Limits:
            a) Driving Unit Alone: Less than 80 percent of NEMA MG1 limits.
            b) Complete Rotating Assembly Including Blower, Coupling, and Motor: Less than 0.03 mm double (total) amplitude when measured on bearing housing at design speed.
   3. Performance Test:
      a. Test in accordance with ASME PTC 10, Type 2.
      b. Obtain five test points at maximum operating speed; one at rated capacity, one near surge, two between rated capacity and surge, and one near maximum capacity.
      c. Obtain additional test points at 50, 60, 70, 80, 90, and 100 percent of maximum operating speed at rated discharge pressure.
      d. Take minimum of three readings at each test point.
      e. Submit certified test report including test logs and performance curves.
   4. Motor Test: In accordance with Section 26 20 00, Low-Voltage AC Induction Motors.

C. Noise Data:
   1. Sound Pressure Level: Not to exceed unloaded sound power level of 85 dBA, reference 20 $\mu N/m^2$ at distance of 0.9 m, free field.
   2. Noise data need not be submitted if equipment manufacturer guarantees, in writing, that sound pressure level at 1.5 m from any equipment or motor surface, with equipment operating as specified, shall not exceed 95 dBA when measured with sound level meter meeting requirements of ASA S1.4.
   3. If sound pressure level of 95 dBA cannot be guaranteed, submit:
      a. Sound power levels in dB (ref. 10^{-12} W) in octave band center frequencies for blower and motor combination when operating as specified.
      b. Frequency and sound power (or pressure) level of any audible discrete tones.
      c. If character of noise source is such that generated noise is directional, directivity index and associated direction with respect to some reference.
      d. Information on any design restrictions such as, but not limited to, ventilation requirements for totally enclosed equipment and relocating local controls remotely.
   4. Obtain acceptance of test reports from Contract Administrator prior to shipment of equipment.

PART 3 EXECUTION

3.1 DELIVERY, STORAGE, AND HANDLING

A. In accordance with Section 01 61 00, Common Product Requirements.

3.2 INSTALLATION

A. In accordance with manufacturer's written instructions.

B. Anchor Bolts: Place using templates furnished by manufacturer and in accordance with Section 05 50 00, Metal Fabrications (Basic).

3.3 FIELD QUALITY CONTROL

A. Functional Tests:
   1. Conduct on each blower.
   2. Test complete assemblies for correct rotation, proper alignment and connection, and quiet operation.
   3. Vibration Test:
      a. Conduct vibration test according to ISO 10816-3.
      b. Conduct on complete assembly consisting of blower and drive unit, connected and in normal operation.
      c. Assembly shall not exceed vibration specified.
      d. If unit exhibits vibration in excess of limits, adjust or modify as necessary. Units which cannot be adjusted or modified to conform as specified shall be replaced at no additional cost to the City.

B. Performance Test:
   1. Conduct on each blower.
   2. Perform under actual or approved simulated operating conditions.
   3. Test for a continuous 3-hour period without malfunction.
   4. Perform with the Contract Administrator present.
   5. Obtain and record minimum of five operating points during test, each to include blower inlet and discharge pressures, blower discharge air flow rate, and blower operating speed.
   6. Test Log: Upon completion of test, record the following:
      a. Flow measured by plant instrumentation and storage volumes.
      b. Blower inlet and discharge pressures.
      c. Driving motor voltage and amperage measured for each phase.
   7. Adjust, realign, or modify units and retest in accordance with ASME PTC 10 if necessary.

3.4 MANUFACTURER'S SERVICES

A. Manufacturer's Representative: Present at Site or classroom designated by the City, for minimum person-days listed below, travel time excluded:
   1. One person-day for installation assistance and inspection.
   2. One person-day for functional and performance testing and completion of Manufacturer's Certificate of Proper Installation.
   3. Two person-days for pre-startup classroom or Site training.
   4. One person-day for facility startup.
   5. One person-day for post-startup training of the City's personnel. Training shall not commence until an accepted detailed lesson plan for each training activity has been reviewed by the City and Contract Administrator.

B. See Section 01 43 33, Contractor Field Services and Section 01 91 14, Equipment Testing and Facility Startup.

3.5 SUPPLEMENTS

A. The supplements listed below, following "End of Section," are part of this Specification:
   1. Motor Data Sheets.

END OF SECTION

MOTOR DATA SHEET
CHANNEL AERATION BLOWERS B-G351, B-G352

Project: City of Winnipeg SEWPCC Upgrading/Expansion Project

Process/Facility: Headworks

Service: Channel Aeration

Equipment Name: Channel Aeration Blowers

Equipment Tag Number(s): B-G351, B-G352

Type: Squirrel-cage induction meeting requirements of NEMA MG 1.

Manufacturer: For multiple units of same type of equipment, furnish motors and accessories from single manufacturer.

Hazardous Location: ☐ Furnish motors for hazardous (classified) locations that conform to UL 674 and have an applied UL listing mark.

Motor Size (kW): 55.9 ☒ Min. ☐ Max.	Guaranteed Minimum Efficiency at Full Load (%): 93.6
Voltage: 575	Guaranteed Minimum Power Factor at Full Load (%): 87.1
Phase: 3	Service Factor (at rated max. ambient temperature): ☐ 1.0 ☒ 1.15
Frequency (Hz): 60	Enclosure Type: TEFC
Synchronous Speed (rpm): 3600 max.	Mounting Type: ☒ Horizontal ☐ Vertical
☐ Constant Speed	Vertical Shaft: ☐ Solid ☐ Hollow
☐ Two-speed Speed (rpm): Slow _____ Fast _____	Vertical Thrust Capacity (N): Up _____ Down _____
☒ Multi-speed Speed (rpm): Min. 1800 Max. 3600	☒ Adjustable Speed Application (inverter duty rated) In accordance with Section 26 29 23, Variable Frequency Drives. Operating Speed Range: 50 to 100 % of rated speed
Variable Speed Load Classification: ☒ Variable Torque ☐ Constant Torque ☐ Constant Power	☐ Thermal Protection: _____ ☐ Space Heater: _____ volts, single phase ☒ Oversize main terminal (conduit) box for motors ☒ Terminal for connection of equipment grounding wire in each terminal box
Winding: ☒ One ☐ Two	

ADDITIONAL REQUIREMENTS

☒ In accordance with Section 26 20 00, Low-Voltage AC Induction Motors.

SECTION 43 11 15.15

GEARLESS TURBO BLOWERS

EQUIPMENT AND COMPONENT NUMBERS

ID No.	Equipment Description
B-R201	Process Air Blower
B-R202	Process Air Blower
B-R203	Process Air Blower
B-R204	Process Air Blower
B-R205	Process Air Blower
B-R206	Process Air Blower

PART 1 GENERAL

1.1 WORK OF THIS SECTION

A. Work under this Section includes furnishing, installing, testing and startup of gearless turbo blowers, blower Master Control Panel (MCP), related equipment, and required appurtenances for a complete installation in accordance with Drawings and Specifications.

B. Blowers shall be complete prepackaged units.
   1. Units shall have at least the following items integrated into unit:
      a. High-efficiency, high-speed motors shall be furnished as an integral part of the blower core assembly.
      b. Air bearing.
      c. Complex, aerodynamic profile, machined impeller.
      d. Pressure sensor and alert for air filter condition.
      e. Pressure sensor for ambient pressure
      f. Pressure sensors for discharge conditions.
      g. Variable frequency drive.
      h. Local control panel (LCP).
      i. Internal vibration and dynamic effect absorption mounts if required.
      j. Temperature sensors for motor, bearings, inlet, and discharge air flow.
      k. Line input reactor to maintain high power factor.
      l. Sinewave (Sinus) filter.
      m. Uninterruptable Power Supply (UPS): Industrial grade with 10-minute power supply to the blower control panel.
      n. Stainless steel or painted carbon steel.
   2. Manufacturer shall provide with each blower:
      a. Discharge expansion joint.
      b. Inlet expansion joint.
      c. Inlet expansion joint for enclosure cooling if required.
      d. Inline fan for enclosure cooling discharge if required
      e. Discharge check valve.
      f. Blowoff valve.

g. Blowoff silencer.

C. Local blower functions shall be controlled by a PLC or an industrial CPU/Microcontroller housed inside of blower enclosure, and each blower shall have a panel-mounted Operator Interface Terminal (OIT) for status indication and local control.

D. One Master Control Panel (MCP) shall be supplied to automatically control staging and speed control of the series of blowers. The MCP shall control five duty blowers and one standby blower. MCP shall communicate with Plant Control System (PCS) in order to determine how to operate blowers based on operating conditions.
   1. Blower Master Control Panel shall control the blower speed(s) and to stage all blowers to control the common blower discharge header pressure. The blower control shall be in response to the pressure control loop setpoint from the PCS with trimming based on the position of the most open valve (MOV). The PCS shall control the air flow to the process. The blower header pressure will react to changes in the process air flow. The Blower Master Control Panel software shall be coordinated with the PCS software. During all blower start/stop events, or any similar blower controls, the Blower Master Control Panel shall be coordinated with, tested with, and programmed to allow the PCS to control the air flow to the process. Numerous interlocks and communications of information shall be required to execute the programming of the PCS. The two systems shall work seamlessly together to provide one stable system.
   2. Blower Master Control Panel shall have an Operator Interface Terminal (OIT) for status indication and operator interface with the blower master controller.
   3. Coordination Meetings: Blower supplier’s programmer shall attend Software Development Meetings in Winnipeg, Manitoba, to coordinate and determine interlocks, signals, and procedures that must be used to coordinate staging of blowers and pressure control with automated processes controlled by the PCS.
   4. Blower supplier’s programmer shall be required to be onsite during commissioning as defined hereinafter. Blower supplier is required to use the same programmer throughout project, including all meetings, Site visits, startup, and functional/performance testing.

1.2 REFERENCES

A. The following is a list of standards which may be referenced in this section:
   1. Acoustical Society of America (ASA): S1.4, American National Standard Specification for Sound Level Meters.
   2. American Bearing Manufacturers Association (ABMA).
   3. American Society of Mechanical Engineers (ASME):
      a. B16.1, Grey Iron Pipe Flanges and Flanged Fittings Classes 25, 125, and 250.
      b. B16.5, Pipe Flanges and Flanged Fittings NPS 1/2 Through NPS 24 Metric/Inch Standard.
      c. PTC 10, Performance Test Code on Compressors and Exhausters.
   4. American Society of Heating, Refrigerating, and Air-Conditioning Engineers (ASHRAE):
      a. 52.2, Method of Testing General Ventilation Air-Cleaning Devices for Removal Efficiency by Particle Size.
   5. American Society for Testing and Materials (ASTM):
      a. A36/A36M, Standard Specification for Carbon Structural Steel.
      b. A48/A48M, Standard Specification for Gray Iron Castings.

6. Canadian Electrical Code (CEC).
7. Electrical Equipment Manufacturers Advisory Council (EEMAC):
   a. M1-7 Motors and Generators.
8. Nationally Recognized Testing Laboratory (NRTL)
9. Underwriters Laboratories Inc. (UL)
10. Canadian Standards Association (CSA)
11. TUV (Technischer Überwachungsverein)
12. International Standards Organization (ISO):
    a. 10816-3, Mechanical Vibration - Evaluation of Machine Vibration by Measurements on Non-Rotating Parts; Part 3: Industrial Machines with Nominal Power Above 15 kW and Nominal Speeds Between 120 r/min and 15000 r/min When Measured in Situ.
13. National Electrical Manufacturer's Association (NEMA):
    a. MG-1 Motors and Generators.
14. Occupational Health and Safety Act (OHSA).
15. 2010 National Building Code of Canada, with 2011 Manitoba Amendments (NBC).

1.3 DEFINITIONS

A. Ambient pressure: absolute pressure of the ambient air measured in the vicinity of the blower inlet measured at the stagnation condition. This will equal barometric pressure under typical conditions.

B. Ambient temperature: total temperature of the ambient air in the vicinity of the blower, but unaffected by it.

C. Blower package: Blower package is defined by the limits of the scope of supply as specified in the overall project contractual agreement pertaining to the blower installation. This shall include all deliverable components to form an operational machine including but not limited to inlet, discharge, and all power devices that affect power consumption.

D. Discharge Pressure: Pressure in kPa gauge at blower package discharge.

E. Discharge Temperature: Temperature in degrees C at blower package discharge.

F. Inlet Pressure: Pressure in kPa gauge at blower package inlet.

G. Inlet Temperature: Temperature in degrees C at blower package inlet.

H. Pressure Differential: Difference between pressure at the package discharge and package inlet.

I. Normal Cubic Metre per Minute (Nm^3/min): Air volume in cubic metre per minute corrected to standard conditions of 20 degrees C, 101.325 kPa(a) (14.70 psia), and 36 percent relative humidity.

J. Wire-to-air Power: The blower package total wire power is the electrical power measured at the power input to the blower package. This shall include all power consuming electrical components of the blower package as required for installation and normal operation as

identified herein. If the blower package receives multiple power feeds, this is the sum of all wire powers measured individually.

K. Wire-to-air Efficiency: Is the wire to air isentropic efficiency of the entire blower package. This includes energy losses from all components within the blower package. This is the ratio of total measured wire-to-air (system) power demand to the power of compression due to an assumed reversible, adiabatic compression process with constant entropy.

1.4 QUALITY ASSURANCE

A. Single Source Responsibility: All blowers and appurtenances furnished under this Section shall be furnished by a single manufacturer who is fully experienced, reputable and qualified in the manufacture of the equipment to be furnished. Blower manufacturer shall also provide a written warranty as specified herein for the blower and blower package and shall state that they have reviewed the design and application and that the equipment has not been misapplied.

B. The manufacturer of the gearless turbo blowers shall be completely responsible for the proper design or selection of their system components, including but not limited to; blowers, adjustable frequency drives, heat exchangers, blow-off valves, check valves, and all applicable blower instrumentation and controls. All equipment shall perform as specified and the completed installation shall operate in accordance with the requirements of the Drawings and Specifications.

C. The requirements of these Documents represent the minimum acceptable standards for the blower equipment for this Project. Equipment which is a "standard product" with the manufacturer shall be modified, redesigned from the standard mode for this specific project, and shall be furnished with special features, accessories, materials of construction or finishes as may be necessary to conform to the quality mandated by the technical and performance requirements of the Specification.

D. Blower supplier’s programmer shall attend Application Software Development Workshop at Contract Administrator’s office in Winnipeg, Manitoba.

1.5 MANUFACTURER QUALIFICATIONS

A. The manufacturer of the gearless turbo blowers shall be experienced in manufacturing gearless turbo blowers similar to those indicated for this Project and have a record of a minimum of five in-service successful installations in North America with total system capacity in each installation equal or superior to 50 percent of the system capacity specified under this specification section.

B. A list of installations shall be furnished, to show conformance with article 1.5 including names and telephone numbers of contacts.

1.6 SUBMITTALS

A. Submittals shall be in accordance with Section 01 33 00, Submittal Procedures and as described herein.

B. Informational Submittals:
   1. Quality of Construction:
      a. Proof of ULC/CSA or cTUV Certification: Submit proof of ULC/CSA or cTUV certification on the same model and size proposed. ULC/CSA or cTUV certification must be demonstrated prior to acceptance of proposed equipment. Failure to meet this requirement will result in immediate rejection.
      b. Statement of conformance letter stating conformance to specifications with all exceptions noted. Statement of conformance must be signed by an individual authorized to make such statements.
      c. Bill of Materials: Complete bill of materials of all components and equipment supplied. Bill of materials shall include make and model number and replacement cost of the primary components including, but not limited to, the following:
         1) Adjustable Frequency Drive (AFD).
         2) PLC.
         3) Sensors (temp, pressure, vibration, etc.).
         4) Control transformer.
      d. Spare Parts: Include a list of spare parts and nearest supplier (identify supplier's name and address, and other pertinent contact information).
   2. Warranty - Manufacturer to modify warranty as required to meet project requirements.
   3. Service Agreements: Include a detailed description of the manufacturer's service options. Description shall include pricing structure.

C. Action Submittals: Shop Drawings and Product Data (for Each Blower Set):
   1. Documentation of modifications to the manufacturer's standard design to meet the requirements specified in this section and where the manufacturer's standard design does not comply with the specified performance, features, functions, and materials of construction specified herein.
   2. Structural: Anchorage and bracing drawings and cut sheets.
   3. Mechanical:
      a. Complete Specifications, descriptive drawings, catalog cuts, and descriptive literature which shall include make, model, dimensions and weight of the blowers, motors, and accessories. Include weight of largest components requiring removal for maintenance. All equipment selections shall be highlighted or circled.
      b. Number of required units for each operating design point, including one standby unit.
      c. Detailed layout drawings and dimensional data, including minimum clearance distances around equipment required to access equipment for normal service, repair, and removal.
      d. Data on the characteristics and performance of the units to indicate ability to meet the system performance specified herein.
         1) Blower curves showing package discharge pressure and flow capacity, wire to air efficiency and blower package total wire power demand over the entire range from shutoff to maximum capacity. Clearly show the surge pressure and surge margin associated with each of the performance speed curves. Provide blower curves for all design operating conditions specified herein.
            a) On the performance curves indicate the pressure (psig), flow capacity (scfm), power demand (hp), and wire to air efficiency at guarantee points.

b) Furnish performance curves at full speed and a minimum of four lower speeds to indicate specified volume turndown. The capacity line above which the unit should be operated to preclude surging. The capacity line below which the unit should be operated to preclude run out.

e. Complete information on enclosure cooling air flow and temperature conditions
f. Estimated blower sound level data, for both inlet and radiated conditions, and description of sound control measures required to meet the specified sound levels.
g. Maximum heat dissipation from blower enclosure to the space and any ventilation requirements.
h. Provide information about internal heat exchangers.

4. Electrical:
   a. Motor Data: Complete motor data shall be submitted with the driven machinery Shop Drawings. Motor data shall include items applicable to this motor, such as:
      1) Descriptive information.
      2) Nominal horsepower.
      3) Indication of VFD Drive rated motor
      4) Details of the motor termination box (including details on lugs, physical size and orientation of termination box).
      5) Voltage, phase, and frequency ratings.
      6) Full load current.
      7) Locked rotor current.
      8) Full load speed.
      9) Safe stall time.
      10) Insulation class and temperature rise classification. Certification that motors are inverter duty rated.
      11) Multispeed load classification (for example, variable torque).
      12) Guaranteed minimum full load efficiency. Also provide nominal efficiencies at 1/2 and 3/4 load.
      13) Description, rating, and wiring diagram of thermal protection or overtemperature protection.
      14) Power factor at 1/2, 3/4, and full load.
   b. Wire-to-air power at 1/2, 3/4, and full design flows and conditions.
   c. System wiring diagrams, with recommended power feeder conductors sizes and feeder breaker sizes.
   d. Adjustable Frequency Drive Data:
      1) Overall drive system operating data, including efficiencies, input currents, and power factors, at driven equipment actual load and rated system input voltage, at 0, 40, 60, 80, 100 and 110 percent of rated speed.
      2) Information on harmonics generated by the drive.
      3) Complete system rating, including all nameplate data, continuous operation load capability throughout speed range of 0 to 120 percent of rated speed.
      4) Complete physical and electrical characteristics of the drive
   e. Transformer information
5. Pre-Packaged Blower Controls:
   a. Complete specifications, descriptive drawings, catalog cuts, and descriptive literature which shall include make and model of instrumentation and components of control system.

b. Complete process and instrumentation diagrams (P&IDs), network interface drawing, electrical schematic and wiring diagrams, electrical ladder diagrams, interconnection diagram showing power and control interfaces among all system components, and instrument settings.
c. Control panel arrangement drawings. Include wiring and schematic diagrams, program documentation (PLC-based), network equipment, mounting, location, and communications network diagram, and I/O listing. Include panel interior and door layout drawings, and sample operator interface screens.
d. Operating description for the control panels. Provide detailed description covering all specified logic and sequences of operation.

6. Blower Master Control Panel (MCP): Submittals as specified in Section 40 99 90, Packaged Control Systems. Outline drawings for all items that are shipped loose.
7. Factory Test:
   a. Submit factory test plan outlining all required testing activities within this section for approval a minimum of 12 weeks prior to testing.
   b. Submit factory test results including manufacturer's quality assurance.
   c. Include copies of original test data collection forms.
8. Manufacturer's Field Report: Submit manufacturer's field report of inspections, tests, and observations for all items furnished under this Section.

1.7 SOFTWARE DEVELOPMENT MEETINGS

A. Purpose: Meet with Contract Administrator in Winnipeg to properly coordinate all controls, networking functions, interlocks, and all functions between the blower package controls and plant PLCs, and to ensure software controls interface requirements are understood and necessary information is exchanged.

B. Topics:
   1. Control functions available from LCPs, MCP, and PCS system.
   2. Network address assignments.
   3. PLC functionality including conventions for status and alarms, LOCAL/REMOTE and AUTO/MANUAL control modes.
   4. PLC to PLC communication approach, communication monitoring, and alarms.
   5. Blower status monitoring and alarms.
   6. Testing requirements.

C. List of Workshops:
   1. Initial Software Development Workshop:
      a. Schedule: 30 days prior to manufacturer beginning software development.
      b. Duration: 2 hours.
      c. Location: Conference call.
      d. Required Attendance:
         1) Vendor's software programmer responsible for application software for PLC/Controller and OIT.
         2) Manufacturer's Project Manager.
   2. Intermediate Software Development Workshop:
      a. Schedule: 30 days before beginning Factory Demonstration Test.
      b. Duration: 2 hours.
      c. Location: Conference call.

d. Required Attendance: Manufacturer's PLC and OIT software programmer responsible for application software.

3. Software Factory Demonstration Test:
   a. Schedule: Minimum of 30 days before Functional Test Part 1.
   b. Duration: One business day.
   c. Location: At a site located in North America, TBD.
   d. Required Attendance: Manufacturer's PLC and OIT software programmer responsible for application software.
   e. Purpose: Test manufacturer's PLC program with PCS PLC program to confirm that all necessary interaction and feedback works correctly together.
4. These workshops are in addition to the Site visits required of manufacturer's PLC and OIT software programmer described in Section 3.4.

1.8 Operation and Maintenance Manuals

A. As specified in Section 01 78 23, Operation and Maintenance Data.

B. Include the following additional information in the O&M Manual:
   1. Operating and Maintenance Manuals and Maintenance Summary Forms shall be submitted for the turbo blower sets specified herein.
   2. Certified factory test reports for motor and blower and performance curves for blowers, field startup, and test reports.
   3. Technical assistance contact information.
   4. Shall include instructions for operation and maintenance for the entire blower system and all appurtenances in this section.
   5. Provide project record documents showing as-built dimensions, as-built wiring and control diagrams, as-built logic diagrams and design information for supplied parts and equipment.
   6. Provide a detailed description of the control system.
   7. Provide panel drawings, wiring diagrams, specifications and a detailed description of the local and master control panels.

1.9 SERVICE REQUIREMENTS

A. Site Conditions:
   1. The blower units will operate within a municipal wastewater treatment plant, and will be installed in a ventilated building as shown on Drawings. The blowers will discharge process air to a common air discharge line as shown on Drawings. The blowers will discharge blower enclosure cooling air inside the blower room.
   2. The blowers process and cooling air intake pipes are provided with Enduralast® Hi-Flow Synthetic Medium, 98 percent efficient at 10-micron (nom) cartridge filters/silencers.
   3. Site elevation is approximately 230 m above mean sea level (MSL). Additional conditions as listed on data sheets at the end of the Section.

B. Operating Conditions: The blowers shall be furnished for the design conditions per data sheets at the end of the section, and shall be capable of stable operation at all conditions indicated on the equipment data sheets within the operating envelope.

C. Blower Power Consumptions Shall Be Guaranteed: In the event the actual power draw (as tested in factory and defined as wire-to-air) is in excess of the specified power draw, the units shall be reworked and retested at no additional cost to the City, until they comply with the Specifications.

1.10 DELIVERY, STORAGE, AND HANDLING

A. Shipping:
1. Ship equipment, materials and spare parts complete except where partial disassembly is required by transportation regulations or for protection of components.
2. Pack spare parts in containers bearing labels clearly designating contents and pieces of equipment for which they are intended.
3. Deliver spare parts at same time as pertinent equipment.

B. Receiving:
1. The Manufacturer shall provide an authorized representative to witness, inspect and inventory items upon delivery to Site.
2. Verify all items on manifest have been off-loaded and are undamaged.
3. Confirmation from the Contractor that items have been received.
4. Inspect each box to confirm that each spare part has been received.
5. Photograph each item off-loaded.
6. Obtain Contractor's signature on the bill of lading confirming that each item was delivered and provide a copy to the City and Contract Administrator.
7. Provide equipment, material and spare parts storage, handling and safeguard instructions to the Contractor.

C. Storage:
1. All equipment, accessories and spares shall be stored in a climate controlled environment as recommended by the manufacturer.

1.11 SPARE PARTS

A. The manufacturer shall furnish all special tools and appliances necessary to disassemble, service, repair, and adjust the equipment and appurtenances. The following spare parts shall be furnished:
1. One set of all applicable temperature and pressure control sensors.
2. One I/O board.

1.12 WARRANTY

A. The blowers and appurtenances shall be warranted for a period of 3 years from the City's acceptance of partial utilization of equipment. The cost for an additional 3 year warranty (total of six) should also be provided with the submittals for the City's consideration. Blowers and appurtenances shall be warranted to be free from defects in workmanship, design or material. If the equipment should fail during the warranty period due to a defective part(s), it shall be replaced and the unit(s) restored to service at no expense to the City.

B. This warranty shall not deprive the City of other rights the City may have under other provisions of the Contract Documents and is in addition to and runs concurrent with the warranties made under the general warranty requirements of Contract Documents.

C. Time and materials used to correct defective equipment shall be provided at no additional cost to the City and in addition to time periods specified above for programming and commissioning.

D. Blower manufacturer shall guarantee to ship any parts required for emergency breakdown of repairs on all blowers within 5 working days of acknowledged receipt of the order, or the parts are free of charge to the City.

E. Blower manufacturer shall include with the submittals for the City's consideration of any optional maintenance service contract plans offered for the duration of the warranty and the extended warranty. Provide the details and the cost of the program options available for the City.

PART 2 PRODUCTS

2.1 MANUFACTURERS/PRODUCTS

A. Materials, equipment, and accessories specified in this section shall be products of:
   1. APG-Neuros or approved equal in accordance with B8.

2.2 DESIGN REQUIREMENTS

A. When measured in accordance with the latest ISO 2151 or ASME PTC-36 "Measurement of Industrial Sound," and operating at the maximum design capacities, the tested sound power values from blowers shall not exceed the values as scheduled in the attached data sheets.

B. Blowers shall be designed to operate at maximum capacity with a minimum rise to surge margin of 13.8 kPa (2.0 psig) away from surge at blower maximum capacity along constant speed curve, and at minimum capacity with a minimum rise to surge margin of 3.45 kPa (0.5 psig) away from surge.

C. The blowers shall be capable of variable speed operation with a minimum turndown of at least 50 percent from its maximum capacity and shall use an integral variable frequency drive. The blower shall be capable of operating continuously and satisfactorily at any point between the minimum and maximum flows without any surge, vibration, hunting, or excessive heating of bearings or motor.

D. Each blower package shall be designed to operate to maximize overall system wire to air efficiency over the range of operating conditions.

E. Intake and filter performance losses shall be included in the blower performance calculation.

F. Complete blower package shall be certified by a NRTL program listed organization such as UL, CSA or TUV. Certification by field inspection shall not be permitted.

G. Noise criteria: Each blower enclosure and blowoff valve shall not exceed 85 dBA at 100 percent speed and 10.25 psig discharge pressure. Manufacturer shall supply sound pressure levels (dBA) at 100 percent speed and discharge pressure and for all operating design points outlined in this specification.

H. Heat generated from the blower shall be discharged directly inside the blower room. Heat generated from the blower enclosure shall not be channeled through the blower discharge as the heat will be used to heat several rooms within the blower building.

2.3 FEATURES

A. General:
1. Blowers shall not require oils or lubricants. Blowers shall be capable of variable speed and output operation.
2. Blower material internals and externals shall be appropriate for the service conditions specified herein.
3. Blower casing shall have a maximum continuous duty design temperature of 205 degrees C (400 degrees F), and a design pressure of 345 kPa(a) (50 psig).
4. Each blower shall be supplied with built in vibration isolating mounts. Blower manufacturer shall be responsible for attenuating noise and vibration in the blower package such that no special installation base shall be required nor shall any vibration form the blower package be transmitted to the floor or intake and discharge base or the piping. Manufacturer shall supply acceptable vibration levels for the entire blower assembly over the entire operational range of the supplied unit.
5. Fasteners: All bolts, nuts, washers, and other fasteners shall be Type 304 or Type 316 stainless steel.

B. Blower Accessories:
1. Inlet and Discharge Expansion Joint: Provide each blower with an inlet and discharge expansion joint capable of withstanding the vacuum, pressure, and high discharge air temperature up to 150 degrees C under all operating conditions. The expansion joint shall include carbon steel flanges drilled for standard ANSI 150-pound pattern. Provide each blower with an inlet expansion joint for the enclosure cooling if required for the application.
2. Blower Bypass (Blow-off) Valve: Provide manufacturer’s standard actuated valve. Controls for the valve shall be mounted in each LCP.
3. Bypass Valve Silencer: A bypass valve silencer shall be provided for each blower. The silencer shall be an integral unit, fitted with one flange for direct bolting to the bypass valve. Silencer shall be high performance type including internal baffles packed with sound absorbent material, with maximum 95 dBA outlet at 1 m distance from blowers.
4. Blower Check Valve: Provide each blower with a full port, wafer-style, dual plate, center elastomeric hinge, spring closure check valve that shall be installed on the discharge line. Valve shall be Cast Iron body with Type 316 stainless steel internals, with a Type 302/316 stainless steel spring and Viton seals. Valve shall meet API 594standard, ANSI 125 pound with Viton seal. Sealing Check valve shall be Techno Check, US Valve or approved equal in accordance with B8.

C. Blower:
   1. Impeller: The impeller shall be of the backswept three dimensional high efficiency configuration with two stages in one (axial and centrifugal) and with first lateral critical speed at least 120 percent of the maximum allowable operating speed. The impeller shall be machined from a solid forging of aluminum alloy 7075 or 17-4PH cast stainless steel and mounted directly to the motor shaft and shall be statically and dynamically balanced.
   2. Bearings: Blower/motor bearings shall be of the air foil type with smooth, bump or leaf style foil and shall not require oils or lubricants for adequate operation. The bearings shall be designed to a minimum of 20,000 starts or a minimum of 10 years between replacements.

D. Equipment Housing:
   1. Each blower shall be supplied with a sound enclosure covering the entire blower package built of stainless steel, painted carbon steel or aluminum. The sound enclosure must be designed for easy inspection and maintenance of all blower package components. Quick release panels, each with at least two handle locations, must provide easy and quick access for routine maintenance of the blower and the package components. For all panels heavier than 23 kg, hinged doors must be supplied. The blower package enclosure shall protect against falling water, condensation, and dust.
   2. Blower cooling system shall consist of liquid or air cooling. Any liquid cooling system shall be closed loop and require no external connections or water supply from the plant. Cooling system shall be capable of accommodating range of ambient conditions described on equipment data sheets.

      If required, provide flanged inlet connection of round duct to equipment housing.

E. Electrical Components and Accessories:
   1. Provide all necessary electrical components and wiring for a complete, functional system. All equipment in the blower package shall be prewired.
   2. Each blower shall be fed from a dedicated 600 VAC to 480 VAC transformer..
   3. Wiring: The Drawings and Specifications indicate the anticipated wiring for the equipment provided under this section. If additional wiring is required, or if required wiring does not match what is indicated, the contractor shall make the necessary modifications to the electrical wiring and documentation as part of the lump sum price. All wiring shall meet the requirements of NFPA 70 or nationally recognized testing laboratory. All insulation shall be rated 600V minimum for 300 VAC or lower systems and 1000V for power cabling (at 600 VAC or 480 VAC voltage systems). All low-voltage (24V) analog signals shall be run in twisted, shielded pair cable with 600V rated insulation.
   4. Power Disconnect: Blowers shall be provided with an externally operable power disconnect switch.

5. Blower Drive Motor: Each blower shall be supplied with a Permanent Magnet Synchronous (PMSM) high-speed motor that has no physical connection between stator and shaft, therefore eliminating brushes, slip rings, or break resistors. It shall operate as specified on the equipment data sheets. The PMSM must be combined with a Sine Wave Filter (Sinus Filter) and Input Line Reactor. Induction or Brushless DC motors shall not be acceptable.
    a. The motor shall be able to start under the starting conditions required. Blower manufacturer shall be responsible for coordinating the starting torque requirement of the blower and the motor with the VFD to ensure proper operation of the system.
    b. The motor shall have a 1.15 service factor.
    c. The motor shall be capable if operation at the rated voltage with a variance of +/- 5 percent of the nameplate frequency.
    d. The motor shall be capable of continuous operation at full load and rated frequency with a voltage variance of +/- 10 percent of the nameplate voltage.
    e. All motors shall be sufficient size for the duty to be performed and shall not exceed their full-rated load when the driven equipment is operating at specified capacity and over the entire operational range. Unless otherwise noted, motors shall not be overloaded at any of the specified discharge conditions.
    f. Stator cores shall be made of low loss, non-aging electrical sheet steel with insulated laminations. Stator coils shall be form wound and of identical size, shape, insulation and number of turns.
    g. Stators shall be form wound and insulated with glass and mica applied directly to the coils. Motors shall have a Class H rated to 180 degrees C (356 degrees F), non-hygroscopic epoxy vacuum/pressure impregnated insulation system, limited to the temperature rise specified herein. All connections shall be brazed, with no crimp connections used except for terminals.
    h. Motor shall be rated for inverter duty.
6. Variable Frequency Drive:
    a. Variable frequency drive shall be manufacturer’s standard design, generally of the pulse-width modulation design, with all necessary components to provide a complete and functioning blower system capable of meeting the design requirements.
    b. Variable frequency drive provided for each blower shall have a service and support facility operation in Canada or the U.S.A. for supply, support, and the provision of replacement components.
    c. Variable frequency drive inverter shall be listed by a National Recognized Testing Laboratory in accordance with UL 508 or TUV.
    d. Variable frequency drive shall be integrally mounted within blower enclosure.
    e. Drive shall be provided with an internally mounted, 5 percent minimum input line reactor. There are active harmonic filters (and power factor correction units) installed at the switchboards that feed power to the blowers. The blower system shall be designed to operate seamlessly with the active harmonics filters at the upstream power supply (at the 600 VAC supply switch switchgear).
    f. Variable frequency drive provided for each blower shall have a components and design strategy to mitigate the impacts of heat and stress on the PMSM that decrease motor life. Each VFD shall have an integrated user interface that includes field bus connection and free available support software. Provide control of VFD via touch screen control panel and PLC.

2.4 INSTRUMENTATION AND CONTROLS

A. General:
1. Each blower shall be supplied with a NEMA 12 Local Control Panel (LCP) utilizing a programmable logic controller (PLC) or industrial CPU/Microcontroller and touchscreen Operator Interface Terminal (OIT).
2. A blower Master Control Panel (MCP) will be used to sequence blowers ON and OFF, and control blower capacity as described herein. Refer to Section 40 99 90, Packaged Control Systems, for additional requirements.
3. Blower supplier's programmer shall attend Application Software Development Workshop at Contract Administrator's office in Winnipeg, as described in Section 1.7, Software Development Meetings.

B. Instrumentation:
1. Instrumentation for each blower shall include, as a minimum:
   a. Inlet air temperature transmitter element (RTD) and indicating transmitter.
   b. Inlet air pressure indicating transmitter.
   c. Discharge air temperature transmitter element (RTD) and indicating transmitter.
   d. Discharge air pressure indicating transmitter.
   e. Air flow sensor (or method to estimate by calculation).
   f. Blower speed sensor (or method to estimate it).
   g. Bearing temperature sensors.
   h. Motor temperature sensors.
   i. Ambient pressure transducer.
   j. Vibration sensors.
2. Instrumentation shall be Siemens products, where possible.
3. See Specification 40 91 01 Instrumentation and Control Components Section 2.8 for instrument requirements.

C. Master Control Panel:
1. General: All instrumentation and control components provided as part of the Master Control Panel (MCP) shall be in accordance with the requirements and component qualities specified in Section 40 99 90, Packaged Control Systems. The Blower MCP shall meet the requirements of Section 40 99 90, Packaged Control Systems in its entirety.
2. Communication between the PCS and MCP shall be via Ethernet only. The MCP shall provide two separate Modbus TCP Ethernet ports on different subnets for connection to both the Primary and Secondary facility control system networks.
3. MCP will be a NEMA 12 enclosure separate from the blower LCPs. The panel shall be factory assembled and wired such that field wiring shall consist only of connection to panel terminals.
4. MCP shall be designed for minimum ambient temperature of 40 degrees C.
5. Power Supply to Panel: Dual 120V, single-phase, 60 Hz supplies to each panel, one UPS supply and one non-essential supply. Provide redundant 24 VDC power supplies for control system equipment with alarms to the control system for power supply failure. Power supply to all instruments shall be obtained from the associated control panel.
6. Functional Requirements:
   a. Provide one MCP capable of controlling all blowers.

b. The MCP shall be responsible for stopping, starting, and modulating each blower's speed in order to maintain a pressure setpoint. The MCP shall contain a PLC. Provide control scheme to operate with a minimum number of blowers online while maintaining maximum system efficiency.
c. The MCP shall control blower operation to ensure one blower remains in standby.
d. The blowers will be controlled to maintain a pressure setpoint given by the PCS in order to deliver varying amounts of air to the process (IFAS basins, post aerobic zones and various channels). Pressure will be trimmed based on the position of the most open valve (MOV).
e. Pressure transmitter PIT-R2091 shall be provided by others (See P&ID Drawing number 102-PPID-R201). This transmitter will be a loop powered 4-20 mA device wired directly to the MCP and shall be used as the process value for pressure control. Provide an analog input card and 24 VDC power as required.
f. In REMOTE-AUTO control mode, the MCP will provide START/STOP commands and a remote speed command to each blower.
g. In REMOTE-MANUAL mode, blowers can be controlled from the OIT on the MCP panel.

7. Control System Requirements:
   a. PLC shall be a Schneider M580 PLC with two Ethernet connections with different subnets; no exceptions.
   b. Panel mounted OIT shall be consistent with the City document 612620-0015-40ER-0001 "HMI Layout and Animation Plan" and 612620-0014-40ER-0001 "Tagname Identification Standard". OIT shall be a Schneider Magelis XBT or GTO panel and have a 12 inch or greater display.
   c. The panel mounted OIT will be fully replicated in the Plant HMI. Coordinate with the Systems Integrator to provide full replication of the OIT on the Plant HMI. Provide a means for operators to select either the local OIT or the Plant HMI as the active system.
   d. PLC and HMI programs shall have full read/write functionality when turned over to the City.
8. MCP Control Interfaces with PCS via Ethernet Connection:
   a. Required MCP control interfaces are estimated and may be modified at the Application Software Development Workshops.
   b. Inputs:
      1) PCS Remote Control mode ACTIVE.
      2) Remote START/STOP for auto sequence.
      3) Remote PRESSURE setpoint command.
      4) Most Open Valve position
      5) Maximum number of blowers allowed to run (for purposes of staged restart after power recovery).
   c. Outputs:
      1) Blower auto sequence status, including any pertinent information about the sequence.
      2) Signals to indicate when a blower starting, stopping, or surging condition is imminent or in progress.
   d. All status signals from the blower LCPs to the MCP (as described below) must be relayed to the PCS in order to be visible at the plant HMI.

e. Provide blower header pressure control based on a pressure setpoint from the PCS The process basins airflow control loops are controlled by the PCS. However, the Most Open Valve position will be sent to the MCP in order to optimize the system. Blower MCP and PCS shall communicate and jointly perform control functionality of the system processes in order to provide adequate stability and control of the entire aeration system. Communication signals as well as control functionality to be configured shall be determined during the Software Application Development Workshops, and tested during the Software Factory Demonstration Test as well as Functional and Performance Tests. The Contract Administrator reserves the right to reject the functional and Performance Tests if the blower system fails to perform adequately and interact with PCS correctly under all typical operating conditions, in order to ensure total system performance (blowers, pressure control, FCVs, and flow control). Typical operating conditions include, but are not limited to:
   1) Blower starting or stopping in both auto and manual modes.
   2) Adjustment of FCVs in basins in both auto and manual modes.
   3) Blower failure due to surge or any other condition.
   4) FCV failure (fail open, close, or failure to move).
   5) Typical temperature and humidity conditions.
   6) Typical minimum and maximum operating water levels in the IFAS basins.

D. Local Control Panels for Blowers:
   1. General: Provide a comprehensive blower machine control and protection system that meets the system requirements specified, safely start and stop the machine, and protect the machine from adverse operating conditions and equipment failures. The blower machine control and protection system shall be monitored and controlled from a Local Control Panel (LCP). Each blower's LCP shall be integral with the blower enclosure.
   2. LCP shall be designed for a minimum ambient temperature of 40 degrees C.
   3. Control for all components of an individual blower shall be provided by the LCP at the blower. The LCP shall provide all control and monitoring functions required for the operation, monitoring, and protection of the blower including, but not limited to, timing, interlocks, and permissive functions required for safe operation of its specific blower.
   4. The LCP shall contain the manufacturer's standard controller, either an industrial controller or PLC.
   5. The OIT on the LCP shall be the manufacturer's standard.
   6. The operation of a set of individual blowers will be coordinated and controlled by the blower MCP.
   7. Ethernet switches shall be provided as required to allow for required communication between the MCP, LCPs and OITs.
   8. Each blower LCP shall provide a separate Modbus TCP Ethernet port for connection to the PCS for monitoring. All monitoring points shall be available via Modbus TCP.
   9. Each blower LCP shall provide a voltage free contact with less than 2 mA minimum switching current at 24 VDC for both running status and fault alarm for PCS 24V discrete input interface. Fault alarm shall be wired failsafe (contact opens to alarm).
   10. The blower manufacturer shall provide all programming and system configuration necessary to make the PLCs, Ethernet interface, and blower staging sequence fully functional, as described herein.

11. Functional Requirements:
    a. The blowers shall start under an automatic sequence initiated by the local start signal at the LCP when in LOCAL control, or the remote start signal from the MCP when in REMOTE control. All bypass valves shall be equipped with limit switches on both the open and closed position and remote status if the valve is provided with a local override to indicate position. If components are not properly positioned, they shall move to their respective start positions automatically via the PLC logic.
    b. A blower LCP shall automatically perform dynamic adjustments to the blower operating range during seasonal and ambient temperature variations such that the attainable maximum and minimum flow is always optimized. Dynamic adjustments shall not expose the blower to surge or runout conditions.
    c. A blower LCP shall perform dynamic changes (i.e. speed) when the blower operating point approaches the surge boundary. The PLC automatically increases the speed of the blower such that surge is avoided and the blower Bypass Valve is not engaged.
    d. The surge detection system shall open the bypass valve and initiate a shut-down of the blower.
    e. There shall be three means of shutting down the blower:
        1) Normal Stop: Initiated by pushing the local stop button or remote stop from the MCP. Machine normally goes through a shutdown sequence and stops such that no surging occurs.
        2) Soft Stop Initiated by surge.
        3) Emergency Stop Initiated by:
            a) Pushing EMERGENCY STOP pushbutton.
            b) STOP command from MCP or PCS.
            c) PLC failure.
    f. Blowers shall be able to automatically restart following a plantwide power failure without operator intervention.
    g. In REMOTE control mode, on loss of communications with the PCS or the MCP, the blowers will go through a shutdown sequence. The blowers will need to be restarted manually at the LCP in LOCAL mode, or placed in REMOTE mode and restarted at the MCP.
    h. The blower control, monitoring and protection system shall include the following, as a minimum:
        1) Blower inlet air temperature.
        2) Blower discharge air temperature.
        3) Blower inlet air pressure.
        4) Blower discharge air pressure.
        5) Motor winding temperature.
        6) Bearing temperature.
        7) Shaft vibration.
        8) Air flow.
        9) Speed.
        10) Input power.
12. Provide each blower with the following function and features:
    a. Controls shall be located interior to the blower package. All control power shall be prewired, and derived from the main 480-volt, three-phase power supply to the blower via the 600/480-volt transformer. No additional external wiring connections

shall be necessary for control power. Provide control power transformers as required for lower voltage device and control requirements.

b. The LCP shall be factory assembled and wired such that field wiring shall consist only of connection to panel terminals.
c. All controls and instruments shall fail into a safe condition. The controls shall be designed such that the blower cannot operate unless the controls are energized, nor can they operate with any defective controls.
d. Power supply for bypass valve shall be from the LCP.
e. Surge suppressors shall be provided for “noise” protection and to remove transient peaks across all inductive loads.
f. Provide panel mounted OIT, incorporating manufacturer’s standard functions, controls, alarms, and meters in easy-to-interpret operator interface displays.
g. Provide hardwired EMERGENCY STOP button on panel exterior.

13. LCP Control Interfaces with the MCP. All status, alarms, and blower process variables monitored at the LCP shall be communicated to the MCP, including but not limited to the following items:
    a. Inputs:
        1) Remote START/STOP command.
        2) Remote SPEED command.
    b. Outputs:
        1) Blower status (ON, OFF).
        2) Blower READY status when blower is not running.
        3) Blower fault.
        4) Air flow rate.
        5) Ambient air pressure
        6) Suction and discharge air pressure.
        7) Suction and discharge air temperature.
        8) Motor speed/power/temperature.
        9) Filter differential pressure.
        10) Bearing temperature.
        11) Shaft vibration.
        12) Blow-off valve position feedback.
        13) Other parameters recommended to monitor from remote locations, or to retain for historical trend.

2.5 SOURCE QUALITY CONTROL

A. Factory Testing:
1. Factory tests shall be performed on each blower as a completed package, all cabinet doors shall be closed and losses through inlet filter shall be accommodated for.
2. All furnished blowers and components supplied within this specification shall be tested. Testing of similar size units and components not actually furnished will not be allowed.
3. The blower package manufacturer must submit a factory test procedure for approval. Pre-requisite for scheduling the factory test is an approved test procedure at least 12 weeks prior to scheduling the factory test.
4. The test procedure shall include the completed supplement – 2, Process and Fluid Components and Electrical Power Related Components – Factory Testing Checklists.

5. Upon completion of assembly, provide minimum 6 weeks notification in writing to the Contract Administrator for scheduling the factory test. The Contract Administrator and/or the City will witness the testing. The Contractor shall include in their price all expenses for two of the City's representatives, who will witness the shop testing. The expenses shall include all required airfare, car rentals, taxis, hotel accommodations and meals. If a shop test fails and an extension of time at the factory is required for retesting or a retest is scheduled at a later date, the Contractor shall bear all additional expenses at no additional cost to the City.
6. The blower factory tests shall be witnessed by Contract Administrator. Contract Administrator shall be allowed proper time for inspections and witnessing of shop testing of material and equipment. Proper time shall be defined as the time required to successfully complete the specified factory test.
7. The blower package shall be factory tested for duration not less than 4 hours under varying operating conditions.
8. Each individual blower package including blowoff valve and LCP shall be tested before shipment. The LCP shall be connected to all enclosure instruments, and appurtenances. All start/stop and running sequences and all safety alarm systems shall be tested. The witnessing engineer shall sign the test procedures and results, certifying that the assembled blowers, auxiliaries, blowoff valves, and control panel were tested together, as a system, in the blower manufacturer's shop.
9. Each blower shall be performance tested in accordance with ASME PTC-10 Performance Test Code on Compressors and Exhausters (Type 2) and modified to verify the delivered mass flow measured at the discharge of the blower package. Discharge pressure (delivered pressure) shall be measured downstream of the check valve. Input power is the sum of the input electrical power to the blower system (package). Measure parameters at all design conditions as well as blower minimum and maximum operating conditions. Tests shall be conducted using all components to be installed in the field.
10. A calibrated wattmeter shall measure the electrical input to the blower system. Measured power shall include all losses associated with electrical shaft power, including but not limited to the motor, inverter, drive, cooling system, etc.
11. Net delivered flow rate (capacity) and discharge pressure shall be guaranteed with no negative tolerance. There shall be no tolerances or measuring uncertainties used in the reporting of the test results (i.e., the test results report plus or minus 0 percent tolerance using measured values).
12. Inlet pressure, inlet temperature, inlet humidity, discharge temperature, discharge pressure, and net delivered flow rate shall be recorded for all operating design points outlined within this section.
13. The capacity and all measurements of the blower shall be defined as per Section 4 of the ASME PTC 10 Power Test Code. Air flow rate shall be measured on the discharge side of the blower. Discharge pressure (delivered pressure) shall be measured downstream of the check valve. Input power is the sum of the input electrical power to the blower system (package).
14. All test equipment shall be calibrated and certified by an independent test agency no more than 12 months prior to the test date. Certificates shall show the stability of calibration over a period of at least 1 year per ISO 9001, Paragraph 4.11.
15. Velocity vibration versus frequency levels shall be recorded within 10-1,000 and 10-10,000-Hz frequency.

16. The blower test report shall present computations in exact accordance with Sections 5, 6, and 7 of the ASME PTC-10 Code with the performance curves showing capacity, pressure, and horsepower inputs for each of the flow and pressure conditions.
17. Provide total power consumption calculations for each blower for each specified operating conditions.
18. Test results of the motors and blowers shall be included in the Operations and Maintenance Manual.

B. Master Control Panel Factory Tests:
1. the City and Contract Administrator reserves the right to witness the tests specified herein and to inspect the fabrication procedures at any time during the fabrication the panel.
2. Witnessed panel factory tests shall be conducted per pre-approved factory test plan procedures.
3. Provide 4 weeks' notice, in writing, for the witnessing of the testing.
4. Perform functional tests as follows:
   a. Gather and furnish test information necessary to show conformance to specified requirements.
   b. Manufacturer's Test Representative shall certify test results.
   c. Perform tests on panel(s) actually furnished after construction is complete and final application software is loaded onto all PLCs and OITs.
   d. Simulate interlocks and signals from other connected equipment in order to demonstrate specified operator interface functions and controls.
   e. Provide temporary test software to simulate properly operating motors and valves when actual motors or valves are not connected.
5. Testing shall include, as a minimum:
   a. Inspection for proper construction.
   b. Verification of conformance with OIT standards.
   c. Verification of SCADA remote monitoring and control functions:
      1) Provide test screen for simulating outputs from SCADA and display SCADA monitored points.
   d. Monitoring and control of all connected devices, included those provided by others.
   e. Alarm functions.
   f. Switching logic.
   g. Type 2 power recovery.
   h. All automatic sequences including:
      1) Normal start.
      2) Normal stop.
      3) Controlled shutdown.
      4) Local e-stop.
      5) Remote e-stop.
      6) Type 1 power recovery.
   i. Obtain acceptance of test reports from Contract Administrator prior to shipment of equipment.

2.6 COATINGS

A. All exterior surfaces, except stainless steel, shall be primed and finish coated.

B. Color to be manufacturer's standard.

C. Painting and Coating to be as follows.

Surface Prep.	Paint Material	Min. Coats, Cover
SP 10, Near-White Blast Cleaning	Epoxy Primer—Ferrous Metal	1 coat, 2.5 MDFT
	Polyurethane Enamel	1 coat, 3 MDFT

2.7 ACCESSORIES

A. Equipment Identification Plate: 16-gauge stainless steel with 9.5 mm engraved equipment tag number securely mounted in a readily visible location.

B. Concrete Anchors: Blowers shall be mounted on fixed anchor bolt system designed by blower manufacturer. Concrete anchors shall be in stainless steel 316.

C. Blower enclosure shall be suitable for moving complete unit with a forklift. Provide lifting eyes on all components weighing over 23 kg.

D. Provide touchup paint for field painting. Coating type and color shall match shop paint coating.

E. Tools: Manufacturer shall furnish one set of special tools required for complete assembly or disassembly of blower system components for each type or size of blower specified, together with a neat metal box (or boxes) for the same. The tool kit(s) shall be sufficiently complete to permit normal repair and maintenance of all equipment furnished.

PART 3 EXECUTION

3.1 INSTALLATION

A. The Contractor shall install the blowers in accordance with the manufacturer's written instructions and as directed on Site by the manufacturer's representative. The Contractor shall be responsible for coordinating related items, not covered in this section of the specifications, such as piping, fittings, additional valves, supports, motor controls and wiring.

B. The blower supplier shall supply blower packages and MCP shipped completely pre-assembled. Only the electrical connections, pipe connections and installation of loose shipped accessories shall be performed on Site by the Contractor.

C. The design of the gearless turbo blower system and layout depicted in the Contract Drawings is based on both "common" and "separate" inlets for process and enclosure air cooling. There may be other minor design and configuration differences that have impact on piping length and integration. Differences in design shall be coordinated and implemented by the General Contractor. They shall not be considered a change of scope to this Contract.

D. All blower package and installation deficiencies must be corrected by the blower system manufacturer prior to startup or testing.

E. Contractor shall furnish and install anchor bolts per the manufacturer's instructions and calculations.

3.2 FIELD QUALITY CONTROL

A. In addition to any testing herein, perform all testing for this product or system consistent with the requirements of Section 01 43 33, Contractor Field Services, the applicable codes, Section 01 91 14, Equipment Testing and Facility Startup, and the manufacturers' current Quality Assurance program.

B. Provide qualified, factory-trained representatives of the manufacturer, who have complete knowledge and experience in the proper installation, startup and operation of the equipment, inspect the final installation and assist the Contractor with all field functional tests of the equipment.

C. Field Inspection and Functional Test Phase:
   1. Functional testing shall be conducted on each blower set after the installation of the blowers and all appurtenances.
   2. The manufacturer will provide, calibrate, and install all temporary gauges and meters, shall make necessary tapped holes in the pipes and install all temporary piping and wiring required for the functional tests. Written test procedures will be submitted to Contract Administrator for approval a minimum of 60 days prior to testing.
   3. Contractor shall schedule the field inspection and functional test with the full knowledge and consent of Contract Administrator. Conduct a functional test of each blower under the full range of operation. Field inspection and functional acceptance test shall demonstrate that, each unit:
      a. Has not been damaged by transportation or installation.
      b. Has been properly installed.
      c. Has no mechanical defects.
      d. Is in proper alignment.
      e. Has been properly connected.
      f. Has fully functional instrumentation that is properly calibrated and set.
      g. Will start, run, and stop in the prescribed manner.
      h. Will run through entire range of specified pressure and flow.
      i. Surge control dynamic adjustment, protection and shutdown.
      j. Has the proper shutdown sequence of standard stop, soft stop, and emergency stop.
      k. Is free of overheating of any parts.
      l. Is free of objectionable vibration and noise as specified.
      m. Is free of overloading of any parts.
      n. Shall operate as specified with control system

D. Performance Testing: Following the functional test phase, field run test shall be performed as follows:
   1. Conduct a minimum of 4-hour field run test on each blower including instrumentation, controls, and valves. The test shall demonstrate that the blowers will be operated across the entire range of specified pressure and flow while in remote with control from the MCP. The test shall be conducted with the IFAS basin full of mixed liquor at normal operating levels.

2. Conduct a minimum of 2-hour field run test on multiple scenarios where various number of blowers are operating. The test shall demonstrate that the blowers are able to sequence on and off as lead and lag systems as controlled by the MCP. The test shall also demonstrate the ability of the MCP to control the header pressure effectively during multiple airflow requirement scenarios.
3. Conduct demonstration of each blower's ability to automatically set to a blower READY status following a plantwide power failure without operator interface, provided the blower PLCs can automatically reset all the faults and alarms in the PLC.
4. A Field Startup Log shall be submitted to the Contract Administrator on completion of each test which records the blower model number, blower serial number, test date, beginning test time, ending test time, motor horsepower, motor speed, amperage draw, and all of the key operating parameters. Under actual operating conditions Table 1 must be completed to demonstrate proper range of operation of each blower. Field run test results shall be certified by the manufacturer's representative and witnessed by the Contract Administrator.

Table 1
Field Verification Results

Point	Input Power (kW)	Discharge Mass Flow (Ncfm)	Discharge Pressure (Kpag)	Ambient Temp. (degrees C)	Discharge Temp. (degrees C)	Relative Humidity (%)
1						
2						
3						
4						
5						
6						
7						
8						
9						

5. For any units that do not operate properly, corrective measures shall be taken by the Manufacturer at no additional expense to the City.
6. Blowers packages failing to meet the specifications to the satisfaction of the Contract Administrator shall be corrected and re-tested by the Manufacturer. If a package blower fails the second test, the unit will be rejected and the Manufacturer shall furnish a unit which shall perform as specified.

3.3 TRAINING

A. After successful completion of required function testing, manufacturer shall provide field and classroom training to operations and maintenance staff.

3.4 MANUFACTURER'S SERVICES

A. Procedures: Per Section 01 43 33, Contractor Field Services.

B. The blower manufacturer shall provide a factory-trained representative at the Site for the specified quantity and duration of the following activities. Specified durations do not include travel time to or from the Project Site. Provide written documentation for check out including who performed the work, when performed, what was the final setting or tolerance and who witnessed the final settings. The manufacturer's services shall include following:
   1. 5 person-days in one trip for installation assistance and inspection of the Contractor's activities during installation.
   2. 5 person-days in one trip for functional and performance testing and completion of Manufacturer's Certificate of Proper Installation.
   3. 3 person-days for training in three trips. Provide a minimum of 4 hours of training per session on the gearless turbo air blowers. Conduct the training sessions as scheduled by the City, to accommodate the shift schedules of operation and maintenance staff.
   4. 2 person-day for post-startup review of operations. After the equipment has been placed into operation for a minimum of 45 calendar days, the equipment manufacturer shall provide one 8-hour per day of follow-up services (inspection of equipment, review of operation, additional training if required) for equipment inspection. Post-startup services to be scheduled by the City.
   5. During the Functional Test, the blower manufacturer's Master Control Panel software programmer shall be onsite for a minimum of 10 working days to coordinate the testing of the blower system, each blower, the blower Master Control Panel, and coordination with the PCS. At the end of the 10-day period, if the blower programming has not completed the functional testing, as required by approved Functional Test submittal, then an additional 5-day testing shall be coordinated and provided.
   6. Performance Test to be verified by the PCS Integrator. Comply with Section 01 91 14, Equipment Testing and Facility Startup. During the blower Performance Test, the blower manufacturer's Master Control Panel software programmer shall be onsite for a second 5-day testing and commissioning period. At the end of the 5-day period, if the blower programming has not completed the process performance testing requirements, as required by approved Performance Test Submittal, then a second 5-day testing shall be coordinated and provided.

3.5 SUPPLEMENT

A. The supplement listed below, following "End of Section," is a part of this Specification:
   1. Gearless Turbo Blowers 1, 2, 3, 4, 5 and 6 Equipment Data Sheets.
   2. Process and Fluid Components and Electrical Power Related Components -- Factory Testing Checklists.

END OF SECTION

CH2MHILL

EQUIPMENT DATA SHEET CONTRACT ADMINISTRATOR: CH2MHILL

FACILITY: City of Winnipeg SEWPCC Upgrading/Expansion Project

NAME: Gearless Turbo Blowers 1, 2, 3, 4, 5 and 6

QUANTITY: Six

EQUIPMENT TAG NO.: B-R201, B-R202, B-R203, B-R204, B-R205, and B-R206

OPERATING CONDITIONS:

Air, ambient temperatures extreme range from minus 35 degrees C to plus 40 degrees C.

Relative humidity of 10 percent to 90 percent with short periods of 100 percent relative humidity due to fog or rain.

Operating temperatures below freezing and high humidity periodically lead to conditions of hoar frost in this location that shall be taken into consideration in blower accessory performance whether part of the blower package or part of the general package.

Blower units may be exposed to extreme ambient temperatures described above for short periods of time. All components shall be rated for continuous operation across the range of ambient temperatures and humidities.

Blowers must be able to cool themselves adequately using air from outside the Blower Room.

BLOWER CAPACITY AND DESIGN REQUIREMENTS:

A. Aeration blowers shall meet the following design criteria:

Total Number of Blowers	6
Method of Operation	In parallel, intermittent
Blower Type	Gearless Turbo
Drive Type	Direct
Design Site Elevation/Inlet Pressure	230 m/ (98 kPa(a), 14.2 psi(a))
Maximum Blower Inlet Pressure Loss (Ductwork, Filter and Inlet Manifold)	2 kPa (0.29 psi)
Design Blower Capacity (Normal and Standard Conditions are at 20 Degrees C, 101.325 kPa (14.7 psi), and 36% relative humidity)	143.8 Nm^3/min 5,078 scfm
Design Discharge Pressure	77 kPag (11.15 psig)
Design Pressure Differential	79 kPag (11.45 psig)
Discharge Flange (ANSI 150 lb bolt pattern)	350 to 400 mm

Primary Process Air Source	Ducted Inlet
Primary Enclosure Cooling Air Source	Ducted Inlet
Inlet Flange (ANSI 150 lb bolt pattern)	500 mm
Maximum Motor Horsepower	298 kW (400 hp)
Available Power Voltage	600 V
Available Power Phase/Frequency	3 Phase/ 60 Hz
Maximum Noise at 1.52 m (5 feet)	81 dbA
Maximum Width of Unit (including flanges as applicable)	1.5 m
Maximum Length of Unit (including flanges as applicable)	2.8 m
Allowable vibration level	< 1 mm/sec

B. Condition 1 (Summer) – Inlet condition at inlet flange: 40 degrees C, 90 percent relative humidity, and 98 kPa(a) 14.2 psia ambient barometric pressure.

C. Condition 2 (Winter) – Inlet condition at inlet flange: minus 35 degrees C, 10 percent relative humidity, and 98 kPa(a) 14.2 psia ambient barometric pressure.

D. Blower continuous duty design rating at specified Summer and Winter Conditions:

Operating Design Points	**1**	**2**	**3**	**4**	**5**
Total Flow Rate to the System (Nm^3/min)	338.5	428.5	465.3	567.2	719
Numbers of Blowers Operating	2 - 3	3	3-4	4-5	5
Maximum System Wire to Air Power (kW)	590	720	810	985	1210
Maximum System Wire to Air Power per blower (kW) [depending on the number of blowers operating noted above]	196.7 - 295	240	202.5 - 270	197 – 246.3	242

Process and Fluid Components and Electrical Power Related Components
-- Factory Testing Checklists

1. Process and Fluid Components

		Included in Performance Boundary		
		Included in Test	Determine by Calculation	Not Applicable
a	Inlet filter			
b	Inlet silencer			
c	Discharge silencer			
d	Inlet isolation valve			
e	Throttling valve			
f	After cooler			
g	Misc. pipe and fittings			
h	Inlet air cooler			
i	Discharge check valve			
j	Discharge isolation valve			
k	Enclosure doors or panel openings			
l	Estimated system inlet press drop			
m	Blow-off valve			
n	Blow-off silencer			
o	Additional components not listed shall be included as forming the blower package.			

2. Electric Power Related Components

		Included in Performance Boundary		
		Included in Test	Determine by Calculation	Not Applicable
a	Drive Motor			
b	Motor Cooling Fan(s)			
c	Magnetic Bearing and Controller			
d	Bearing cooling fan(s)			
e	Coolant Pumps			
f	Lubrication Pumps and Accessories			
g	Heat Exchanger Fans			
h	Package Cooling Fan			
i	VFD			
j	VFD Line Side Power conditioning Equipment			
k	VFD Load Side Power conditioning Equipment			
l	Eddy Current or Variable Speed Clutch			
m	Operation Control Panel(s)			

		Included in Performance Boundary		
		Included in Test	Determine by Calculation	Not Applicable
n	Power/Isolation Transformers and Power Supplies			
o	Power Conditioner			
p	Blower and Motor Cooling			
q	VFD Cooling			
r	Electronics compartment A/C			
s	Additional components not listed shall be included as forming the blower package.			

SECTION 43 12 03

ROTARY LOBE AIR BLOWERS

MAJOR EQUIPMENT AND COMPONENT NUMBERS

ID No.	Equipment Description
B-G353	Grit Blower
B-G354	Grit Blower

PART 1 GENERAL

1.1 REFERENCES

A. The following is a list of standards which may be referenced in this section:
   1. American Bearing Manufacturers Association (ABMA).
   2. American Gear Manufacturers Association (AGMA).
   3. American Society of Mechanical Engineers (ASME):
      a. B16.1, Grey Iron Pipe Flanges and Flanged Fittings Classes 25, 125, and 250.
      b. B16.5, Pipe Flanges and Flanged Fittings NPS 1/2 Through NPS 24 Metric/Inch Standard.
   4. American Society for Testing and Materials (ASTM):
      a. A48/A48M, Standard Specification for Gray Iron Castings.
      b. A395/A395M, Standard Specification for Ferritic Ductile Iron Pressure-Retaining Castings for Use at Elevated Temperatures.
   5. Electrical Equipment Manufacturers Advisory Council (EEMAC):
      a. M1-7 Motors and Generators.
   6. National Electrical Manufacturer's Association (NEMA):
      a. MG-1 Motors and Generators.
   7. Occupational Health and Safety Act (OHSA).
   8. 2010 National Building Code of Canada, with 2011 Manitoba Amendments (NBC).

1.2 DEFINITIONS

A. Shaft Power: Standard curve power required corrected for pressure and temperature at inlet conditions.

B. im^3/h: Volume of air in cubic meters per hour entering blower at specified inlet conditions.

C. sm^3/h: Volume of air in cubic meters per hour at standard conditions.

D. Standard Conditions: 20 degrees C, 101.3 kPa (absolute), and 36 percent relative humidity.

E. Discharge Pressure: Gauge pressure at blower discharge flange at rated capacity referenced to Job Site barometric pressure.

F. Overall Efficiency: Total combined efficiency of motor, drive, and blower.

1.3 SUBMITTALS

A. Shop Drawings:
1. Make, model, weight, and horsepower of each equipment assembly.
2. Manufacturer's catalog information, descriptive literature, dimensional layouts, specifications, and identification of materials of construction, for all items specified.
3. Performance data including:
   a. Blower curves showing pressure, capacity, speed, power demand, and overall efficiency over entire operating range from shutoff to maximum capacity.
   b. Indicate separately pressure, capacity, speed, power demand, and overall efficiency at guarantee point.
   c. Show performance data at standard conditions and also at actual summer and winter design conditions corrected to Site elevation.
   d. Furnish for each different size or type of equipment to be supplied.
4. Details of appurtenances.
5. Details of sound enclosure including calculated noise attenuation.
6. Detailed drawings showing the equipment fabrications and interface with other items. Include dimensions, size, and locations of connections to other work, and weights of associated equipment.
7. External utility requirements such as air, water, power, drain, etc., for each component.
8. Functional description of internal and external instrumentation and controls to be supplied including list of parameters monitored, controlled, or alarmed.
9. All applicable submittals in Section 40 99 90, Packaged Control Systems.
10. Shop and field painting systems proposed: Include manufacturer's descriptive technical catalog literature and specifications.

B. Information Submittals:
1. Manufacturer's Certificate of Compliance: Commercial products, including specific reference to meeting maximum noise level requirements, and painting/coating system(s).
2. Test results, reports, and certifications.
3. Special shipping, storage and protection, and handling instructions.
4. Manufacturer's Certificate of Proper Installation in accordance with Section 01 43 33, Contractor Field Services.
5. Operation and Maintenance Data: As specified in Section 01 78 23, Operation and Maintenance Data.
6. Service records for maintenance performed during construction.
7. Submit written certification from Professional Engineer licensed in Province of Manitoba stating that support systems, anchorage, and equipment have been designed according to requirements of NBC for post-disaster structures, at time of Shop Drawing submittals.

1.4 EXTRA MATERIALS

A. Furnish, tag, and box, for each different blower size, the following spare parts and special tools for shipment and long-term storage:

Item	Quantity
Drive belts	One complete set
Bearings	One complete set
Seals and gaskets	One complete set
Filters	Two
Any special tools required for routine maintenance	One complete set

B. Delivery: In accordance with Section 01 61 00, Common Product Requirements.

PART 2 PRODUCTS

2.1 GENERAL

A. Provide skid-mounted packaged blower system including, but not limited to, compressors, motors, belt drives, drive guards, baseplates, vibration isolators, supports, inlet silencers, discharge silencers, relief valves, flexible connectors, noise enclosures, control panels, instrumentation, spare parts, air filters, and miscellaneous appurtenances as necessary for a complete operating system.

B. Where possible, provide end products of one manufacturer in order to achieve standardization for appearance, operation, maintenance, replacement, and manufacturer’s service.

C. Design equipment with due regard to safety of operation, accessibility, and durability of parts, and compliance with applicable OHSA, provincial, and local safety regulations.

D. Design equipment, anchorage, and support systems for vertical and lateral loading in accordance with NBC.

2.2 MANUFACTURERS

A. Materials, equipment, and accessories specified in this section shall be products of:
   1. Gardner Denver/Robuschi.
   2. Aerzen.
   3. Hibon.

2.3 CONDITIONS OF SERVICE

A. Site Conditions:
   1. Elevation: 235 m.
   2. Barometric Pressure: 98.5 kPa absolute.

B. Inlet Conditions (at blower inlet flange):

	Summer	**Winter**
Temperature (degrees C)	40	minus 35
Pressure (kPa absolute)	95.1	95.1
Relative Humidity (%)	90	10

2.4 PERFORMANCE REQUIREMENTS

A. Design rating for continuous duty at specified inlet conditions:

	B-G353, B-G354	
Service	Grit tanks aeration	
Design Capacity (sm^3/h)	765	
Inlet Pressure (kPag)	minus 3.4	
Pressure Rise (kPa)	55.2	
Discharge Pressure (kPag)	51.8	
Minimum Overall Efficiency at Design Capacity (%)	60	
Maximum Shaft Power at Design Capacity (kW)	25	
Maximum Temperature Rise at Design Capacity (degrees C):	65	
Maximum Blower Speed (rpm)	3,500	
Drive Type	V-belt	
Drive Speed Control	Constant speed	

B. Maximum required shaft power at design capacity and pressure rise shall not exceed 90 percent of motor rated (nameplate) power, excluding motor service factor, under all inlet conditions specified.

C. Maximum Sound Pressure Level: 85 dBA at 1.0 m, free field, with inlet and discharge silencers and sound enclosure.

2.5 EQUIPMENT DESCRIPTION

A. Rotary lobe, oil-free positive displacement type, belt driven by horizontal electric motor.

B. Casing:
   1. One-piece construction, ASTM A48/A48M Class 30B close-grain cast iron, with integrally-cast ribs to prevent distortion at specified operating conditions. Separate head plates of cast iron.

2. Tapped and plugged openings for casing and bearing drains.
3. Integral pulsation dampener to reduce air pulsations in discharge piping.
4. Inlet and Outlet Connections: ASME B16.1 Class 125 flanges, integrally cast as part of casing.

C. Rotors and Shafts:
1. Each rotor/shaft assembly shall be integrally cast from high-strength ductile iron, ASTM A395/A395M Type 60-45-15 or equal, having minimum tensile strength of 414 MPa.
2. Two- or three-lobe involute type, rotating in opposite directions in common casing without rubbing, liquid seals, or lubrication.
3. Positioned by timing gears to maintain proper clearances.
4. Statically and dynamically balanced by removing metal from rotor body.

D. Timing Gears:
1. Accurately machined and carborized steel helical or spur gears hardened to 58-62 Rockwell and manufactured to comply with AGMA.
2. Gears mounted on rotor shafts with tapered fit and secured by locknuts.

E. Bearings:
1. Each rotor/shaft assembly shall be supported by antifriction type roller bearings sized for minimum ABMA L10 life of 100,000 hours.
2. Drive end bearings shall be fixed to control axial location of rotor/shaft assembly within casing.
3. Bearings and gears shall be oil lubricated by a splash type lubrication system on both ends of blower.
4. Provide each bearing with positive lip type oil seal designed to prevent lubricant from entering air stream, and labyrinth seal on each shaft designed to reduce air leakage at point where shaft extends through head plate of blower casing.
5. Make further provision to vent area between the two sealing systems to atmosphere to relieve excessive pressure on seals.

F. Belt Drive:
1. V-belt drive with automatic belt tensioning system.
2. Minimum service factor of 1.4 times BHP under maximum design load conditions.
3. Designed not to exceed allowable overhung load limits of blower and motor.
4. Provide belt guard complying with OHSA regulations.

G. Motor:
1. Squirrel-cage ac induction type, meeting requirements of Section 26 20 00, Low-Voltage AC Induction Motors, and as specified herein.
2. Suitable for overhung belt drive.
3. Refer to Motor Data Sheet following End of Section for additional motor requirements.

H. Blower Support:
1. Fabricated steel baseplate, combined with discharge silencer, to support blower, motor, and appurtenances, and suitable for mounting on concrete equipment pad as shown on Drawings.

2. Designed by blower manufacturer and reinforced to withstand anticipated loadings of blower, motor, inlet and discharge silencers, and associated piping.
3. Provide vibration isolators to limit transmission of vibration to anchor points at floor.

I. Inlet Filter/Silencer and Discharge Silencer:
1. Designed specifically to reduce pulsation noise from rotary lobe blowers.
2. For timing gear speeds below transition speed, use multi-chambered reactive type silencer. For timing gear speeds at or above transition speed, use multi-chambered reactive and absorptive type silencer packed with hair-felt packing.
3. Provide inlet silencer with integral air filter.
4. Inlet/Outlet Air Velocity: 1,675 m/min maximum.
5. Pressure Loss: 150 mm WC maximum.
6. Provide inlet silencer with minimum 150 mm diameter flanged inlet for connection to air supply header as shown on Drawings.
7. Provide discharge silencer with minimum 100 mm diameter flanged outlet connection to air discharge header as shown on Drawings.

J. Inlet and Discharge Flexible Connectors:
1. Pressure spool, reinforced molded EPDM, single arch, expansion joint type with ASME B16.5 Class 125 flanged ends and galvanized retaining rings.
2. Operating Temperature Rating: 120 degrees C minimum.
3. Provide for each blower package at inlet and outlet flanges.
4. Thrust restraint control rods.
5. Manufacturers and Products:
   a. Mercer; Series 500.
   b. General Rubber; Style 1101.
   c. Or approved equal in accordance with B8.

K. Discharge Check Valve:
1. Dual plate, metal-hinged, wafer type for each blower; installed in blower discharge piping, suitable for mounting between two ASME B16.5 Class 150 flanges.
2. Type 316 stainless steel body and valve plates, shaft, and spring, Viton seal.
3. Manufacturers and Products:
   a. Cameron; Techno Style 5051.
   b. Crane; Duo-Chek Style G.
   c. Or approved equal in accordance with B8.

L. Safety Relief Valve:
1. Spring-loaded type, for each blower, sized by blower manufacturer.
2. Sized to relieve entire discharge flow without overloading blower.
3. Suitable for temperatures up to 120 degrees C.
4. Set minimum 13.8 kPa above maximum operating discharge pressure.
5. Mounted on discharge silencer.

M. Sound Enclosure:
1. Provide engineered sound enclosure to completely enclose each blower to limit overall sound pressure level to specified performance requirement.
2. Type 304 stainless steel panels with high-density polyurethane noise dampening material.

3. Panels shall be hinged or easily removable to provide access for performing routine blower maintenance and replacing air filter.
4. Provide each enclosure with separate, dedicated ventilation fan to limit temperature within enclosure to not more than 6 degrees C above ambient temperature. Power supply to fan shall be 120V ac, single phase, obtained from 600V ac, 3-phase power supply to each blower package. Operation of fan shall be controlled by blower package control system.

2.6 ELECTRICAL COMPONENTS AND ACCESSORIES

A. General: Provide all necessary electrical components and wiring for a complete, functional system. Electrical components shall be provided in accordance with requirements of Division 26, Electrical.

B. Wiring: All wiring shall meet requirements of Section 26 05 21, Wires and Cables (0-1000V) - Electrical, and CEC. All insulation shall be rated 600V, minimum. Twisted shielded pair cable shall be used for all low-voltage (24V dc) signals.

C. Electrical Raceways: All electrical wiring shall be installed in conduit meeting requirements of Section 26 05 34, Conduits, Conduit Fasteners, and Conduit Fittings. All raceways shall be installed in accordance with Section 26 05 34, Conduits, Conduit Fasteners, and Conduit Fittings, and CEC.

D. Motors: Provide squirrel-cage AC induction motors meeting requirements of Section 26 20 00, Low-Voltage AC Induction Motors, and as specified herein.

E. Electrical Responsibilities: Manufacturer/supplier shall be responsible for all electrical conduits, wiring, and electrical appurtenances located on equipment, including terminal junction boxes for power and control circuits.

F. Motor Starters: In accordance with Section 26 29 10, Motor Starter to 600 V, supplied by equipment manufacturer and factory installed, connected, configured, and tested inside package control panels.

2.7 INSTRUMENTATION AND CONTROLS

A. General:
1. Provide all controls and control panels in accordance with requirements of Section 40 99 90, Packaged Control Systems.
2. Provide complete and functional system, including interfaces with plant Process Control System (PCS).
3. Provide full-voltage starters in package control panels for package system components. Motor starters shall be equipped with electronic overloads in all three phases. Overloads shall be resettable without opening panel.
4. Segregate analog wiring in dedicated raceways.
5. Control components shall operate on 120V ac power.
6. Provide instrumentation in accordance with Section 40 99 90, Packaged Control Systems, unless specified otherwise. Provide industrial grade instruments suitable for intended service and environment.

7. Instrumentation and controls specified herein are minimum requirements. Equipment manufacturer shall provide additional components and features necessary to achieve intended function and provide safe and reliable operation of equipment supplied.

B. Control Panels:

Panel No.	Name	NEMA 250 Rating	Enclosure Material	Mounting
LCP-G353	Grit Blower B-G353 Control Panel	4	Steel	Free-standing
LCP-G354	Grit Blower B-G354 Control Panel	4	Steel	Free-standing

1. Main disconnect switch for 600V power supply, with lockable handle and interlocked with panel door.
2. Control power transformer.
3. Overload and over-current protection.
4. Programmable logic controller (PLC) for all blower functions.
5. Power Supply to Panels: Single 600V, 3-phase, 60 Hz supply to each panel. Power to all motors and instruments shall be supplied from associated panel.
6. Operator Controls and Indicators:
   a. Operator interface terminal (OIT).
   b. LOCAL/OFF/REMOTE selector switch.
   c. Blower START and STOP pushbuttons.
   d. EMERGENCY STOP push button.
   e. System RESET pushbutton.
   f. REMOTE Mode indicating light.
   g. Blower ON indicating light.
   h. System FAULT indicating light.
   i. Suction Pressure LOW indicating light.
   j. Discharge Pressure HIGH indicating light.
   k. Discharge Temperature HIGH indicating light.
   l. Enclosure Temperature HIGH indicating light.
   m. Filter Differential Pressure HIGH indicating light.
   n. Oil Level LOW indicating light.
   o. Oil Temperature HIGH indicating light.
7. External Interfaces:
   a. Provide all required inputs and outputs for interfacing with blower motor and vendor-supplied instruments.
8. Plant PCS Interface:
   a. Provide clearly labeled terminals for interface to plant PCS, including but not limited to:
      1) Dry contact with less than 2 mA minimum switching current at 24 VDC for plant PCS discrete input signals:
         a) “Remote Mode”.
         b) “Blower Running”.
         c) “System Ready”.

d) “System Fault”.
e) “Filter Differential Pressure High”.

2) 24 VDC relay coil for plant PCS discrete output signals:
a) “Start” command.
b) “Stop” command.

3) Provide Modbus TCP interface to plant PCS for monitoring all statuses, set-points, and alarms, including but not limited to:
a) Discharge pressure.
b) High discharge temperature fault.
c) High discharge pressure fault.
d) Low suction pressure fault.
e) High oil temperature fault.

9. Functional Requirements:
a. When LOCAL/OFF/REMOTE selector switch is in LOCAL position, blower shall be controlled manually at LCP. In REMOTE position, blower shall be automatically controlled by LCP and plant PCS as follows:
1) Duty and standby blower will be assigned at plant PCS. Plant PCS will issue “Start” command to duty blower.
2) Upon receipt of “Start” command from plant PCS, blower shall start and run continuously.
3) Upon receipt of “Stop” command from plant PCS, blower shall stop immediately.

b. “System Ready” indication shall signify blower is ready for normal operation and shall include following conditions:
1) LOCAL/OFF/REMOTE selector switch at LCP is in REMOTE position.
2) Absence of any “System Fault” condition.

c. Upon any of the following conditions, blower shall immediately stop and alarm shall be activated at LCP, in both LOCAL and REMOTE modes:
1) Motor overload.
2) Low suction pressure.
3) High discharge pressure.
4) High discharge temperature.
5) Low oil level.
6) High oil temperature.

d. Provide timers and relays to override low suction pressure during blower starting.

e. In event of “System Fault” (any abnormal condition that stops operation of blower), operation of blower shall be disabled until cause of fault is corrected and system RESET pushbutton at LCP is pressed.

f. When EMERGENCY STOP pushbutton is pressed, blower shall stop immediately in both LOCAL and REMOTE modes. Operation of blower shall be disabled until system RESET pushbutton is pressed.

g. In event of power supply failure while blower is operating, blower shall automatically resume operation upon restoration of power supply. In event of power supply failure during system fault, system shall remain in fault condition upon restoration of power supply.

C. Instrumentation:
   1. Provide instrumentation for each blower for monitoring and control of blower operation, including but not limited to:
      a. Filter high differential pressure switch.
      b. Suction pressure gauge.
      c. Suction low pressure switch.
      d. Discharge pressure gauge.
      e. Discharge high pressure switch.
      f. Discharge temperature gauge.
      g. Discharge high temperature switch.
      h. Oil level switch.
      i. Oil temperature switch.

2.8 ACCESSORIES

A. Lifting Lugs: Provide suitably attached for all equipment assemblies and components weighing over 45 kg.

B. Equipment Anchor Bolts: Type 316 stainless steel, sized by equipment manufacturer, and as specified in Section 05 50 00, Metal Fabrications (Basic).

C. Equipment Identification Plates: In accordance with Section 40 05 53, Identification Labels for Equipment, Fabricated Tanks, Valves and Piping Systems.

2.9 FABRICATION

A. Factory prepare, prime, and finish coat exposed metal surfaces of equipment in accordance with manufacturer’s standard coating system.

2.10 SOURCE QUALITY CONTROL

A. Factory Inspections: Inspect all equipment supplied for required construction, electrical connection, and intended function.

B. Factory Tests and Adjustments:
   1. Test all equipment actually furnished.
   2. Functional Tests:
      a. Perform manufacturer’s standard production tests.
      b. Dynamically balance rotating parts of each blower and driving unit before final assembly.
   3. Performance Test:
      a. Test each blower for minimum of 1 hour after stabilization at operating conditions near performance ratings, for mechanical integrity and flow performance.
      b. Perform at or above specified pressure rise.
      c. Tolerance on Flow: Plus or minus 4 percent, after correction to rated conditions.
      d. Slip Test:
         1) Perform in accordance with manufacturer’s established criteria.
         2) Describe the testing configuration.
         3) Document operating conditions, temperatures, pressures, blower speed, etc.

4) Complete slip calculations at test conditions.
e. Measure power consumption using calibrated wattmeter.
f. Test Report: Confirm capacity and power, complete with data and calculations used in test.
4. Motor Test: In accordance with Section 26 20 00, Low-Voltage AC Induction Motors.

PART 3 EXECUTION

3.1 DELIVERY, STORAGE, AND HANDLING

A. In accordance with Section 01 61 00, Common Product Requirements.

3.2 INSTALLATION

A. In accordance with manufacturer's written instructions.

B. Anchor Bolts: Place using templates furnished by manufacturer and in accordance with Section 05 50 00, Metal Fabrications (Basic).

3.3 FIELD QUALITY CONTROL

A. Functional Tests:
1. Conduct on each blower.
2. Test complete assemblies for correct rotation, proper alignment and connection, and quiet operation.
3. Vibration Test:
a. Test with units installed and in normal operation.
b. Equipment shall not develop amplitudes of vibration in excess of manufacturer's recommended limits.
c. If unit exhibits vibration in excess of limits, adjust or modify as necessary. Units which cannot be adjusted or modified to conform as specified shall be replaced at no additional cost to the City.

B. Performance Test:
1. Conduct on each blower.
2. Perform under actual or approved simulated operating conditions.
3. Test for continuous 3-hour period without malfunction.
4. Perform with Contract Administrator present.
5. Test Log: Upon completion of test, record the following:
a. Flow measured by plant instrumentation and storage volumes.
b. Blower inlet and discharge pressures.
c. Driving motor voltage and amperage measured for each phase.
6. Adjust, realign, or modify units as required and retest.

3.4 MANUFACTURER'S SERVICES

A. Manufacturer's Representative: Present at Site or classroom designated by the City, for minimum person-days listed below, travel time excluded:
   1. One person-day for installation assistance and inspection.
   2. One person-day for functional and performance testing and completion of Manufacturer's Certificate of Proper Installation.
   3. Two person-days for pre-startup classroom or Site training.
   4. One person-day for facility startup.
   5. One person-day for post-startup training of the City's personnel. Training shall not commence until an accepted detailed lesson plan for each training activity has been reviewed by the City and Contract Administrator.

B. See Section 01 43 33, Contractor Field Services and Section 01 91 14, Equipment Testing and Facility Startup.

3.5 SUPPLEMENTS

A. The supplements listed below, following "End of Section," are part of this Specification:
   1. Motor Data Sheet.

END OF SECTION

MOTOR DATA SHEET
GRIT BLOWERS B-G353, B-G354

Project: City of Winnipeg SEWPCC Upgrading/Expansion Project

Process/Facility: Headworks

Service: Grit Tanks 3 and 4 Aeration

Equipment Name: Grit Blowers

Equipment Tag Number(s): B-G353, B-G354

Type: Squirrel-cage induction meeting requirements of NEMA MG 1.

Manufacturer: For multiple units of same type of equipment, furnish motors and accessories from single manufacturer.

Hazardous Location: ☐ Furnish motors for hazardous (classified) locations that conform to UL 674 and have an applied UL listing mark.

Motor Size (kW): 22.4 ☐ Min. ☐ Max.	Guaranteed Minimum Efficiency at Full Load (%): 93.0
Voltage: 575	Guaranteed Minimum Power Factor at Full Load (%): 85.1
Phase: 3	Service Factor (at rated max. ambient temperature): ☐ 1.0 ☒ 1.15
Frequency (Hz): 60	Enclosure Type: TEFC
Synchronous Speed (rpm): 1800 max.	Mounting Type: ☒ Horizontal ☐ Vertical
☒ Constant Speed	Vertical Shaft: ☐ Solid ☐ Hollow
☐ Two-speed Speed (rpm): Slow _____ Fast _____	Vertical Thrust Capacity (N): Up _____ Down _____
☐ Multi-speed Speed (rpm): Min. _____ Max. _____	☐ Adjustable Speed Application (inverter duty rated) In accordance with Section 26 29 23, Variable Frequency Drives. Operating Speed Range: _____ to _____ % of rated speed
Variable Speed Load Classification: ☐ Variable Torque ☐ Constant Torque ☐ Constant Power	☐ Thermal Protection: _____ ☐ Space Heater: _____ volts, single phase ☒ Oversize main terminal (conduit) box for motors ☒ Terminal for connection of equipment grounding wire in each terminal box
Winding: ☒ One ☐ Two	

ADDITIONAL REQUIREMENTS

☒ In accordance with Section 26 20 00, Low-Voltage AC Induction Motors.

SECTION 43 21 13.13

SCREW-INDUCED FLOW CENTRIFUGAL PUMPS

EQUIPMENT AND COMPONENT NUMBERS

ID No.	Equipment Description
P-K251	HRC Waste Sludge Pump
P-K252	HRC Waste Sludge Pump
P-S181	Sodium Bisulphite Dispersion Pump 1
P-S182	Sodium Bisulphite Dispersion Pump 2
P-S216	RAS Pump
P-S217	RAS Pump
P-S218	RAS Pump

PART 1 GENERAL

1.1 REFERENCES

A. The following is a list of standards that may be referenced in this section:
   1. American Bearing Manufacturers Association (ABMA).
   2. American Iron and Steel Institute (AISI).
   3. American Society for Testing and Materials (ASTM):
      a. A48/A48M, Standard Specification for Gray Iron Castings.
      b. A276/A276M, Standard Specification for Stainless Steel Bars and Shapes.
      c. A436, Standard Specification for Austenitic Gray Iron Castings.
      d. A532/A532M, Standard Specification for Abrasion-Resistant Cast Irons.
      e. A743/A743M, Standard Specification for Castings, Iron-Chromium, Iron-Chromium-Nickel, Corrosion Resistant, for General Application.
   4. American Society of Mechanical Engineers (ASME):
      a. B16.1, Grey Iron Pipe Flanges and Flanged Fittings Classes 25, 125, and 250.
      b. B16.5, Pipe Flanges and Flanged Fittings NPS 1/2 Through NPS 24 Metric/Inch Standard.
      c. B16.47, Large Diameter Steel Flanges NPS 26 Through NPS 60 Metric/Inch Standard.
   5. Hydraulic Institute (ANSI/HI):
      a. 1.1-1.2, Rotodynamic Centrifugal Pumps for Nomenclature and Definitions.
      b. 9.6.4, Rotodynamic Pumps for Vibration Measurements and Allowable Values.
      c. 14.6, Rotodynamic Pumps for Hydraulic Performance Acceptance Tests.
   6. Institute of Electrical and Electronics Engineers (IEEE): 112, Standard Test Procedure for Polyphase Induction Motors and Generators.
   7. International Organization for Standardization (ISO): 10816-3, Mechanical vibration - Evaluation of machine vibration by measurements on non-rotating parts – Part 3: Industrial machines with nominal power above 15 kW and nominal speeds between 120 r/min and 15000 r/min when measured in situ.
   8. National Electrical Manufacturer’s Association (NEMA): MG 1, Motors and Generators.

9. 2010 National Building Code of Canada, with 2011 Manitoba Amendments (NBC).

1.2 DEFINITIONS

A. Terminology pertaining to pumping unit performance and construction shall conform to the ratings and nomenclature of the Hydraulic Institute Standards (HIS).

1.3 SUBMITTALS

A. Shop Drawings:
1. Make, model, weight, and horsepower of each equipment assembly.
2. Complete catalog information, descriptive literature, specifications, and identification of materials of construction.
3. Performance data curves showing head, capacity, horsepower demand, NPSH required, and pump efficiency over the entire operating range of the pump, from shutoff to maximum capacity. Indicate separately the head, capacity, horsepower demand, overall efficiency, and minimum submergence required at the guarantee point.
4. Detailed structural, mechanical, and electrical drawings showing the equipment dimensions, size and location of connections and weights of associated equipment.
5. Power and control wiring diagrams, including terminals and numbers.
6. Complete motor nameplate data, as defined by NEMA, motor manufacturer, and including any motor modifications.
7. Bearing life calculations.
8. Factory finish system.
9. Seal lubricating and cooling requirements.

B. Quality Control Submittals:
1. Factory Functional and Field Performance Test Reports and Log.
2. Manufacturer’s Certification of Compliance that the factory finish system is identical to the requirements specified herein.
3. Special shipping, storage and protection, and handling instructions.
4. Manufacturer’s printed installation instructions.
5. Manufacturer’s Certificate of Proper Installation in accordance with Section 01 43 33, Contractor Field Services.
6. Suggested spare parts list to maintain the equipment in service for a period of 5 years. Include a list of special tools required for checking, testing, parts replacement, and maintenance with current price information.
7. List special tools, materials, and supplies furnished with equipment for use prior to and during startup and for future maintenance.
8. Operation and Maintenance Data: As specified in Section 01 78 23, Operation and Maintenance Data.
9. Submit written certification from Professional Engineer licensed in the Province of Manitoba stating that support systems, anchorage, and equipment have been designed according to requirements of the NBC for post-disaster structures, at time of Shop Drawing submittals.

1.4 EXTRA MATERIALS

A. Furnish, tag, and box for shipment and storage the following extra materials for each set of pumps of the same make and model:
   1. One set of bearings.
   2. One set of gaskets and O-ring seals.
   3. One set of keys, dowels, pins, etc.
   4. One shaft sleeve, if applicable.
   5. One mechanical seal set (inboard and outboard).
   6. One impeller.
   7. One impeller shaft.
   8. One complete set of any special tools required to dismantle pump.

PART 2 PRODUCTS

2.1 GENERAL

A. No “or-equal” or substitute products will be considered.

B. Pumps shall be of a standard and industry proven design, designed and sized for the full range of operating duties and conditions specified, and the selected units shall meet the specified requirements of minimum service life.

C. Coordinate pump requirements with drive manufacturer and be responsible for pump and drive requirements.

D. Where adjustable speed drives are required, furnish a coordinated operating system complete with pump, drive, and speed controller.

E. Design equipment, anchorage, and support systems for vertical and lateral loading in accordance with NBC.

2.2 PUMP DESIGN

A. Single passage, clog-free pump, utilizing a screw-centrifugal impeller. The overall pump design shall combine high efficiency, low required net positive suction head (NPSH), a large solid passage, the ability to handle rags or other fibrous material without plugging and handle high solids concentrations efficiently. The dry pit design shall be suitable for either horizontal or vertical mounting.

B. The hydraulic design of the impeller shall combine the action of a positive displacement screw with the action of a single vane centrifugal impeller to provide a single, non-bifurcated flowstream with only gradual changes in flow direction. The impeller flange or impeller shall contain a machined spiral groove on the rear face so that any solids in the pumped media are discharged from the space between the backplate and the rear of the impeller.

C. In order to maintain optimum running clearances along the entire length of the impeller so design hydraulic efficiencies are maintained, the geometry of the impeller and suction piece shall be conical, so that any axial adjustment of the impeller will cause the clearance between the impeller and suction piece to change uniformly along the entire length of the impeller. Designs incorporating curved, or combination curved/conical impeller and suction piece are not acceptable because in such designs clearances cannot be adjusted uniformly over the full length of the impeller.

D. Bearings shall conform to standards of Anti-Friction Bearing Manufacturers Association (AFBMA). Bearings shall be designed to provide L-10 life of 50,000 hours minimum.

E. Provide tapped and plugged case vent and drain connections.

F. Pumps with rated capacities greater than 22 L/s shall be furnished with an axial clearance device, which allows maintenance of the running clearance between the impeller and suction liner. The device shall have a minimum of three stainless steel adjusting bolts, on 120-degree centers, attached to the suction liners, so that the liner can be moved uniformly in relation to the impeller. The adjustment shall require no disassembly or partial disassembly of the pump and/or piping to accomplish.

G. Suction and discharge flanges shall conform to ANSI B16.1, Class 125.

H. Provide common pump and motor base fabricated from minimum 10 mm thick steel, suitably reinforced to support full weight of pump and motor.

I. Shaft Sealing:
   1. Flushless Mechanical Seal:
      a. Shaft sealing shall be by independently-mounted, flushless tandem mechanical seals running in oil bath. Oil chamber shall be intrinsic part of bearing frame and shall allow seals to be completely submerged in and lubricated by oil bath.
      b. Back-to-back mounted flushless double mechanical seals are also acceptable provided that an approved seal pressurization system is provided to maintain the oil between the seals pressurized to at least 1.5 times the maximum shut-off head of the pump. The pressurized lubricant tank shall be steel with sight glass and pressure gauge, installed on pump and pre-piped to seal chamber, and supplied by seal supplier. Flush pan shall be to ANSI Plan 7353.
      c. Outer seal shall have silicon carbide on tungsten carbide faces. Inner seal shall have carbon on ceramic faces.
      d. Manufacturer: John Crane, Chesterton, or AESSEAL.
   2. Mechanical Seal Using Seal Water:
      a. Manufacturer’s standard with seal water requirements not exceeding 1.5 liters per minute.
      b. Manufacturer: John Crane or Chesterton.

2.3 ELECTRIC MOTORS

A. See Section 26 20 00, Low Voltage AC Induction Motors.

B. Refer to Data Sheet(s) at end of this Section. Where variable speed is indicated, the pump will incorporate a variable frequency drive and the pump motor shall be inverter duty.

C. Coordinate motor and VFD parameters to ensure compatibility. See Section 26 29 23, Variable Frequency Drives.

2.4 SUPPLEMENTS

A. Specific requirements are attached to this section as supplements.

2.5 ACCESSORIES

A. Equipment Identification Plates: In accordance with Section 40 05 53, Identification Labels for Equipment, Fabricated Tanks, Valves and Piping Systems.

B. Lifting Lugs: Equipment weighing over 45 kg.

C. Anchor Bolts: Type 316 stainless steel, sized by equipment manufacturer.

2.6 FACTORY FINISHING

A. Prepare, and prime, and finish coat in accordance with Section 09 90 00, Painting and Coating.

2.7 SOURCE QUALITY CONTROL

A. Factory Tests and Adjustments: Test all equipment actually furnished.

B. Factory Test Report: Include test data sheets, curve test results, and performance test logs.

C. Pump Tests:
   1. Factory Functional Tests:
      a. Conduct on each pump.
      b. Manufacturer’s standard production tests.
      c. Hydrostatic Pressure Test: Test pump casing at 150 percent of shut-off head. Maintain test pressure for not less than 5 minutes.
      d. Vibration Test: In accordance with ANSI/HI 9.6.4.
   2. Factory Performance Tests:
      a. Conduct on each pump.
      b. In accordance with ANSI/HI 14.6, Acceptance Grade 2B.

D. Motor Tests:
   1. Conduct on each motor.
   2. In accordance with Section 26 20 00, Low Voltage AC Induction Motors.

PART 3 EXECUTION

3.1 INSTALLATION

A. Install in accordance with manufacturer's printed instructions.

B. Level base by means of steel wedges (steel plates and steel shims). Wedge taper not greater than 6 mm per 300 mm. Use double wedges to provide level bearing surface for pump and driver base. Accomplish wedging so that there is no change of level or springing of baseplate when anchor bolts are tightened.

C. Adjust pump assemblies such that the driving units are properly aligned, plumb, and level with the driven units and all interconnecting shafts and couplings. Do not compensate for misalignment by use of flexible couplings.

D. After pump and driver have been set in position, aligned, and shimmed to proper elevation, grout space between bottom of baseplate and concrete foundation with poured, non-shrinking grout of proper category, as specified in Section 03 60 00, Grouting. Remove wedges after grout is set and pack void with grout.

E. Connect suction and discharge piping without imposing strain to pump flanges.

F. Anchor Bolts: Accurately place using equipment templates and as specified in Section 05 50 00, Metal Fabrications (Basic).

G. Pipe baseplate drain to hub drain or scupper.

3.2 FIELD FINISHING

A. Equipment as specified in Section 09 90 00, Painting and Coating.

3.3 FIELD QUALITY CONTROL

A. Pump Tests:
   1. Field Functional Tests:
      a. Conduct on each pump.
      b. Alignment: Test complete assemblies for correct rotation, proper alignment and connection, and quiet operation.
      c. Operating Temperatures: Monitor bearing areas on pump and motor for abnormally high temperatures.
      d. Vibration Test:
         1) In accordance with ANSI/HI 9.6.4.
         2) Test with units installed and in normal operation, and discharging to connected piping systems.
         3) If units exhibit vibration in excess of limits specified, adjust or modify as necessary. Units that cannot be adjusted or modified to conform as specified shall be replaced.

2. Field Performance Tests:
   a. Conduct on each pump.
   b. Flow Output: Measured by plant instrumentation and storage volumes.
   c. Test for continuous 3 hour period.
   d. Test Report Requirements: In accordance with ANSI/HI 14.6.

B. Motor Tests:
   1. Conduct on each motor.
   2. Comply with requirements of Section 26 20 00, Low Voltage AC Induction Motors.

3.4 MANUFACTURER'S SERVICES

A. Manufacturer's Representative: Present at Site or classroom designated by the City, for minimum person-days listed below, travel time excluded:
   1. 2 person-days for installation assistance and inspection, and functional and performance testing and completion of Manufacturer's Certificate of Proper Installation.
   2. 2 person-days for prestartup classroom or Site training and facility startup.
   3. 2 person-days for post-startup training of the City's personnel. Training shall not commence until an accepted detailed lesson plan for each training activity has been reviewed by Contract Administrator.

B. See Section 01 43 33, Contractor Field Services and Section 01 91 14, Equipment Testing and Facility Startup.

3.5 SUPPLEMENTS

A. The supplements listed below, following "End of Section," are a part of this Specification.
   1. Pump Data Sheets.
   2. Motor Data Sheets.

END OF SECTION

PUMP DATA SHEET NO. 1
HRC WASTE SLUDGE PUMPS

Project: City of Winnipeg SEWPCC Upgrading/Expansion Project

Process/Facility: High Rate Clarifiers

Service: HRC Sludge

Pump Name: Waste Sludge Pumps

Equipment Tag Number(s): P-K251, P-K252

Manufacturer and Model: (1) Wemco SFF10-Z

(2) Hayward Gordon XCS10C

(3) _____

Number of Pumps Required: Two	Pump Type: Screw centrifugal

Drive Type: ☐ Constant Speed ☐ Two Speed ☒ Variable Speed

LIQUID PROPERTIES	OPERATING CONDITIONS	SERVICE CONDITIONS
Name: High rate clarifier sludge	Capacity (m^3/hr):	Ambient Temperature (°C):
Fluid Temperature (°C):	Rated: 538 2nd: 134 3rd: ±900	Min: 5 Max: 40
Min: 5 Normal: 10-20 Max: 25	Total Dynamic Head (m):	Relative Humidity (%):
Specific Gravity: 1.0-1.05 @ 20 °C	Rated: 10.6 2nd: 6.4 3rd: ±4.0	Min: 0 Max: 100
Vapour Pressure (kPa): 2.5 @ 20 °C	Static Head (m):	Altitude (m): 228
Viscosity (cp): 1.0-25 @ 20 °C	Rated: 6.2 2nd: 6.2 3rd: 4.2	☒ Indoor ☒ Heated
pH: 6.5-7.5	Static Suction Head/(Lift) (m):	☐ Outdoor ☐ Unheated
Total Suspended Solids (% by wt.): 0.1-2.0	Rated: 1.0 2nd: 1.0 3rd: 3.0	Area Electrical Classification:
Corrosion/Erosion/Abrasion Caused By:	NPSH Available (m):	Unclassified
Suspended grit and microsand	Rated: 10.7 2nd: 10.9 3rd: 12.4	
Remarks:	Remarks:	Remarks:

PERFORMANCE REQUIREMENTS (manufacturer to supply missing data)		
Max. Pump Speed (rpm): 1150	Min. Shut-off Head at Max. Speed (m): 20	Factory Testing:
Min. Pump Speed (rpm): 575	Min. Solids Passage (mm): 100	☒ Functional ☒ Performance
Speed at Rated Capacity (rpm): ±1150	Min. NPSH Margin Ratio: 1.5	Field Testing:
Min. Hyd. Eff. at Rated Capacity (%): 75	Min. Continuous Flow (m^3/hr): 134	☒ Functional ☒ Performance
Max. Power at Rated Capacity (kW): 20		Hydrostatic Test Pressure (kPag):
		150% of pump shut-off head

Remarks: _____

PUMP DATA SHEET NO. 1 (cont'd)
HRC WASTE SLUDGE PUMPS

PUMP CONSTRUCTION DETAILS (manufacturer to supply missing data)

Nozzles						Miscellaneous Connections		
	NPS (mm)	ANSI Class	Facing	Location			Size (mm)	Location
Suction	250	125	RF	End		Drain		
Discharge	250	125	RF	Top		Vent		

Impeller:
Type: Screw centrifugal
Diameter (mm): TBD by mfr

Casing Mount:
☒ Horizontal ☐ Vertical
☐ Centerline ☐ Near Centerline
☒ Foot ☐ Bracket

Motor Coupling:
☒ Direct ☐ Line shaft
☐ V-belt (side) ☐ V-belt (overhead)

Vent and Drain Connections:
☐ Tapped and plugged

Suction and Discharge Gauge Connections:
☐ Tapped and plugged

Packing:
Type: n/a
Manufacturer: n/a
Size/No. of Rings: n/a

Mechanical Seal:
Type: As specified
Manufacturer: Mfr's standard
Model: Mfr's standard
Lubrication: Oil

Bearings:
Radial (type/no.): Mfr's standard
Thrust (type/no.): Mfr's standard
Min. ABMA B-10 Life: 50,000 hrs
Lubrication: ☒ Grease ☐ Oil

Shaft Coupling:
Type: Flexible spacer
Manufacturer: Mfr's standard
Model: Mfr's standard

Remarks: Mechanical seal shall require no external source of flushing water.

MATERIALS OF CONSTRUCTION (manufacturer to supply missing data)

Volute: ASTM A48-CL30	Impeller Wear Rings: n/a	Shaft: Mfr's standard
Backplate: ASTM A48-CL30	Casing Wear Rings: n/a	Shaft Sleeve: Mfr's standard
Suction Piece: ASTM A48-CL30	Suction Piece Liner: ASTM A532-CLIII	
Impeller: ASTM A532-CLIII	Bearing Housing: ASTM A48-CL30	

Remarks: Impeller and suction piece liner shall be hi-chrome, min. 450 BHN.

ADDITIONAL REQUIREMENTS

MOTOR DATA SHEET NO. 1
HRC WASTE SLUDGE PUMPS

Project: City of Winnipeg SEWPCC Upgrading/Expansion Project

Process/Facility: High Rate Clarification

Service: High Rate Clarifier Sludge

Pump Name: Waste Sludge Pumps

Equipment Tag Number(s): P-K251, P-K252

Type: Squirrel-cage induction meeting requirements of NEMA MG 1.

Manufacturer: For multiple units of same type of equipment, furnish motors and accessories from single manufacturer.

Hazardous Location: ☐ Furnish motors for hazardous (classified) locations that conform to UL 674 and have an applied UL listing mark.

Motor Size (kW): 22.6 ☐ Min. ☐ Max.	Guaranteed Minimum Efficiency at Full Load (%): 93.0
Voltage: 575	Guaranteed Minimum Power Factor at Full Load (%): Mfr's standard
Phase: 3	Service Factor (at rated max. ambient temperature): ☐ 1.0 ☒ 1.15
Frequency (Hz): 60	Enclosure Type: TEFC
Synchronous Speed (rpm): 1200	Mounting Type: ☒ Horizontal ☐ Vertical
☐ Constant Speed	Vertical Shaft: ☐ Solid ☐ Hollow
☐ Two-speed Speed (rpm): Slow _____ Fast _____	Vertical Thrust Capacity (N): Up _____ Down _____
☒ Multi-speed Speed (rpm): Min. 600 Max. 1200	☒ Adjustable Speed Application (inverter duty rated) In accordance with Section 26 29 23, Variable Frequency Drives. Operating Speed Range: 50 to 100 % of rated speed
Variable Speed Load Classification: ☒ Variable Torque ☐ Constant Torque ☐ Constant Power	☒ Thermal Protection: Thermistors, one per phase ☐ Space Heater: _____ volts, single phase ☒ Oversize main terminal (conduit) box for motors ☒ Terminal for connection of equipment grounding wire in each terminal box
Winding: ☒ One ☐ Two	

ADDITIONAL REQUIREMENTS

☒ In accordance with Section 26 20 00, Low-Voltage AC Induction Motors.

PUMP DATA SHEET NO. 2
SODIUM BISULPHITE DISPERSION PUMPS

Project: City of Winnipeg SEWPCC Upgrading/Expansion Project

Process/Facility: Final Effluent/Secondary Clarifiers

Service: Final Effluent

Pump Name: Sodium Bisulphite Dispersion Pumps

Equipment Tag Number(s): P-S181, P-S182

Manufacturer and Model: (1) Wemco SFE5-J-1-BFE2W

(2) Hayward Gordon XCS5B

(3) _____

Number of Pumps Required: Two	Pump Type: Screw centrifugal

Drive Type: ☒ Constant Speed ☐ Two Speed ☐ Variable Speed

LIQUID PROPERTIES	OPERATING CONDITIONS	SERVICE CONDITIONS
Name: Final Effluent	Capacity (m^3/hr):	Ambient Temperature (°C):
Fluid Temperature (°C):	Rated: 125	Min: 5 Max: 40
Min: 5 Normal: 10-20 Max: 25	Total Dynamic Head (m):	Relative Humidity (%):
Specific Gravity: 1.0-1.02 @ 20 °C	Rated: 15	Min: 0 Max: 100
Vapour Pressure (kPa): 2.5 @ 20 °C		Altitude (m): 228
Viscosity (cp): 1.0-1.5 @ 20 °C		☒ Indoor ☒ Heated
pH: 6.5-7.5		☐ Outdoor ☐ Unheated
Total Suspended Solids (% by wt.): 0.1-0.5		Area Electrical Classification:
Corrosion/Erosion/Abrasion Caused By:	NPSH Available (m):	Unclassified
_____	Rated: 14	
Remarks: _____	Remarks: _____	Remarks: _____

PERFORMANCE REQUIREMENTS (manufacturer to supply missing data)

Max. Pump Speed (rpm): 1800	Min. Shut-off Head (m):	Factory Testing:
	Min. Solids Passage (mm): 80	☒ Functional ☒ Performance
Speed at Rated Capacity (rpm): ±1650	Min. NPSH Margin Ratio: 1.5	Field Testing:
Min. Hyd. Eff. at Rated Capacity (%): 70		☒ Functional ☒ Performance
Max. Power at Rated Capacity (kW):		Hydrostatic Test Pressure (kPag):
		150% of pump shut-off head

Remarks: _____

PUMP DATA SHEET NO. 2 (cont'd)
SODIUM BISULPHITE DISPERSION PUMPS

PUMP CONSTRUCTION DETAILS (manufacturer to supply missing data)

Nozzles						Miscellaneous Connections		
	NPS (mm)	ANSI Class	Facing	Location			Size (mm)	Location
Suction	150	125	RF	End		Drain		
Discharge	125 or 150	125	RF	Top		Vent		

Impeller:
Type: Screw centrifugal
Diameter (in): TBD by mfr

Casing Mount:
☒ Horizontal ☐ Vertical
☐ Centerline ☐ Near Centerline
☒ Foot ☐ Bracket

Motor Coupling:
☒ Direct ☐ Line shaft
☐ V-belt (side) ☐ V-belt (overhead)

Vent and Drain Connections:
☐ Tapped and plugged

Suction and Discharge Gauge Connections:
☐ Tapped and plugged

Packing:
Type: n/a
Manufacturer: n/a
Size/No. of Rings: n/a

Mechanical Seal:
Type: As specified
Manufacturer: Mfr's standard
Model: Mfr's standard
Lubrication: Oil

Bearings:
Radial (type/No.): Mfr's standard
Thrust (type/no.): Mfr's standard
Min. ABMA B-10 Life: 50,000 hrs
Lubrication: ☒ Grease ☐ Oil

Shaft Coupling:
Type: Flexible spacer
Manufacturer: Mfr's standard
Model: Mfr's standard

Remarks: Mechanical seal shall require no external source of flushing water.

MATERIALS OF CONSTRUCTION (manufacturer to supply missing data)

Volute: ASTM A48-CL30	Impeller Wear Rings: n/a	Shaft: Mfr's standard
Backplate: ASTM A48-CL30	Casing Wear Rings: n/a	Shaft Sleeve: Mfr's standard
Suction Piece: ASTM A48-CL30	Suction Piece Liner: ASTM A532-CLIII	
Impeller: ASTM A532-CLIII	Bearing Housing: ASTM A48-CL30	

Remarks: Impeller and suction piece liner shall be hi-chrome, min. 450 BHN.

ADDITIONAL REQUIREMENTS

MOTOR DATA SHEET NO. 2
SODIUM BISULPHITE DISPERSION PUMPS

Project: City of Winnipeg SEWPCC Upgrading/Expansion Project

Process/Facility: Final Effluent/Secondary Clarifiers

Service: Final Effluent

Pump Name: Sodium Bisulphite Dispersion Pumps

Equipment Tag Number(s): P-S181, P-S182

Type: Squirrel-cage induction meeting requirements of NEMA MG 1.

Manufacturer: For multiple units of same type of equipment, furnish motors and accessories from single manufacturer.

Hazardous Location: ☐ Furnish motors for hazardous (classified) locations that conform to UL 674 and have an applied UL listing mark.

Motor Size (kW): 11.2 ☐ Min. ☒ Max.	Guaranteed Minimum Efficiency at Full Load (%): 93.0
Voltage: 575	Guaranteed Minimum Power Factor at Full Load (%): Mfr's standard
Phase: 3	Service Factor (at rated max. ambient temperature): ☐ 1.0 ☒ 1.15
Frequency (Hz): 60	Enclosure Type: TEFC
Synchronous Speed (rpm): 1800	Mounting Type: ☒ Horizontal ☐ Vertical
☒ Constant Speed	Vertical Shaft: ☐ Solid ☐ Hollow
☐ Two-speed Speed (rpm): Slow _____ Fast _____	Vertical Thrust Capacity (N): Up _____ Down _____ ☐ Adjustable Speed Application (inverter duty rated) In accordance with Section 26 29 23, Variable Frequency Drives. Operating Speed Range: 50 to 100 % of rated speed
☐ Multi-speed Speed (rpm): Min. __ Max.	
Variable Speed Load Classification: ☒ Variable Torque ☐ Constant Torque ☐ Constant Power	☐ Thermal Protection: ☐ Space Heater: _____ volts, single phase ☒ Oversize main terminal (conduit) box for motors ☒ Terminal for connection of equipment grounding wire in each terminal box
Winding: ☐ One ☐ Two	

ADDITIONAL REQUIREMENTS

☒ In accordance with Section 26 20 00, Low-Voltage AC Induction Motors.

PUMP DATA SHEET NO. 3
RETURN ACTIVATED SLUDGE PUMPS

Project: City of Winnipeg SEWPCC Upgrading/Expansion Project

Process/Facility: Secondary Clarifiers

Service: Return Activated Sludge

Pump Name: RAS Pumps

Equipment Tag Number(s): P-S216, P-S217, P-S218

Manufacturer and Model: (1) Wemco SFH12-Z-1-BFH2W

(2) Hayward Gordon XCS12C

(3) _____

Number of Pumps Required: Three	Pump Type: Screw centrifugal

Drive Type: ☐ Constant Speed ☐ Two Speed ☒ Variable Speed

LIQUID PROPERTIES	OPERATING CONDITIONS	SERVICE CONDITIONS
Name: Return Activated Sludge	Capacity (m^3/hr):	Ambient Temperature (°C):
Fluid Temperature (°C):	Rated: 23,800 2nd: 14,300	Min: 5 Max: 40
Min: 5 Normal: 10-20 Max: 25	Total Dynamic Head (m):	Relative Humidity (%):
Specific Gravity: 1.0-1.02 @ 20 °C	Rated: 8.5 2nd: 4.0	Min: 0 Max: 100
Vapour Pressure (kPa): 2.5 @ 20 °C		Altitude (m): 228
Viscosity (cp): 1.0-25 @ 20 °C		☒ Indoor ☒ Heated
pH: 6.5-7.5		☐ Outdoor ☐ Unheated
Total Suspended Solids (% by wt.): 0.1-1.0		Area Electrical Classification:
Corrosion/Erosion/Abrasion Caused By:	NPSH Available (m):	Unclassified
_____	Rated: 13.5	
Remarks: _____	Remarks: _____	Remarks: _____

PERFORMANCE REQUIREMENTS (manufacturer to supply missing data)

Max. Pump Speed (rpm): 900	Min. Shut-off Head (m): 11	Factory Testing:
Min. Pump Speed (rpm): 550	Min. Solids Passage (mm): 100	☒ Functional ☒ Performance
Speed at Rated Capacity (rpm): ±860	Min. NPSH Margin Ratio: 1.5	Field Testing:
Min. Hyd. Eff. at Rated Capacity (%): 75	Min. Continuous Flow (m^3/d): 5,000	☒ Functional ☒ Performance
Max. Power at Rated Capacity (kW):		Hydrostatic Test Pressure (kPag):
		150% of pump shut-off head

Remarks: _____

PUMP DATA SHEET NO. 3 (cont'd)
RETURN ACTIVATED SLUDGE PUMPS

PUMP CONSTRUCTION DETAILS (manufacturer to supply missing data)

Nozzles						Miscellaneous Connections		
	NPS (mm)	ANSI Class	Facing	Location			Size (mm)	Location
Suction	300	125	RF	End		Drain		
Discharge	300	125	RF	Top		Vent		

Impeller:
Type: Screw centrifugal
Diameter (in): TBD by mfr

Casing Mount:
☒ Horizontal ☐ Vertical
☐ Centerline ☐ Near Centerline
☒ Foot ☐ Bracket

Motor Coupling:
☒ Direct ☐ Line shaft
☐ V-belt (side) ☐ V-belt (overhead)

Vent and Drain Connections:
☐ Tapped and plugged

Suction and Discharge Gauge Connections:
☐ Tapped and plugged

Packing:
Type: n/a
Manufacturer: n/a
Size/No. of Rings: n/a

Mechanical Seal:
Type: As specified
Manufacturer: Mfr's standard
Model: Mfr's standard
Lubrication:

Bearings:
Radial (type/No.): Mfr's standard
Thrust (type/no.): Mfr's standard
Min. ABMA B-10 Life: 50,000 hrs
Lubrication: ☒ Grease ☐ Oil

Shaft Coupling:
Type: Flexible spacer
Manufacturer: Mfr's standard
Model: Mfr's standard

Remarks: Mechanical seal with external source of flushing water.

MATERIALS OF CONSTRUCTION (manufacturer to supply missing data)

Volute: ASTM A48-CL30	Impeller Wear Rings: n/a	Shaft: Mfr's standard
Backplate: ASTM A48-CL30	Casing Wear Rings: n/a	Shaft Sleeve: Mfr's standard
Suction Piece: ASTM A48-CL30	Suction Piece Liner: ASTM A532-CLIII	
Impeller: ASTM A532-CLIII	Bearing Housing: ASTM A48-CL30	

Remarks: Impeller and suction piece liner shall be hi-chrome, min. 450 BHN.

ADDITIONAL REQUIREMENTS

MOTOR DATA SHEET NO. 3
RETURN ACTIVATED SLUDGE PUMPS

Project: City of Winnipeg SEWPCC Upgrading/Expansion Project

Process/Facility: Secondary Clarifiers

Service: Return Activated Sludge

Pump Name: RAS Pumps

Equipment Tag Number(s): P-S216, P-S217, P-S218

Type: Squirrel-cage induction meeting requirements of NEMA MG 1.

Manufacturer: For multiple units of same type of equipment, furnish motors and accessories from single manufacturer.

Hazardous Location: ☐ Furnish motors for hazardous (classified) locations that conform to UL 674 and have an applied UL listing mark.

Motor Size (kW): 37.5 ☒ Min. ☒ Max.	Guaranteed Minimum Efficiency at Full Load (%): 93.0
Voltage: 575	Guaranteed Minimum Power Factor at Full Load (%): Mfr's standard
Phase: 3	Service Factor (at rated max. ambient temperature): ☐ 1.0 ☒ 1.15
Frequency (Hz): 60	Enclosure Type: TEFC
Synchronous Speed (rpm): 900	Mounting Type: ☒ Horizontal ☐ Vertical
☐ Constant Speed	Vertical Shaft: ☐ Solid ☐ Hollow
☐ Two-speed Speed (rpm): Slow _____ Fast _____	Vertical Thrust Capacity (N): Up _____ Down _____
☒ Multi-speed Speed (rpm): Min. TBD Max. 900	☒ Adjustable Speed Application (inverter duty rated) In accordance with Section 26 29 23, Variable Frequency Drives. Operating Speed Range: 50 to 100 % of rated speed
Variable Speed Load Classification: ☒ Variable Torque ☐ Constant Torque ☐ Constant Power	☒ Thermal Protection: Thermistors, one per phase ☐ Space Heater: _____ volts, single phase ☒ Oversize main terminal (conduit) box for motors ☒ Terminal for connection of equipment grounding wire in each terminal box
Winding: ☒ One ☐ Two	

ADDITIONAL REQUIREMENTS

☒ In accordance with Section 26 20 00, Low-Voltage AC Induction Motors.

SECTION 43 21 13.16

HORIZONTAL SPLIT-CASE CENTRIFUGAL PUMPS

EQUIPMENT AND COMPONENT NUMBERS

ID No.	Equipment Description
P-S550	Flushing Water Pump

PART 1 GENERAL

1.1 REFERENCES

A. The following is a list of standards which may be referenced in this section:
1. American Bearing Manufacturers Association (ABMA).
2. American Iron and Steel Institute (AISI).
3. American Society of Mechanical Engineers (ASME):
   a. B16.1, Grey Iron Pipe Flanges and Flanged Fittings Classes 25, 125, and 250.
   b. B16.5, Pipe Flanges and Flanged Fittings NPS 1/2 Through NPS 24 Metric/Inch Standard.
   c. B16.47, Large Diameter Steel Flanges NPS 26 Through NPS 60 Metric/Inch Standard.
4. ASTM International (ASTM):
   a. A48/A48M, Standard Specification for Gray Iron Castings.
   b. A108, Standard Specification for Steel Bar, Carbon and Alloy, Cold-Finished.
   c. A276/A276M, Standard Specification for Stainless Steel Bars and Shapes.
   d. A436, Standard Specification for Austenitic Gray Iron Castings.
   e. A532/A532M, Standard Specification for Abrasion-Resistant Cast Irons.
   f. A582/A582M, Standard Specification for Free-Machining Stainless Steel Bars.
   g. A743/A743M, Standard Specification for Castings, Iron-Chromium, Iron-Chromium-Nickel, Corrosion Resistant, for General Application.
   h. B62, Standard Specification for Composition Bronze or Ounce Metal Castings.
   i. B148, Standard Specification for Aluminum-Bronze Sand Castings.
5. Hydraulic Institute (ANSI/HI):
   a. 1.1-1.2, Rotodynamic Centrifugal Pumps for Nomenclature and Definitions.
   b. 9.6.4, Rotodynamic Pumps for Vibration Measurements and Allowable Values.
   c. 14.6, Rotodynamic Pumps for Hydraulic Performance Acceptance Tests.
6. Institute of Electrical and Electronics Engineers (IEEE): 112, Standard Test Procedure for Polyphase Induction Motors and Generators.
7. National Electrical Manufacturer's Association (NEMA): MG 1, Motors and Generators.
8. 2010 National Building Code of Canada, with 2011 Manitoba Amendments (NBC).

1.2 DEFINITIONS

A. Terminology pertaining to pumping unit performance and construction shall conform to the ratings and nomenclature of the Hydraulic Institute Standards.

1.3 SUBMITTALS

A. Shop Drawings:
1. Make, model, weight, and horsepower of each equipment assembly.
2. Complete catalog information, descriptive literature, specifications, and identification of materials of construction.
3. Performance data curves showing head, capacity, horsepower demand, and pump efficiency over the entire operating range of the pump, from shutoff to maximum capacity. Indicate separately the head, capacity, horsepower demand, overall efficiency, and minimum submergence required at the guarantee point.
4. Detailed drawings showing the equipment dimensions, size, and locations of connections and weights of associated equipment.
5. Power and control wiring diagrams, including terminals and numbers.
6. Complete motor nameplate data, as defined by NEMA, motor manufacturer, and including any motor modifications.
7. Factory finish system.
8. Submit written certification from Professional Engineer licensed in the Province of Manitoba stating that support systems, anchorage, and equipment have been designed according to requirements of the NBC for post-disaster structures at time of Shop Drawing submittals.

B. Quality Control Submittals:
1. Factory Functional and Performance Test Reports.
2. Manufacturer's Certification of Compliance that the factory finish system is identical to the requirements specified herein.
3. Special shipping, storage and protection, and handling instructions.
4. Manufacturer's printed installation instructions.
5. Manufacturer's Certificate of Proper Installation.
6. Suggested spare parts list to maintain the equipment in service for a period of 5 years. Include a list of special tools required for checking, testing, parts replacement, and maintenance with current price information.
7. List special tools, materials, and supplies furnished with equipment for use prior to and during startup and for future maintenance.
8. Operation and maintenance manual.

1.4 EXTRA MATERIALS

A. Furnish, tag, and box for shipment and storage the following extra materials:

Item	Quantity
Bearings	One complete set

Item	Quantity
Gaskets and O-ring seals	One complete set
Keys, dowels, pins, etc.	One complete set
Shaft sleeve	One
Mechanical seal	One
Lubricants	One year supply
Any special tools required for routine maintenance	One complete set

B. Delivery: In accordance with Section 01 61 00, Common Product Requirements.

PART 2 PRODUCTS

2.1 GENERAL

A. No “or-equal” or substitute products will be considered.

B. Coordinate pump requirements with drive manufacturer and be responsible for pump and drive requirements.

C. Where adjustable speed drives are required, furnish a coordinated operating system complete with pump, drive, and speed controller.

D. Pump manufacturer to note that pump suction does not comply with the requirements of the Hydraulic Institute. Pump manufacturer to review pump suction and discharge piping shown on Drawings and design and supply a suitable pump.

2.2 PUMP DESIGN

A. Design the casing so that the impeller assembly and rings may be withdrawn and all passages and working parts readily accessible for the purpose of inspection, repair, or removal of the rotating element without disturbing any of the piping system. Grind smooth the interior surfaces of the pump casing.

B. Flange the suction and discharge nozzles of the pump casing in accordance with current ASA Specification B16.1 for Class 125 flanges.

C. Provide an impeller of the enclosed type, firmly keyed to the shaft and statically and dynamically balanced for the speed range at which it will be operated.

D. Provide removable wearing rings on impeller and casing, firmly held in place to prevent rotation or displacement. Accurately machine the wearing rings all over for minimum running clearance to reduce leakage. Install the rings in such a way that they can be removed without difficulty.

E. The pump shaft to be ground and polished all over and of ample size to prevent undue deflection or whip under all starting and running conditions.

F. Provide a mechanically flexible coupling to connect the pump shaft to the drive motor shaft. The coupling to be a flexible cone ring. For alignment, allow for the possibility of the pump to be at lowest raw water temperature and the motor at rated operating temperature.

G. Provide anti-friction type ball or roller bearings of substantial proportions for continuous operation without overheating. Provide the pump with thrust bearings of approved design. Provide bearings with a B-10 rating of at least 100,000 hours as set out by the Anti-Friction Bearing Manufacturers' Association.

H. Provide the pump with suitable tapped openings of ample size for vacuum priming, air relief, water seal and drainage pipe connections. Provide gauge connections tapped for 6 mm pipe on the suction and discharge nozzles close to the flanges at the horizontal centre line. The vacuum priming tap to be 50 mm diameter.

I. Design equipment, anchorage, and support systems for vertical and lateral loading in accordance with National Building Code.

2.3 BASEPLATE

A. Mount equipment and driver on a common baseplate in a compact arrangement.

B. Provide equipment baseplates of heavy cast iron or of welded structural steel section at least 13 mm thick. Provide mounting plates at least 20 mm thick for mounting equipment and driver. Machine surfaces for mounting equipment and driver to an arithmetical average roughness height of less than 3 microns.

C. Provide closed baseplates suitable for grouting. Provide grout holes, vent holes and anchor bolt holes in the baseplates.

D. Provide baseplates with a drip lip and drain connections to the exterior of the base. Bossed connections to drip lips shall be below the gutter invert and shall be at least, 25 mm N.P.T. Provide piping from the drain connections to the building drainage system.

E. Provide jack bolts with fine thread to allow two directional horizontal movement of the motor for realignment purposes.

F. Provide stainless steel anchor bolts designed to restrain the pump from movement. Provide pipe sleeves for anchor bolts not less than 2 1/2 times the diameter of the anchor bolts.

2.4 SUPPLEMENTS

A. Some specific requirements are attached to this section as supplements.

2.5 ACCESSORIES

A. Equipment Identification Plates: In accordance with Section 40 05 53, Identification Labels for Equipment, Fabricated Tanks, Valves and Piping Systems.

B. Lifting Lugs: Equipment weighing over 45 kg.

C. Anchor Bolts: Type 316 stainless steel, sized by equipment manufacturer, 13 mm minimum diameter, and as specified in Section 05 50 00, Metal Fabrications (Basic).

2.6 FACTORY FINISHING

A. Prepare, prime, and finish coat in accordance with Section 09 90 00, Painting and Coatings.

2.7 SOURCE QUALITY CONTROL

A. Factory Tests and Adjustments:
   1. Testing to be in accordance with latest edition of HI Standards.
   2. Pump Tests:
      a. Hydrostatic Test:
         1) Test pressure containing components of pump including, as a minimum, pump casing, suction nozzle, and back cover.
         2) Test pressure to be 150 percent of maximum shutoff head. Maintain test pressure for not less than 10 minutes.
      b. Vibration Test:
         1) Test pump at rated speed in accordance with HI 9.6.4.
         2) Statically and dynamically balance rotating assembly prior to final assembly.
         3) Vibration shall not exceed limits specified in HI 9.6.4.
      c. Performance Test:
         1) Test fully assembled pump in accordance with HI 14.6, Acceptance Grade 1U.
         2) Performance testing to be at rated speed.
      d. Submit complete test records certified correct by authorized representative of pump manufacturer for each test performed.
      e. Make necessary adjustments, realignments, and retest to bring pumps into compliance.
   3. Motor Tests: In accordance with Section 26 20 00, Low-Voltage AC Induction Motors.

PART 3 EXECUTION

3.1 INSTALLATION

A. Install in accordance with manufacturer's printed instructions.

B. Level base by means of steel wedges (steelplates and steel shims). Wedge taper not greater than 6 mm per 0.3 m. Use double wedges to provide a level bearing surface for the pump and driver base. Accomplish wedging so that there is no change of level or springing of the baseplate when the anchor bolts are tightened.

C. Adjust pump assemblies such that driving units are properly aligned, plumb, and level with driven units and all interconnecting shafts and couplings. Do not compensate for misalignment by use of flexible couplings.

D. After pump and driver have been set in position, aligned, and shimmed to proper elevation, grout space between bottom of baseplate and concrete foundation with poured, non-shrinking grout of proper category, as specified in Section 03 60 00, Grouting. Remove wedges after grout is set and pack void with grout.

E. Connect suction and discharge piping without imposing strain to pump flanges.

F. Anchor Bolts: Accurately place using equipment templates and as specified in Section 05 50 00, Metal Fabrications (Basic).

G. Pipe pump drain(s) to hub drain or scupper with PVC pipes.

3.2 FIELD FINISHING

A. Equipment as specified in Section 09 90 00, Painting and Coating.

3.3 FIELD QUALITY CONTROL

A. Functional Tests:
   1. Conduct on each pump, system, and subsystem as specified in Section 01 91 14, Equipment Testing and Facility Startup.
   2. Alignment: Test complete assemblies for correct rotation, proper alignment and connection, and quiet operation.
   3. Operating Temperatures and Vibration: Monitor bearing areas on pump and motor for abnormally high temperatures or vibrations.
   4. Vibration Test:
      a. Test fully assembled pump at rated speed and specified rated capacity in accordance with HI 9.6.4.
      b. Test with unit installed and in normal operation and discharging to connected piping system, and with actual building structures and foundations provided.
      c. Vibration shall not exceed limits specified in HI 9.6.4.
      d. If units exhibit vibration in excess of the limits specified, adjust or modify as necessary to bring units into compliance. Units that cannot be adjusted or modified to conform as specified shall be replaced at no cost to the City.
      e. Provide instrumentation in current calibration to measure pump vibration at locations outlined in HI Standards.
   5. Test Records and Report: Prepare and submit complete test report along with test records.

B. Performance Test:
   1. Conduct on each pump as specified in Section 01 91 14, Equipment Testing and Facility Startup.
   2. Perform under normal operating conditions at rated speed.
   3. Test for continuous 3-hour period without malfunction.

4. Measure and record pump flow rate, pump suction and discharge pressures (corrected for gauge elevation and velocity head), motor amperage, and voltage. Calculated differential head at rated capacity shall meet or exceed rated head specified. Calculated shaft power at rated capacity shall not exceed power shown on accepted factory test results.
5. Use of plant instrumentation is allowed for tests. Provide additional instrumentation as required to obtain required test data.
6. Test Records and Report: Prepare and submit complete test report along with test records.

3.4 MANUFACTURER'S SERVICES

A. Manufacturer’s Representative: Present at Site or classroom designated by the City, for minimum person-days listed below, travel time excluded:
   1. 1 person-day for installation assistance and inspection, and functional and performance testing and completion of Manufacturer’s Certificate of Proper Installation.
   2. 1 person-days for prestartup classroom or Site training and facility startup.
   3. 1 person-days for post-startup training of the City’s personnel. Training shall not commence until an accepted detailed lesson plan for each training activity has been reviewed by Contract Administrator.

B. See Section 01 43 33, Contractor Field Services and Section 01 91 14, Equipment Testing and Facility Startup.

3.5 SUPPLEMENTS

A. The supplements listed below, following “End of Section,” are a part of this Specification.
   1. Data Sheets:
      a. Pump.
      b. Motor.

END OF SECTION

PUMP DATA SHEET
FLUSHING WATER PUMP

Project: City of Winnipeg SEWPCC Upgrading/Expansion Project

Process/Facility: Secondary Clarifiers

Service: Flushing Service Water

Pump Name: Flushing Water Pump

Equipment Tag Number(s): P-S550

Manufacturer and Model: (1) Xylem A-C 8300 Series 8x6x17L impeller diameter 416 mm

(2) Flowserve 6LR-16B impeller diameter 381 mm

No. Pumps Required: One	Pump Type: Horizontal Split Case	
Drive Type: ☐ Constant ☒ Adjustable		
LIQUID	**OPERATING CONDITIONS**	**SERVICE CONDITIONS**
Name: Plant Effluent Water	Capacity (l/s): Rated 90	Temp (°C): Max 5 Min 40
Fluid Temperature (°C):		Rel. Hum (%): Max 0 Min 95
Min: 5 Normal: 10-20 Max: 25	Total Dynamic Head (m): 70	Altitude (m): 228
Specific Gravity: 1.0-1.01 @ 20 °C	NPSH Available (m): 10	☒ Indoor ☒ Heated
Vapour Pressure (kPa): 2.5 @ 20 °C		☐ Outdoor ☐ Unheated
Viscosity (cp): 1.3 @ 20 °C		Area Classification: Unclassified
pH: 6.5-7.5		Other:
Corrosion/Erosion/Abrasion Caused by:		
Remarks:	Remarks:	Remarks:

Equipment Tag Number(s): P-S550		
PERFORMANCE REQUIREMENTS (manufacturer to supply missing data)		
Speed at Rated Capacity (rpm): ±1750	Min. Continuous Flow (l/s): 40	NPSH Required (m water): _____
Pump Speed Range (rpm): _____/_____	Max. Head, Rated Imp. (m): _____	3% Head Drop_____
Efficiency (%): _____	Max. Power, Rated Imp (kW): _____	Suction Specific Speed: _____
Rated Power (kW): 93.12		Factory Testing:
		☒Required ☐Not Required
Remarks:		

PUMP CONSTRUCTION DETAILS (manufacturer to supply missing data)

Nozzles						**Miscellaneous Connections**		
	NPS (mm)	ANSI Class	Facing	Location			**Size**	**Location**
Suction	200	125	FF	Side		Drain	_____	_____
Discharge	150	125	FF	Side		Vent	_____	_____
						Pres. Gauge	_____	_____
						Warm Up	_____	_____

Casing Mount: ☐ Soleplate	Impeller Diameter (in.):	Bearings (Type/No.):
☐ Centerline ☐ Bracket	Rated _____ Max _____ Min _____	Radial _____ Thrust _____ Min. ABMA B-10 Life: 100,000 hrs
☐ Near Centerline		Lubrication Type:
Casing Type:		☒ Grease ☐ Oil
☐ Single Volute ☐ Diffuser		Coupling:
☐ Double Volute ☐ Staggered		Manufacturer _____
Hydro Test Pressure (kPa): _____	Mechanical Seal:	Type _____ Model _____
Field Testing: ☐ Not required	API Class Code _____	Driver Half-Coupling Mounted by:
☒Required, functional and performance	Manufacturer _____	☐ Pump Mfr. ☐ Driver Mfr.
	Model _____	☐ Purchaser
	Manufacturer Code _____	Gland Type/Material: _____
		Gland Plate Taps Required:
		☐ Quench ☐ Flush ☐ Drain ☐ Vent
Remarks: Mechanical seal with external source of flushing water.		

Equipment Tag Number(s): P-S550		
MATERIALS (manufacturer to supply missing data)		
Case: Cast or Ductile Iron	Impeller: Stainless Steel	Shaft: Mfr's standard
Case Wear Rings:	Impeller Wear Rings: Stainless Steel	Shaft Sleeve: Mfr's standard
Remarks:		Baseplate:
		Material
ADDITIONAL REQUIREMENTS		
Horizontal, Bolted Pump Casing		

MOTOR DATA SHEET
FLUSHING WATER PUMP

Project: City of Winnipeg SEWPCC Upgrading/Expansion Project

Process/Facility: Secondary Clarifiers

Service: Flushing Water

Pump Name: Flushing Water Pump

Equipment Tag Number(s): P-S550

Type: Squirrel-cage induction meeting requirements of NEMA MG 1.

Manufacturer: For multiple units of same type of equipment, furnish motors and accessories from single manufacturer.

Hazardous Location: ☐ Furnish motors for hazardous (classified) locations that conform to UL 674 and have an applied UL listing mark.

Motor Size (kW): 93.12 ☒ Min. ☒ Max.	Guaranteed Minimum Efficiency at Full Load (%): 93.0
Voltage: 575	Guaranteed Minimum Power Factor at Full Load (%): Mfr's standard
Phase: 3	Service Factor (at rated max. ambient temperature): ☐ 1.0 ☒ 1.15
Frequency (Hz): 60	Enclosure Type: TEFC
Synchronous Speed (rpm): 1800	Mounting Type: ☒ Horizontal ☐ Vertical
☐ Constant Speed	Vertical Shaft: ☐ Solid ☐ Hollow
☐ Two-speed Speed (rpm): Slow _____ Fast _____	Vertical Thrust Capacity (N): Up _____ Down _____
☒ Multi-speed Speed (rpm): Min. TBD Max. 1800	☒ Adjustable Speed Application (inverter duty rated) In accordance with Section 26 29 23, Variable Frequency Drives. Operating Speed Range: 50 to 100 % of rated speed
Variable Speed Load Classification: ☒ Variable Torque ☐ Constant Torque ☐ Constant Power	☒ Thermal Protection: Thermistors, one per phase ☐ Space Heater: _____ volts, single phase ☒ Oversize main terminal (conduit) box for motors ☒ Terminal for connection of equipment grounding wire in each terminal box
Winding: ☐ One ☐ Two	

ADDITIONAL REQUIREMENTS

☒ In accordance with Section 26 20 00, Low-Voltage AC Induction Motors.

SECTION 43 21 13.19

NON-CLOG DRY-PIT CENTRIFUGAL PUMPS

EQUIPMENT AND COMPONENT NUMBERS

ID No.	Equipment Description
P-G102	Raw Sewage Pump
P-G221	Sluice Water Pump
P-G222	Sluice Water Pump
P-D451	WAS Filtrate Pump
P-D452	WAS Filtrate Pump
P-D461	FSL Filtrate Pump
P-D462	FSL Filtrate Pump
P-D463	FSL Filtrate Pump
P-D464	FSL Filtrate Pump

PART 1 GENERAL

1.1 REFERENCES

A. The following is a list of standards which may be referenced in this section:
   1. American Bearing Manufacturers Association (ABMA):
      a. 9, Load Ratings and Fatigue Life for Ball Bearings.
      b. 11, Load Ratings and Fatigue Life for Roller Bearings.
   2. American Iron and Steel Institute (AISI).
   3. American National Standards Institute (ANSI):
      a. B16.21, Nonmetallic Flat Gaskets for Pipe Flanges.
   4. American Society of Mechanical Engineers (ASME):
      a. B16.1, Grey Iron Pipe Flanges and Flanged Fittings Classes 25, 125, and 250.
      b. B36.10M, Welded and Seamless Wrought Steel Pipe.
      c. B106.1, Design of Transmission Shafting.
   5. ASTM International (ASTM):
      a. A48/A48M, Standard Specification for Gray Iron Castings.
      b. A134, Standard Specification for Pipe, Steel, Electric-Fusion (Arc)-Welded (Sizes NPS 16 and Over).
      c. A283/A283M, Standard Specification for Low and Intermediate Tensile Strength Carbon Steel Plates.
      d. A285/A285M, Standard Specification for Pressure Vessel Plates, Carbon Steel, Low and Intermediate Tensile Strength.
      e. A307, Standard Specification for Carbon Steel Bolts and Studs, 60,000 psi Tensile Strength.
      f. A563, Standard Specification for Carbon and Alloy Steel Nuts.
      g. D1330, Standard Specification for Rubber Sheet Gaskets.

6. American Water Works Association (AWWA):
   a. C200, Steel Water Pipe - 6 Inches and Larger.
   b. C207, Steel Pipe Flanges for Waterworks Services, Sizes 4 Inches Through 144 Inches.
   c. C208, Dimensions for Fabricated Steel Water Pipe Fittings.
   d. C210, Liquid-Epoxy Coatings and Linings for Steel Water Pipe and Fittings.
7. Department of Defense (DoD) Test Method Standards:
   a. MIL STD 167, Mechanical Vibrations of Shipboard Equipment.
8. Hydraulic Institute Standards (ANSI/HI):
   a. 1.1-1.2, Rotodynamic Centrifugal Pumps for Nomenclature and Definitions.
   b. 9.6.3, Centrifugal and Vertical Pumps for Allowable Operating Region.
   c. 9.6.4, Rotodynamic (Centrifugal and Vertical) Pumps for Vibration Measurement and Allowable Values.
   d. 9.6.6, Rotodynamic Pumps for Pump Piping.
   e. 9.6.8, Rotodynamic Pumps – Guidelines for Dynamics of Pumping Machinery.
   f. 9.8, Rotodynamic Pumps for Pump Intake Design.
   g. 14.6, Rotodynamic Pumps for Hydraulic Performance Acceptance Tests.
9. International Standards Organization (ISO):
   a. 1940, Balance Quality Requirements of Rigid Rotors.
10. National Electrical Manufacturer’s Association (NEMA): MG 1, Motors and Generators.
11. Occupational Health and Safety Act (OHSA).
12. National Electrical Manufacturer's Association (NEMA): MG 1, Motors and Generators.
13. 2010 National Building Code of Canada (NBC) with 2011 Manitoba Amendments.

1.2 DEFINITIONS

A. Terminology pertaining to pumping unit performance and construction shall conform to the ratings and nomenclature of the Hydraulic Institute Standards.

B. FEA: Finite element analysis.

1.3 SUBMITTALS

A. Furnish submittals in accordance with Section 01 33 00, Submittal Procedures.

B. Action Submittals:
   1. Shop Drawings:
      a. Make, model, weight, and horsepower of each pump assembly.
      b. Complete pump and motor catalog information, descriptive literature, specifications, and identification of materials of construction.
      c. Performance data curves showing:
         1) Capacity vs. head, shaft power, NPSH required, and pump efficiency at 50, 60, 70, 80, 90, and 100 percent of rated speed, over entire operating range of pump from shutoff to runout capacity. Indicate separately head, shaft power, NPSH required, and efficiency at rated capacity.
         2) Manufacturer’s preferred operating region (POR) and allowable operating region (AOR) in accordance with ANSI/HI 9.6.3 recommendations.

3) Manufacturer's recommended minimum continuous flow.

d. Detailed drawings showing equipment dimensions, arrangement, assembly, including locations and type of connections and weights of major equipment and components.

e. Detailed intermediate shafting drawings with dimensional information and materials of construction.

f. Pump and motor foundation drawings including dimensions, reinforcing steel details, and anchor bolt locations.

g. Modifications, if required, to existing pump access platform.

h. Power and control wiring diagrams, including terminals and numbers.

i. Complete motor nameplate data, as required by NEMA and CSA, motor manufacturer, and including any motor modifications.

j. Factory finish system.

C. Informational Submittals:

1. Certificates:

a. Manufacturer's Certificate of Compliance, in accordance with Section 01 43 33, Contractor Field Services, certifying that factory finish system is identical to requirements specified herein.

b. Manufacturer's Certificate of Proper Installation, in accordance with Section 01 43 33, Contractor Field Services.

2. Vendor Design Data (to be submitted at time of Shop Drawing submission):

a. Bearing life calculations confirming compliance with specified L10 bearing life requirement.

b. Intermediate shafting certified torsional analyses and lateral critical calculations.

c. Dynamic analysis report.

3. Manufacturer's Instructions:

a. Special shipping, storage and protection, and handling instructions.

b. Manufacturer's printed installation instructions.

c. Suggested spare parts list to maintain equipment in service for period of 1 year and 5 years.

d. List of special tools, materials, and supplies furnished with equipment for use prior to and during startup and for future maintenance.

4. Operation and Maintenance Data: As specified in Section 01 78 23, Operation and Maintenance Data.

5. Statements of Qualification (to be submitted at time of Shop Drawing submission):

a. Qualifications of company performing dynamic analysis.

6. Test and Inspection Reports:

a. Factory Functional and Performance Test Reports.

b. Field Functional and Performance Test Reports.

c. Intermediate shafting alignment report.

1.4 PUMP AND MOTOR FOUNDATION DESIGN

A. Pump vendor is responsible for design of reinforced concrete foundations for following pumps:

1. Pump P-G102, Raw Sewage Pump.

B. Design pump and motor foundations, including anchorage of equipment to concrete foundation and anchorage of foundation to existing building structure, to suit requirements of equipment supplied and to meet requirements of ANSI/HI standards. Incorporate support for pump suction elbow in design of pump foundation.

C. Modify existing pump access platform as required to suit installation of pump and foundation.

D. Shop Drawings for foundations and access platform modifications shall be signed and sealed by Professional Engineer licensed in Province of Manitoba.

1.5 DYNAMIC ANALYSIS

A. Prior to manufacture of pump and motor, pump vendor shall have dynamic analysis, as specified below and in accordance with ANSI/HI 9.6.8, performed for following pumps:
   1. P-G102, Raw Sewage Pump.

B. Dynamic analysis model shall be constructed using commercially available FEA computer software such as Ansys, Cosmos/M, or equivalent. Incorporate effects of all system components necessary to accurately model pump structure. Analyze structure in running (wet) condition and consider effect of water mass in piping and wet wells. Incorporate motor reed critical frequency and mass elastic diagram information provided by motor manufacturer.

C. Qualifications of Company Performing Analysis: Minimum 10 years of experience in field of rotordynamic analysis and structural dynamic analysis using FEA methods, for rotating machinery including large centrifugal pump and motor units of comparable size and complexity, using numerical analysis computer software.

D. Lateral Rotordynamic Analysis:
   1. To determine potential for critical lateral frequency occurring within normal operating speed range of pump, perform Level 2 lateral dynamic analysis in accordance with ANSI/HI 9.6.8 Table 9.6.8.4.
   2. Pump shall be subject to undamped natural frequency analysis as minimum in accordance with ANSI/HI 9.6.8 Section 9.6.8.6.2.1.1.
   3. Minimum frequency separation margin obtained by analysis shall be plus or minus 15 percent.
   4. Identify lateral critical speeds for both pump and motor shafts and intermediate shafting.
   5. Include both dry and wet impeller cases.
   6. Provide critical speed map demonstrating that a critical speed does not occur below 1.25 times maximum rated speed of pump and motor, and does not occur between 0.75 times blade pass frequency associated with minimum operating speed and 1.25 times blade pass frequency associated with maximum operating speed.
   7. Calculate damped vibration response to unbalance for shafts and compare with applicable specified requirements to verify acceptable vibration amplitudes.

E. Torsional Rotordynamic Analysis:
   1. To determine potential for critical torsional frequency occurring within normal operating speed range of pump, perform Level 2 torsional dynamic analysis in accordance with ANSI/HI 9.6.8 Table 9.6.8.4.

2. Undamped torsional natural frequency analysis shall be performed in accordance with ANSI/HI 9.6.8 Section 9.6.8.6.2.2.1.
3. Minimum frequency separation margin obtained by analysis shall be plus or minus 15 percent.
4. Calculate system torsional natural frequencies, corresponding mode shapes, and steady-state and transient torsional response.
5. Include intermediate shafting in analysis.
6. Provide interference diagram demonstrating the following:
   a. No critical speeds occur between 0.8 times minimum operating speed and 1.2 times maximum rated speed of pump and motor.
   b. No critical speed associated with mechanical running speed (one times shaft speed) excitation frequency occurs below 1.2 times maximum rated speed.
7. Forced Response Analysis:
   a. Perform forced response analysis for all critical speeds determined to occur below 1.2 times maximum rated operating speed.
   b. Expected excitation frequencies for steady-state operation include, as a minimum but not limited to, electrical line frequency, two times electrical line frequency, current modulating frequencies produced by the variable frequency drive, mechanical running speed (one times shaft speed), two times mechanical running speed (two times shaft speed), and blade pass frequency.
   c. Confirm that calculated steady-state and transient dynamic torsional shaft stresses and coupling torques are below allowable levels, such that motor shaft, pump shaft, and associated drive train components are capable of unlimited number of startup and shutdown cycles associated with 0 rpm up to maximum rated speed.
   d. Determine allowable stresses (endurance limits) for pump and motor shafts in accordance with ASME B106.1 or MIL STD 167, whichever is lower.
   e. Include safety factor of at least two in allowable stress levels and demonstrate stresses on Modified Goodman Diagram.
   f. Confirm that dynamic torque in couplings is in accordance with coupling manufacturer’s requirements.

F. Structural Dynamic Analysis:
1. To determine potential for critical structural natural frequency occurring within normal operating speed range of pump, perform Level 2 structural dynamic analysis in accordance with ANSI/HI 9.6.8 Table 9.8.6.4.
2. Pump and supporting structure (baseplate) in combination shall be subject to shaft-end deflection analysis (static structural FEA) in accordance with ANSI/HI 9.6.8 Section 9.6.8.6.2.3.1.
3. Pump and supporting structure (baseplate) in combination shall also be subject to natural frequency analysis (modal FEA) in accordance with ANSI/HI 9.6.8 Section 9.6.8.6.2.3.2.
4. Pump structure shall be subject to natural frequency analysis (modal FEA) in accordance with ANSI/HI 9.6.8 Section 9.6.8.6.2.3.3.
5. Minimum frequency separation margin obtained by analysis shall be plus or minus 15 percent.
6. As a minimum, include pump, motor, fabricated support, and all other critical components in model.

7. Confirm that minimum structural natural frequency of complete pump and motor assembly is at least 1.25 times maximum rated speed of pump and motor, and does not occur between 0.75 times blade pass frequency associated with minimum operating speed and 1.25 times blade pass frequency associated with maximum operating speed.
8. Verification of calculated natural frequencies of pump and motor assembly shall be performed by pump manufacturer, or pump manufacturer's authorized representative, when unit is fully installed at Project Site.

G. Motor Reed Critical Frequency:
1. Pump vendor shall obtain expected motor reed critical frequency (RCF), motor mass, and location of center of gravity of motor from motor manufacturer. Accuracy of this information shall be within plus or minus10 percent of values that would be obtained by verification methods. The plus or minus 10 percent range of variance shall be used in structural dynamic analysis.
2. After manufacture but before shipment of motor, motor manufacturer shall verify as-built motor RCF, motor mass, and location of center of gravity at factory. RCF shall be verified by impact test in two perpendicular planes, to be denoted relative to conduit box location, when motor is rigidly attached to rigid foundation mass at least 10 times as stiff and 10 times as massive as motor itself.
3. Motor manufacturer shall document as-built RCF, motor mass, and center of gravity location in report and provide copy of report to pump vendor before shipment of motor.
4. If one or more of as-built values for RCF, motor mass, or center of gravity location are outside of allowable plus or minus 10 percent tolerance, pump vendor shall address discrepancy to determine any design changes that are required to prevent harmful natural frequencies in pump/motor structure, and incorporate any such changes in design and manufacture of equipment at no cost to the City.

H. Dynamic Analysis Report:
1. Prepare and submit report describing analysis procedures, results, and recommendations, prior to manufacture of pump and motor.
2. Report to include following information as a minimum:
   a. Complete description of system included in analysis.
   b. Name and version of computer program(s) used.
   c. Assumptions made in order to model system.
   d. Schematic diagram of model depicting nodes and elements.
   e. Model input data including:
      1) Node coordinates.
      2) Material properties.
      3) Element types, characteristics, and connectivities (presented graphically).
      4) Specified displacements and/or excitation force spectra.
   f. Supporting data and calculations.
   g. Motor reed frequency data (or dynamic analysis, if required).
   h. Motor critical speed data from manufacturer.
   i. Shafting critical speed data from manufacturer.
   j. Pump and drive equipment torsional data from respective manufacturer.
   k. Shafting or coupling torsional data from manufacturer.
   l. Anticipated excitation frequencies.

m. Analysis results including all significant natural frequencies, all significant torsional critical speeds, and description of corresponding mode shapes.
n. Campbell diagram depicting plot of excitation frequency versus operating speed, including:
   1) Plot of all excitation sources that are multiples of operating speed, properly labeled.
   2) Plot of natural frequencies versus operating speed.
   3) Plot of torsional natural frequencies versus operating speed.
   4) Areas of interference between 1) and 2) above, and between 1) and 3) above, clearly identified, or lack of likely resonance indicated.
o. Interpretation of results and recommendations, including recommendations for appropriate corrective action.

3. Report to be signed and sealed by licensed Professional Engineer.

1.6 EXTRA MATERIALS

A. Furnish, tag, and box for shipment and storage the following extra materials for each set of pumps of the same make and model:

Item	Quantity
Bearings	One complete set
Gaskets and O-ring seals	One complete set
Keys, dowels, pins, etc.	One complete set
Shaft sleeve	One
Mechanical seal	One
Impeller	One
Impeller shaft	One
Wear rings	One complete set
Lubricants	One year supply
Any special tools required for routine maintenance	One complete set

B. Delivery: In accordance with Section 01 61 00, Common Product Requirements.

PART 2 PRODUCTS

2.1 GENERAL

A. Pumps shall be of a standard and industry proven design, designed and sized for the full range of operating duties and conditions specified, and the selected units shall meet the specified requirements of minimum service life.

B. Coordinate pump requirements with motor manufacturer and be responsible for pump and motor requirements.

C. Where adjustable speed drives are required, coordinate pump and motor requirements with adjustable speed controller. Refer to Section 26 29 23, Variable Frequency Drives.

D. Design equipment, anchorage, and support systems for vertical and lateral loading in accordance with NBC.

2.2 MANUFACTURERS

A. Refer to Pump Data Sheets and Motor Data Sheets at end of section.

B. No “or-equal” or substitute products will be considered.

2.3 CONDITIONS OF SERVICE

A. Refer to Pump Data Sheets and Motor Data Sheets at end of section.

B. Pump P-G102, Raw Sewage Pump:
   1. Pump P-G102 will replace an existing pump that is to be removed. Provide new reinforced concrete foundations for pump and motor. Modify existing intermediate shafting support structure as required to suit intermediate shafting for new pump.
   2. Discharge piping for pump P-G102 is not equipped with check valve to prevent reverse flow through pump when pump stops. Pump, motor, and intermediate shafting shall be capable of withstanding, without damage, full reverse rotative speed caused by subjecting pump to reverse flow calculated based on rated static head shown in Pump Data Sheet.

2.4 PERFORMANCE REQUIREMENTS

A. Refer to Pump Data Sheets and Motor Data Sheets at end of section.

B. Specified operating range of each pump shall be entirely within manufacturer’s recommended allowable operating region of pump performance curve.

C. Pump and motor shall be suitable for continuous operation at any flow-head point within specified operating range.

D. Rated capacity shall be between 70 percent and 120 percent of flow at best efficiency point (BEP) at rated speed.

E. Pump performance curve shall having continuously rising head characteristic from run-out to shutoff.

F. Maximum required shaft power at any point on pump performance curve at maximum speed shall not exceed 90 percent of motor rated (nameplate) power, excluding motor service factor.

G. Assembled pumping unit, including pump, motor, and intermediate shafting, shall be free from critical speeds or harmful torsional vibrations at all speeds within specified operating range.

2.5 PUMP DESIGN

A. General:
1. Heavy-duty, solids handling, non-clog, dry pit design.
2. Configuration: See Pump Data Sheets.
3. See Drawings for pump orientation and rotation.
4. Designed to operate continuously at any point within specified operating range of performance curve without cavitation, overheating, or excessive vibration.

B. Casing:
1. Back pullout design allowing for removal of rotating element without disturbing piping connections.
2. Heavy wall, one-piece volute construction with integral discharge flange and smooth fluid passages. Provide drilled and tapped volute priming and drain connections.
3. Provide hand-hole for cleanout purposes at volute centerline located to provide access to interior of pump.
4. Suction and Discharge Flanges:
   a. Conforming to ASME B16.1, Class 125, flat face.
   b. Provide 12 mm gauge connection drilled and tapped in discharge flange.
5. Diffusion vanes or stationary guides are not allowed.
6. Renewable wear ring securely fastened at suction inlet.

C. Suction Nozzle:
1. Single-piece construction designed to provide even flow to impeller eye.
2. Flanged connection conforming to ASME B16.1, Class 125, flat face.
3. Provide hand-hole for inspection and cleanout.
4. Machine register fitted to casing.

D. Suction Elbow:
1. Provide steel reducing elbow for suction of pump P-G102.
2. Shop-fabricated from carbon steel pipe, minimum 12.7 mm wall thickness, in accordance with AWWA C208. Elbow to have 22.5-degree maximum miter deflection angle and minimum of five sections.
3. Pipe: ASTM A283/A283M Grade C or ASTM A285/A285M Grade C, sheet or coil, fabricated in accordance with AWWA C200 and ASTM A134, straight or spiral seam, conforming to ASME B36.10M.
4. Lining: Coal tar epoxy, AWWA C210, minimum two topcoats, applied by fitting manufacturer.
5. End Connections: Flanged, carbon steel, AWWA C207 Class D (1050 kPa), hub or ring type, flat face.
6. Gasket: Provide gasket between suction elbow and pump inlet, 3 mm thick red rubber (SBR), hardness 80 (Shore A), rated to 90 degrees C, conforming to ANSI B16.21, AWWA C207, and ASTM D1330 Grades 1 and 2.

7. Bolting: Carbon steel, ASTM A307 Grade A hex head bolts and ASTM A563 Grade A hex nuts.
8. Sized by pump manufacturer to suit pump suction requirements and piping sizes and centerline elevations shown on Drawings.

E. Back Cover:
1. Single-piece construction designed with integral stuffing box suitable for either packing or mechanical seal. Drilled and tapped 19 mm drain connection and large openings to allow easy access to stuffing box.
2. Designed for installation of minimum of five rings of packing and a split type lantern ring and a split type gland follower. Provide stuffing box with 6 mm minimum drilled and tapped connection for injection or venting of the stuffing box.
3. Machine register fitted to casing.

F. Bearing Frame and Bearings:
1. Removable, single-piece construction.
2. Machined for accurate bearing alignment and completely enclosing shaft between bearings.
3. Provide with retainer covers on inboard and outboard ends of frame equipped with lip-type grease seals to prevent entrance of contaminants.
4. Single or double row anti-friction bearings at inboard and outboard ends designed to take radial, weight, and thrust loads of pump and associated shafting loads. Bearings to be designed for ABMA L10 life of 100,000 hours at best efficiency point.
5. Provide jacking screws for adjustment of impeller.
6. Grease packed at factory and provided with grease fittings for bearing lubrication.

G. Impeller:
1. Single suction, enclosed, non-clogging type design with extremely smooth passageways to prevent clogging.
2. Single-piece construction.
3. Secure to shaft with stainless steel bolt, washer, and key to prevent loosening from either forward or reverse rotation.
4. Statically and dynamically balanced to assure vibration limits for pump are not exceeded.
5. Wear ring securely fastened to impeller with recessed stainless steel screws. Impeller wear ring to be a minimum of 50 Brinell softer than suction head wear ring.

H. Shaft:
1. Accurately machined over entire length and precision ground at bearing locations.
2. Designed to transmit full motor power with liberal safety factor to carry maximum loads imposed and to meet pump vibration requirements.
3. Provide keyways at both ends.

I. Shaft Sleeve:
1. Provide renewable shaft sleeve positively secured to shaft and fitted with O-ring to prevent leakage.
2. Hardened to minimum 450 BHN.

J. Mechanical Seal:
   1. Split cartridge type mechanical seal.
   2. Seal housing shall be suitable for both mechanical seal and packing.

K. Pump Base: Rugged, heavy duty, with ample strength for support of entire pump and imposed static and operational loads.

L. Intermediate Shafting and Steady Bearings:
   1. Constructed of sufficient diameter and properties to transmit 1.25 times full motor power including service factor.
   2. Complete with self-leveling, self-aligning universal joint at pump end, and coupled to meet motor connection requirements at motor end.
   3. Perform lateral and torsional critical analysis to determine coupling sizes, number of shafts, shafting diameters, and wall thicknesses to ensure critical speeds are at least 15 percent away from any exciting frequency. Exciting frequencies are one times specified operating speeds, number of vanes times specified operating speeds, and two times specified operating speeds.
   4. Complete with self-aligning, single-row, pillow block type steady bearings with means of connection to a rigid support. Provide means of grease lubrication at each steady bearing. Provide each lubrication point with stainless steel tubing routed to easily accessible location at service platform.
   5. Pump thrust bearing to be designed to carry weight of lower portion of universal joint assembly and any imposed lateral loads plus loads from pump rotating assembly and hydraulic thrust to meet required L10 bearing life.
   6. Motor thrust bearing to be designed to carry weight of universal joint extended shaft assembly and motor coupling to meet required L10 bearing life.
   7. Designed to allow lower shaft to be disconnected and swung to side to facilitate removal of pump rotating assembly.
   8. Provide shaft guards conforming to OHSA safety requirements, complete with banded openings to allow access to shaft lubrication fittings.

2.6 ELECTRIC MOTORS

A. Squirrel cage induction motor suitable for continuous duty.

B. Comply with requirements of Section 26 20 00, Low-Voltage AC Induction Motors.

C. For pumps with variable frequency drives, inverter duty rated suitable for operation with variable frequency drive specified in Section 26 29 23, Variable Frequency Drives.

D. Provide motor support pedestal, soleplates, and anchor bolts.

E. Refer to Motor Data Sheets at end of section for additional requirements.

2.7 VARIABLE FREQUENCY DRIVES

A. Provide variable frequency drives (VFDs) in accordance with the requirements of Section 26 29 23, Variable Frequency Drives. Equipment supplier is responsible for coordination of pumps, motors, and VFDs supplied.

2.8 INSTRUMENTATION AND CONTROLS

A. Where specified in Pump Data Sheets, provide sensors for pump and motor protection as follows:
   1. Pump Vibration: Sensor to provide continuous monitoring of vibration with 4-20 mA output proportional to vibration level.
   2. Pump Bearing Temperature: Two three-wire RTD sensors to provide continuous monitoring of inboard and outboard bearing temperatures.
   3. Motor Vibration: Sensor to provide continuous monitoring of vibration with 4-20 mA output proportional to vibration level.
   4. Motor Bearing Temperature: Two three-wire RTD sensors to provide continuous monitoring of upper and lower bearing temperatures.
   5. Motor Winding Temperature: Six three-wire RTD sensors, two per phase, embedded in stator windings to provide continuous monitoring of motor winding temperature.

2.9 ACCESSORIES

A. Lifting Lugs: Provide suitably attached for equipment assemblies and components weighing over 45 kg.

B. Equipment Identification Plates: In accordance with Section 40 05 53, Identification Labels for Equipment, Fabricated Tanks, Valves and Piping Systems.

C. Anchor Bolts: Type 316 stainless steel, sized by equipment manufacturer, and as specified in Section 05 50 00, Metal Fabrications (Basic).

2.10 FACTORY FINISHING

A. Manufacturer to prepare, prime, and finish coat in accordance with Section 09 90 00, Painting and Coating.

2.11 SOURCE QUALITY CONTROL

A. Factory tests shall be witnessed by Contract Administrator and/or the City. Provide minimum two weeks notice prior to commencement of testing.

B. Functional Tests:
   1. Test all pumps actually furnished.
   2. Test in accordance with latest edition of Hydraulic Institute Standards.
   3. Hydrostatic Test:
      a. Test pressure-containing components of pump including, as a minimum, pump casing, suction nozzle, and back cover.

b. Test pressure to be 125 percent of maximum shutoff head. Maintain test pressure for not less than 10 minutes.
c. No visible leakage is allowed.

4. Operating Temperatures: Temperature of bearing housing surfaces at rated speed shall not exceed manufacturer's recommendations.
5. Leakage: No visible leakage from mechanical seals, gaskets, and oil chambers is allowed.
6. Pump Vibration Test:
   a. Perform on pumps with motor size of 30 kW or larger.
   b. Test pump at rated speed in accordance with ANSI/HI 9.6.4.
   c. Dynamically balance rotating assembly to ISO 1940 Grade G6.3 or better prior to final assembly.
   d. Vibration shall not exceed 90 percent of limits specified in ANSI/HI 9.6.4.
7. Test Records and Report: Prepare and submit complete test report along with test records, certified correct by authorized representative of pump manufacturer, for each test performed.

C. Performance Tests:
1. Test all pumps actually furnished.
2. Test in accordance with ANSI/HI 14.6.
3. Flow, Head, Power, and Efficiency:
   a. Perform test at rated speed.
   b. Test results shall be evaluated against rated capacity, head, power, and efficiency shown on accepted Shop Drawings.
   c. Acceptance Criteria: ANSI/HI 14.6 Acceptance Grade 1U.
   d. Make any necessary modifications and adjustments and retest to bring pumps into compliance with acceptance criteria.
4. Test Records and Report: Prepare and submit complete test report along with test records, certified correct by authorized representative of pump manufacturer, for each test performed.

D. Motor Tests: In accordance with Section 26 20 00, Low-Voltage AC Induction Motors.

PART 3 EXECUTION

3.1 GENERAL

A. Information shown on Drawings is based on available record drawings and information from previous construction projects. Actual conditions may differ from Drawings. Field verify existing conditions prior to starting work.

B. New work shall fit within existing space available. Remove existing items as required to provide access for construction and reinstate to original condition. Repair any damage to existing items caused by Contractor's construction activities.

C. Where modifications to existing access platform are required to install new work, notify Contract Administrator prior to making any modifications. Submit proposed modifications for review.

D. Do not block access to items remaining in operation during construction. Coordinate with the City.

3.2 INSTALLATION

A. Install in strict accordance with manufacturer's printed instructions.

B. Level base by means of steel wedges (steel plates and steel shims). Wedge taper not to exceed 1 in 50. Use double wedges to provide level bearing surface for pump and driver base. Accomplish wedging such that there is no change in level or springing of baseplate when anchor bolts are tightened.

C. Adjust pump assemblies such that driving units are properly aligned, plumb, and level with driven units and all interconnecting shafts and couplings. Do not compensate for misalignment by use of flexible couplings.

D. After pump and driver have been set in position, aligned, and shimmed to proper elevation, grout space between bottom of baseplate and concrete foundation with poured, non-shrinking grout of proper category, as specified in Section 03 60 00, Grouting. Remove wedges after grout is set and pack void with grout.

E. Connect suction and discharge piping without imposing strain to pump flanges.

F. Anchor Bolts: Accurately place using equipment templates and as specified in Section 05 50 00, Metal Fabrications (Basic).

3.3 FIELD FINISHING

A. As specified in Section 09 90 00, Painting and Coating.

3.4 FIELD QUALITY CONTROL

A. Conduct testing as specified in Section 01 91 14, Equipment Testing and Facility Startup.

B. Functional Tests:
   1. Conduct on each pump.
   2. Alignment:
      a. Test complete assemblies for correct rotation, proper alignment and connection, and quiet operation.
      b. Verify alignment of complete extended shaft assembly, including angularity of pump and motor shafts, to confirm compliance with requirements of shafting manufacturer.
      c. Shafting manufacturer's authorized representative shall verify installation alignment and prepare and submit report confirming compliance.
   3. Operating Temperatures and Vibration: Monitor bearing areas on pump, motor, and intermediate shafting for abnormally high temperatures or vibrations.

4. Pump Vibration Test:
   a. Perform on pumps with motor size of 30 kW or larger.
   b. Test fully assembled pump at 20 percent speed increments over full operating speed range of pump, in accordance with ANSI/HI 9.6.4.
   c. Test with unit installed and in normal operation and discharging to connected piping system, and with actual building structures and foundations provided.
   d. Vibration shall not exceed 90 percent of limits specified in ANSI/HI 9.6.4.
   e. If units exhibit vibration in excess of the limits specified, adjust or modify as necessary to bring units into compliance. Units that cannot be adjusted or modified to conform as specified shall be replaced at no cost to the City.
   f. Provide instrumentation in current calibration to measure pump vibration at locations outlined in Hydraulic Institute Standards.
5. Test Records and Report: Prepare and submit complete test report along with test records.

C. Performance Test:
   1. Conduct on each pump.
   2. Perform under normal operating conditions at rated speed.
   3. Test for continuous 3-hour period without malfunction.
   4. Flow, Head, Power, and Efficiency:
      a. Measure and record pump flow rate, pump suction and discharge pressures (corrected for gauge elevation and velocity head), motor amperage, and voltage.
      b. Calculated differential head at rated capacity shall meet or exceed rated head specified.
      c. Calculated shaft power at rated capacity shall not exceed power shown on accepted factory test results.
   5. Use of plant instrumentation is allowed for tests. Provide additional instrumentation as required to obtain required test data.
   6. Test Records and Report: Prepare and submit complete test report along with test records.

3.5 MANUFACTURER'S SERVICES

A. Manufacturer's Representative: Present at Site or classroom designated by the City, for minimum person-days listed below, travel time excluded:
   1. Five person-days for installation assistance and inspection.
   2. Five person-days for functional and performance testing and completion of Manufacturer's Certificate of Proper Installation.
   3. Four person-days for pre-startup classroom or Site training.
   4. Two person-days for facility startup.
   5. Two person-days for post-startup training of the City's personnel. Training shall not commence until an accepted detailed lesson plan for each training activity has been reviewed by the City.

B. See Section 01 43 33, Contractor Field Services and Section 01 91 14, Equipment Testing and Facility Startup.

3.6 SUPPLEMENTS

A. The supplements listed below, following “End of Section”, are part of this Specification.
   1. Pump Data Sheets.
   2. Motor Data Sheets.

END OF SECTION

PUMP DATA SHEET NO. 1
RAW SEWAGE PUMP P-G102

Project: City of Winnipeg SEWPCC Upgrading/Expansion Project

Process/Facility: Raw Sewage Pumping Station

Service: Raw Sewage

Pump Name: Raw Sewage Pump No. 2

Equipment Tag Number(s): P-G102

Manufacturer and Model: (1) Flowserve/Worthington; MN Series

(2) Pentair/Fairbanks Nijhuis; 2400 Series

(3) _____

Number of Pumps Required: One	Pump Type: Non-clog dry pit centrifugal

Drive Type: ☐ Constant Speed ☐ Two Speed ☒ Variable Speed

LIQUID PROPERTIES	OPERATING CONDITIONS	SERVICE CONDITIONS
Name: Raw Sewage	Capacity (m^3/hr):	Ambient Temperature (°C):
Fluid Temperature (°C):	Rated: 5,167 2nd: 2,000 3rd: ±6,500	Min: 5 Max: 40
Min: 5 Normal: 10-20 Max: 25	Total Dynamic Head (m):	Relative Humidity (%):
Specific Gravity: 1.0-1.01 @ 20 °C	Rated: 17.0 2nd: 16.0 3rd: ±13.6	Min: 0 Max: 100
Vapour Pressure (kPa): 2.5 @ 20 °C	Static Head (m):	Altitude (m): 218.9
Viscosity (cp): 1.0-10 @ 20 °C	Rated: 15.8 2nd: 15.8 3rd: 12.3	☒ Indoor ☒ Heated
pH: 6.5-7.5	Static Suction Head/(Lift) (m):	☐ Outdoor ☐ Unheated
Total Suspended Solids (mg/L): Up to 300	Rated: 0.7 2nd: 0.7 3rd: 4.2	Area Electrical Classification:
Corrosion/Erosion/Abrasion Caused By:	NPSH Available (m):	Unclassified
Suspended grit and sand	Rated: 10.5 2nd: 10.6 3rd: 13.9	
Remarks:	Remarks:	Remarks:

PERFORMANCE REQUIREMENTS		
Max. Pump Speed (rpm): 510	Min. Shut-off Head (m): 22.0	Factory Testing:
Min. Pump Speed (rpm): TBD by mfr.	Min. Solids Passage (mm): 150	☒ Functional ☒ Performance
Speed at Rated Capacity (rpm): TBD by mfr.	Min. NPSH Margin Ratio: 1.5	Field Testing:
Min. Hyd. Eff. at Rated Capacity (%): 80	Min. Continuous Flow (m^3/hr): 2,000	☒ Functional ☒ Performance
Max. Power at Rated Capacity (kW): 300		Hydrostatic Test Pressure (kPag):
		125% of pump shutoff head

Remarks: _____

PUMP DATA SHEET NO. 1 (cont'd)
RAW SEWAGE PUMP P-G102

PUMP CONSTRUCTION DETAILS

Nozzles						Miscellaneous Connections		
	NPS (mm)	ANSI Class	Facing	Location			Size (mm)	Location
Suction	750 min.	125	FF	Bottom		Drain	19	
Discharge	600 min.	125	FF	Side		Vent	19	

Impeller:
Type: Mixed flow, non-clog
Diameter (in): TBD by mfr.

Configuration:
☐ Horizontal, frame-mounted
☐ Vertical, close-coupled
☒ Vertical, intermediate shafting

Casing:
☐ Single volute
☒ Tangential discharge
☐ Centerline discharge

Protection Sensors:
☒ Pump vibration
☒ Pump bearing temperature

Packing:
Type: n/a
Manufacturer: n/a
Size/No. of Rings: n/a

Mechanical Seal:
Type: As specified
Manufacturer: Mfr's standard
Model: Mfr's standard
Lubrication: Non-potable water

Direction of Rotation (from drive end):
☐ Clockwise
☒ Counter-clockwise

Bearings:
Radial (type/No.): Mfr's standard
Thrust (type/no.): Mfr's standard
Min. ABMA B-10 Life: 100,000 hrs
Lubrication: ☒ Grease ☐ Oil

Shaft Coupling:
Type: Intermediate shafting
Manufacturer: Mfr's standard
Model: Mfr's standard

Remarks: _____

MATERIALS OF CONSTRUCTION

Pump Casing: Cast iron, ASTM A48	Casing Wear Ring: Alloy or stainless steel	Shaft: Low alloy steel
Suction Nozzle: Cast iron, ASTM A48	Impeller Wear Ring: Alloy or stainless steel	Shaft Sleeve: Type 316 stainless steel
Impeller: Cast iron, ASTM A48		
Baseplate: Fabricated steel		

Remarks: Casing and impeller wear rings to be hardened to minimum 325 BHN.

ADDITIONAL REQUIREMENTS

MOTOR DATA SHEET NO. 1
RAW SEWAGE PUMP P-G102

Project: City of Winnipeg SEWPCC Upgrading/Expansion Project

Process/Facility: Raw Sewage Pumping Station

Service: Raw Sewage

Pump Name: Raw Sewage Pump No. 2

Equipment Tag Number(s): P-G102

Type: Squirrel-cage induction meeting requirements of NEMA MG 1.

Manufacturer: For multiple units of same type of equipment, furnish motors and accessories from single manufacturer.

Hazardous Location: ☐ Furnish motors for hazardous (classified) locations that conform to UL 674 and have an applied UL listing mark.

Motor Size (kW): 373 ☐ Min. ☐ Max.	Guaranteed Minimum Efficiency at Full Load (%): 95.0
Voltage: 575	Guaranteed Minimum Power Factor at Full Load (%): Mfr.'s Std.
Phase: 3	Service Factor (at rated max. ambient temperature): ☐ 1.0 ☒ 1.15
Frequency (Hz): 60	Enclosure Type: WP-I or WP-II
Synchronous Speed (rpm): TBD by mfr.	Mounting Type: ☐ Horizontal ☒ Vertical
☐ Constant Speed	Vertical Shaft: ☒ Solid ☐ Hollow
☐ Two-speed Speed (rpm): Slow _____ Fast _____	Vertical Thrust Capacity (N): Up _____ Down _____
☒ Multi-speed Speed (rpm): Min. _____ Max. _____	☒ Adjustable Speed Application (inverter duty rated) In accordance with Section 26 29 23, Variable Frequency Drives. Operating Speed Range: 50 to 100 % of rated speed
Variable Speed Load Classification: ☒ Variable Torque ☐ Constant Torque ☐ Constant Power	☒ Thermal Protection: RTDs, two per phase ☐ Space Heater: _____ volts, single phase ☒ Oversize main terminal (conduit) box for motors ☒ Terminal for connection of equipment grounding wire in each terminal box
Winding: ☒ One ☐ Two	
Protection Sensors: ☒ Motor Vibration ☒ Motor Winding Temperature ☒ Motor Bearing Temperature	

ADDITIONAL REQUIREMENTS

☒ In accordance with Section 26 20 00, Low Voltage AC Induction Motors.

Provide insulated bearing on non-driven end.

Provide separate terminal box for termination of motor protection sensor leads.

PUMP DATA SHEET NO. 2
SLUICE WATER PUMPS P-G221, P-G222

Project: City of Winnipeg SEWPCC Upgrading/Expansion Project

Process/Facility: Headworks

Service: Screenings Sluice Water

Pump Name: Sluice Water Pumps

Equipment Tag Number(s): P-G221, P-G222

Manufacturer and Model: (1) Flowserve/Worthington; MF Series

(2) Pentair/Fairbanks Nijhuis; 5400 Series

(3) _____

Number of Pumps Required: Two	Pump Type: Non-clog dry pit centrifugal

Drive Type: ☒ Constant Speed ☐ Two Speed ☐ Variable Speed

LIQUID PROPERTIES	OPERATING CONDITIONS	SERVICE CONDITIONS
Name: Grit tanks effluent	Capacity (L/min):	Ambient Temperature (°C):
Fluid Temperature (°C):	Rated: 1135 2nd: _____ 3rd: _____	Min: 5 Max: 40
Min: 5 Normal: 10-20 Max: 25	Total Dynamic Head (m):	Relative Humidity (%):
Specific Gravity: 1.0-1.01 @ 20 °C	Rated: 9.7 2nd: _____ 3rd: _____	Min: 0 Max: 100
Vapour Pressure (kPa): 2.5 @ 20 °C	Static Head (m):	Altitude (m): 229.5
Viscosity (cp): 1.0-5 @ 20 °C	Rated: 4.4 2nd: _____ 3rd: _____	☒ Indoor ☒ Heated
pH: 6.5-7.5	Static Suction Head/(Lift) (m):	☐ Outdoor ☐ Unheated
Total Suspended Solids (mg/L): Up to 200	Rated: 4.5 2nd: _____ 3rd: _____	Area Electrical Classification:
Corrosion/Erosion/Abrasion Caused By:	NPSH Available (m):	Unclassified
Suspended grit and sand	Rated: 14.3 2nd: _____ 3rd: _____	
Remarks:	Remarks:	Remarks:

PERFORMANCE REQUIREMENTS		
Max. Pump Speed (rpm): 1200	Min. Shut-off Head (m): 12.0	Factory Testing:
Min. Pump Speed (rpm): _____	Min. Solids Passage (mm): 75	☒ Functional ☒ Performance
Speed at Rated Capacity (rpm): _____	Min. NPSH Margin Ratio: 1.5	Field Testing:
Min. Hyd. Eff. at Rated Capacity (%): 65.0	Min. Continuous Flow (L/min): 500	☒ Functional ☒ Performance
Max. Power at Rated Capacity (kW): 3.0		Hydrostatic Test Pressure (kPag):
		125% of pump shut-off head

Remarks: _____

PUMP DATA SHEET NO. 2 (cont'd)
SLUICE WATER PUMPS P-G221, P-G222

PUMP CONSTRUCTION DETAILS

Nozzles						Miscellaneous Connections		
	NPS (mm)	ANSI Class	Facing	Location			Size (mm)	Location
Suction	100	125	FF			Drain		
Discharge	75 min.	125	FF			Vent		

Impeller:
Type: Non-clog
Diameter (in): TBD by mfr.

Configuration:
☒ Horizontal, frame-mounted
☐ Vertical, close-coupled
☐ Vertical, intermediate shafting

Casing:
☐ Single volute
☒ Tangential discharge
☒ Centerline discharge

Packing:
Type: n/a
Manufacturer: n/a
Size/No. of Rings: n/a

Mechanical Seal:
Type: As specified
Manufacturer: Mfr's standard
Model: Mfr's standard
Lubrication: Non-potable water

Bearings:
Radial (type/no.): Mfr's standard
Thrust (type/no.): Mfr's standard
Min. ABMA B-10 Life: 100,000 hrs
Lubrication: ☒ Grease ☐ Oil

Shaft Coupling:
Type: Mfr's standard
Manufacturer: Mfr's standard
Model: Mfr's standard

Remarks: _____

MATERIALS OF CONSTRUCTION

Pump Casing: Cast iron, ASTM A48	Casing Wear Ring: Alloy steel	Shaft: Low alloy steel
Impeller: Cast iron, ASTM A48	Impeller Wear Ring: Alloy steel	Shaft Sleeve: Type 316 stainless steel
Baseplate: Fabricated steel		

Remarks: Casing and impeller wear rings to be hardened to minimum 325 BHN.

ADDITIONAL REQUIREMENTS

MOTOR DATA SHEET NO. 2
SLUICE WATER PUMPS P-G221, P-G222

Project: City of Winnipeg SEWPCC Upgrading/Expansion Project

Process/Facility: Headworks

Service: Screenings Sluice Water

Pump Name: Sluice Water Pumps

Equipment Tag Number(s): P-G221, P-G222

Type: Squirrel-cage induction meeting requirements of NEMA MG 1.

Manufacturer: For multiple units of same type of equipment, furnish motors and accessories from single manufacturer.

Hazardous Location: ☐ Furnish motors for hazardous (classified) locations that conform to UL 674 and have an applied UL listing mark.

Motor Size (kW): 7.5 ☐ Min. ☐ Max.	Guaranteed Minimum Efficiency at Full Load (%): Per CAN/CSA-C390 Table 3
Voltage: 575	Guaranteed Minimum Power Factor at Full Load (%): Mfr.'s Std.
Phase: 3	Service Factor (at rated max. ambient temperature): ☐ 1.0 ☒ 1.15
Frequency (Hz): 60	Enclosure Type: TEFC
Synchronous Speed (rpm): 1200 max.	Mounting Type: ☒ Horizontal ☐ Vertical
☒ Constant Speed	Vertical Shaft: ☐ Solid ☐ Hollow
☐ Two-speed Speed (rpm): Slow _____ Fast _____	Vertical Thrust Capacity (N): Up _____ Down _____ ☐ Adjustable Speed Application (inverter duty rated) In accordance with Section 26 29 23, Variable Frequency Drives. Operating Speed Range: _____ to _____ % of rated speed
☐ Multi-speed Speed (rpm): Min. _____ Max. _____	
Variable Speed Load Classification: ☐ Variable Torque ☐ Constant Torque ☐ Constant Power	☐ Thermal Protection: _____ ☐ Space Heater: _____ volts, single phase ☒ Oversize main terminal (conduit) box for motors ☒ Terminal for connection of equipment grounding wire in each terminal box
Winding: ☒ One ☐ Two	

ADDITIONAL REQUIREMENTS

☒ In accordance with Section 26 20 00, Low Voltage AC Induction Motors.

PUMP DATA SHEET NO. 3
WAS FILTRATE PUMPS P-D451, P-D452

Project: City of Winnipeg SEWPCC Upgrading/Expansion Project

Process/Facility: Sludge Thickening

Service: Filtrate from WAS Rotary Drum Thickeners

Pump Name: WAS Filtrate Pumps

Equipment Tag Number(s): P-D451, P-D452

Manufacturer and Model: (1) Flowserve/Worthington; Model 4MF9A

(2) Pentair/Fairbanks Nijhuis; Model 4" 5422

(3) _____

Number of Pumps Required: Two	Pump Type: Non-clog dry pit centrifugal

Drive Type: ☐ Constant Speed ☐ Two Speed ☒ Variable Speed

LIQUID PROPERTIES	OPERATING CONDITIONS	SERVICE CONDITIONS
Name: WAS Filtrate	Capacity (m^3/hr):	Ambient Temperature (°C):
Fluid Temperature (°C):	Rated: 150 2nd: 20 3rd: 50	Min: 5 Max: 40
Min: 5 Normal: 10-20 Max: 25	Total Dynamic Head (m):	Relative Humidity (%):
Specific Gravity: 1.0-1.01 @ 20 °C	Rated: 8.2 2nd: 5.0 3rd: 12.0	Min: 0 Max: 100
Vapour Pressure (kPa): 2.5 @ 20 °C	Static Head (m):	Altitude (m): 228.0
Viscosity (cp): 1.0 @ 20 °C	Rated: 2.2 2nd: 3.7 3rd: 3.7	☒ Indoor ☒ Heated
pH: 6.5-7.5	Static Suction Head/(Lift) (m):	☐ Outdoor ☐ Unheated
Total Suspended Solids (mg/L): Up to 500	Rated: 4.9 2nd: 3.4 3rd: 3.4	Area Electrical Classification:
Corrosion/Erosion/Abrasion Caused By:	NPSH Available (m):	Unclassified
_____	Rated: 14.7 2nd: 13.2 3rd: 13.2	
Remarks: _____	Remarks: _____	Remarks: _____

PERFORMANCE REQUIREMENTS		
Max. Pump Speed (rpm): 1800	Min. Shut-off Head (m): 12	Factory Testing:
Min. Pump Speed (rpm): _____	Min. Solids Passage (mm): 75	☒ Functional ☒ Performance
Speed at Rated Capacity (rpm): TBD by mfr.	Min. NPSH Margin Ratio: 1.5	Field Testing:
Min. Hyd. Eff. at Rated Capacity (%): 60	Min. Continuous Flow (m^3/hr): 20	☒ Functional ☒ Performance
Max. Power at Rated Capacity (kW): 5.5		Hydrostatic Test Pressure (kPag):
		125% of pump shut-off head

Remarks: _____

PUMP DATA SHEET NO. 3 (cont'd)
WAS FILTRATE PUMPS P-D451, P-D452

PUMP CONSTRUCTION DETAILS

Nozzles						Miscellaneous Connections		
	NPS (mm)	ANSI Class	Facing	Location			Size (mm)	Location
Suction	150	125	FF			Drain		
Discharge	100	125	FF			Vent		

Impeller:
Type: Non-clog
Diameter (in): TBD by mfr.

Configuration:
☒ Horizontal, frame-mounted
☐ Vertical, close-coupled
☐ Vertical, intermediate shafting

Casing:
☐ Single volute
☐ Tangential discharge
☒ Centerline discharge

Packing:
Type: n/a
Manufacturer: n/a
Size/No. of Rings: n/a

Mechanical Seal:
Type: As specified
Manufacturer: Mfr's standard
Model: Mfr's standard
Lubrication: Flushless

Bearings:
Radial (type/no.): Mfr's standard
Thrust (type/no.): Mfr's standard
Min. ABMA B-10 Life: 100,000 hrs
Lubrication: ☒ Grease ☐ Oil

Shaft Coupling:
Type: Mfr's standard
Manufacturer: Mfr's standard
Model: Mfr's standard

Remarks: _____

MATERIALS OF CONSTRUCTION

Pump Casing: Cast iron, ASTM A48	Casing Wear Ring: Alloy steel	Shaft: Low alloy steel
Impeller: Cast iron, ASTM A48	Impeller Wear Ring: Alloy steel	Shaft Sleeve: Type 316 stainless steel
Baseplate: Fabricated steel		

Remarks: Casing and impeller wear rings to be hardened to minimum 325 BHN.

ADDITIONAL REQUIREMENTS

MOTOR DATA SHEET NO. 3
WAS FILTRATE PUMPS P-D451, P-D452

Project: City of Winnipeg SEWPCC Upgrading/Expansion Project

Process/Facility: Sludge Thickening

Service: Filtrate from WAS Rotary Drum Thickeners

Pump Name: WAS Filtrate Pumps

Equipment Tag Number(s): P-D451, P-D452

Type: Squirrel-cage induction meeting requirements of NEMA MG 1.

Manufacturer: For multiple units of same type of equipment, furnish motors and accessories from single manufacturer.

Hazardous Location: ☐ Furnish motors for hazardous (classified) locations that conform to UL 674 and have an applied UL listing mark.

Motor Size (kW): 7.5 ☐ Min. ☐ Max.	Guaranteed Minimum Efficiency at Full Load (%): Per CAN/CSA-C390 Table 3
Voltage: 575	Guaranteed Minimum Power Factor at Full Load (%): Mfr.'s Std.
Phase: 3	Service Factor (at rated max. ambient temperature): ☐ 1.0 ☒ 1.15
Frequency (Hz): 60	Enclosure Type: TEFC
Synchronous Speed (rpm): 1800 max.	Mounting Type: ☒ Horizontal ☐ Vertical
☐ Constant Speed	Vertical Shaft: ☐ Solid ☐ Hollow
☐ Two-speed Speed (rpm): Slow _____ Fast _____	Vertical Thrust Capacity (N): Up _____ Down _____
☒ Multi-speed Speed (rpm): Min. _____ Max. _____	☒ Adjustable Speed Application (inverter duty rated) In accordance with Section 26 29 23, Variable Frequency Drives. Operating Speed Range: 50 to 100 % of rated speed
Variable Speed Load Classification: ☒ Variable Torque ☐ Constant Torque ☐ Constant Power	☐ Thermal Protection: _____ ☐ Space Heater: _____ volts, single phase ☒ Oversize main terminal (conduit) box for motors ☒ Terminal for connection of equipment grounding wire in each terminal box
Winding: ☒ One ☐ Two	

ADDITIONAL REQUIREMENTS

☒ In accordance with Section 26 20 00, Low Voltage AC Induction Motors.

PUMP DATA SHEET NO. 4
FSL FILTRATE PUMPS P-D461, P-D462, P-D463, P-D464

Project: City of Winnipeg SEWPCC Upgrading/Expansion Project

Process/Facility: Sludge Thickening

Service: Filtrate from FSL Rotary Drum Thickeners

Pump Name: FSL Filtrate Pumps

Equipment Tag Number(s): P-D461, P-D462, P-D463, P-D464

Manufacturer and Model: (1) Flowserve/Worthington; Model 4MF9A

(2) Pentair/Fairbanks Nijhuis; Model 4" 5422

(3) _____

Number of Pumps Required: Four	Pump Type: Non-clog dry pit centrifugal

Drive Type: ☐ Constant Speed ☐ Two Speed ☒ Variable Speed

LIQUID PROPERTIES	OPERATING CONDITIONS	SERVICE CONDITIONS
Name: FSL Filtrate	Capacity (m^3/hr):	Ambient Temperature (°C):
Fluid Temperature (°C):	Rated: 75 2nd: 20 3rd: 130	Min: 5 Max: 40
Min: 5 Normal: 10-20 Max: 25	Total Dynamic Head (m):	Relative Humidity (%):
Specific Gravity: 1.0-1.01 @ 20 °C	Rated: 5.1 2nd: 3.0 3rd: 3.6	Min: 0 Max: 100
Vapour Pressure (kPa): 2.5 @ 20 °C	Static Head (m):	Altitude (m): 228.0
Viscosity (cp): 1.0 @ 20 °C	Rated: 0.2 2nd: 1.7 3rd: 1.7	☒ Indoor ☒ Heated
pH: 6.5-7.5	Static Suction Head/(Lift) (m):	☐ Outdoor ☐ Unheated
Total Suspended Solids (mg/L): Up to 500	Rated: 4.9 2nd: 3.4 3rd: 3.4	Area Electrical Classification:
Corrosion/Erosion/Abrasion Caused By:	NPSH Available (m):	Unclassified
_____	Rated: 14.7 2nd: 13.0 3rd: 13.0	
Remarks: _____	Remarks: _____	Remarks: _____

PERFORMANCE REQUIREMENTS		
Max. Pump Speed (rpm): 1200	Min. Shut-off Head (m): 6.5	Factory Testing:
Min. Pump Speed (rpm): _____	Min. Solids Passage (mm): _____	☒ Functional ☒ Performance
Speed at Rated Capacity (rpm): _____	Min. NPSH Margin Ratio: 1.5	Field Testing:
Min. Hyd. Eff. at Rated Capacity (%): 60	Min. Continuous Flow (m^3/hr): 20	☒ Functional ☒ Performance
Max. Power at Rated Capacity (kW): 2.0		Hydrostatic Test Pressure (kPag):
		125% of pump shut-off head

Remarks: _____

PUMP DATA SHEET NO. 4 (cont'd)
FSL FILTRATE PUMPS P-D461, P-D462, P-D463, P-D464

PUMP CONSTRUCTION DETAILS

Nozzles						Miscellaneous Connections		
	NPS (mm)	ANSI Class	Facing	Location			Size (mm)	Location
Suction	100 min.	125	FF			Drain		
Discharge	100	125	FF			Vent		

Impeller:
Type: Non-clog
Diameter (in): TBD by mfr.

Configuration:
☒ Horizontal, frame-mounted
☐ Vertical, close-coupled
☐ Vertical, intermediate shafting

Casing:
☐ Single volute
☐ Tangential discharge
☒ Centerline discharge

Packing:
Type: n/a
Manufacturer: n/a
Size/No. of Rings: n/a

Mechanical Seal:
Type: As specified
Manufacturer: Mfr's standard
Model: Mfr's standard
Lubrication: Flushless

Bearings:
Radial (type/no.): Mfr's standard
Thrust (type/no.): Mfr's standard
Min. ABMA B-10 Life: 100,000 hrs
Lubrication: ☒ Grease ☐ Oil

Shaft Coupling:
Type: Mfr's standard
Manufacturer: Mfr's standard
Model: Mfr's standard

Remarks: _____

MATERIALS OF CONSTRUCTION

Pump Casing: Cast iron, ASTM A48	Casing Wear Ring: Alloy steel	Shaft: Low alloy steel
Impeller: Cast iron, ASTM A48	Impeller Wear Ring: Alloy steel	Shaft Sleeve: Type 316 stainless steel
Baseplate: Fabricated steel		

Remarks: Casing and impeller wear rings to be hardened to minimum 325 BHN.

ADDITIONAL REQUIREMENTS

MOTOR DATA SHEET NO. 4
FSL FILTRATE PUMPS P-D461, P-D462, P-D463, P-D464

Project: City of Winnipeg SEWPCC Upgrading/Expansion Project

Process/Facility: Sludge Thickening

Service: Filtrate from FSL Rotary Drum Thickeners

Pump Name: FSL Filtrate Pumps

Equipment Tag Number(s): P-D461, P-D462, P-D463, P-D464

Type: Squirrel-cage induction meeting requirements of NEMA MG 1.

Manufacturer: For multiple units of same type of equipment, furnish motors and accessories from single manufacturer.

Hazardous Location: ☐ Furnish motors for hazardous (classified) locations that conform to UL 674 and have an applied UL listing mark.

Motor Size (kW): 3.7 ☐ Min. ☐ Max.	Guaranteed Minimum Efficiency at Full Load (%): Per CAN/CSA-C390 Table 3
Voltage: 575	Guaranteed Minimum Power Factor at Full Load (%): Mfr.'s Std.
Phase: 3	Service Factor (at rated max. ambient temperature): ☐ 1.0 ☒ 1.15
Frequency (Hz): 60	Enclosure Type: TEFC
Synchronous Speed (rpm): 1200 max.	Mounting Type: ☒ Horizontal ☐ Vertical
☐ Constant Speed	Vertical Shaft: ☐ Solid ☐ Hollow
☐ Two-speed Speed (rpm): Slow _____ Fast _____	Vertical Thrust Capacity (N): Up _____ Down _____
☒ Multi-speed Speed (rpm): Min. _____ Max. _____	☒ Adjustable Speed Application (inverter duty rated) In accordance with Section 26 29 23, Variable Frequency Drives. Operating Speed Range: 50 to 100 % of rated speed
Variable Speed Load Classification: ☒ Variable Torque ☐ Constant Torque ☐ Constant Power	☐ Thermal Protection: _____ ☐ Space Heater: _____ volts, single phase ☒ Oversize main terminal (conduit) box for motors ☒ Terminal for connection of equipment grounding wire in each terminal box
Winding: ☒ One ☐ Two	

ADDITIONAL REQUIREMENTS

☒ In accordance with Section 26 20 00, Low Voltage AC Induction Motors.

SECTION 43 21 13.23

HORIZONTAL END SUCTION CENTRIFUGAL PUMPS

EQUIPMENT AND COMPONENT NUMBERS

ID No.	Equipment Description
P-R140	Process Drain Pump
P-R501	Building Drainage Sump Pump
P-R502	Building Drainage Sump Pump
P-G521	Building Drainage Sump Pump
P-G522	Building Drainage Sump Pump
P-G531	Building Drainage Sump Pump
P-G532	Building Drainage Sump Pump
P-K501	Building Drainage Sump Pump
P-K502	Building Drainage Sump Pump
P-K253	HRC Drain Pump
P-S584	Building Drainage Sump Pump
P-S585	Building Drainage Sump Pump
P-S586	Building Drainage Sump Pump
P-S587	Building Drainage Sump Pump
P-S588	Building Drainage Sump Pump
P-S589	Building Drainage Sump Pump
P-S590	Building Drainage Sump Pump

PART 1 GENERAL

1.1 REFERENCES

A. The following is a list of standards which may be referenced in this section:
   1. American Bearing Manufacturers Association (ABMA).
   2. American Iron and Steel Institute (AISI).
   3. American Society for Testing and Materials (ASTM):
      a. A48/A48M, Standard Specification for Gray Iron Castings.
      b. A53/A53M, Standard Specification for Pipe, Steel, Black and Hot-Dipped, Zinc-Coated, Welded and Seamless.
      c. A276/A276M, Standard Specification for Stainless Steel Bars and Shapes.
      d. A576, Standard Specification for Steel Bars, Carbon, Hot-Wrought, Special Quality.
      e. B62, Standard Specification for Composition Bronze or Ounce Metal Castings.
      f. B148, Standard Specification for Aluminum-Bronze Sand Castings.
      g. B584, Standard Specification for Copper Alloy Sand Castings for General Applications.
   4. American Society of Mechanical Engineers (ASME):
      a. B16.1, Grey Iron Pipe Flanges and Flanged Fittings Classes 25, 125, and 250.
      b. B16.5, Pipe Flanges and Flanged Fittings NPS 1/2 Through NPS 24 Metric/Inch Standard.

c. B16.47, Large Diameter Steel Flanges NPS 26 Through NPS 60 Metric/Inch Standard.

5. Hydraulic Institute (ANSI/HI):
   a. 1.1-1.2, Rotodynamic Centrifugal Pumps for Nomenclature and Definitions.
   b. 9.6.4, Rotodynamic Pumps for Vibration Measurements and Allowable Values.
   c. 14.6, Rotodynamic Pumps for Hydraulic Performance Acceptance Tests.
6. Institute of Electrical and Electronics Engineers (IEEE): 112, Standard Test Procedure for Polyphase Induction Motors and Generators.
7. International Organization for Standardization (ISO): 10816-3, Mechanical vibration - Evaluation of machine vibration by measurements on non-rotating parts - Part 3: Industrial machines with nominal power above 15 kW and nominal speeds between 120 r/min and 15000 r/min when measured in situ.
8. National Electrical Manufacturer's Association (NEMA): MG 1, Motors and Generators.
9. 2010 National Building Code of Canada, with 2011 Manitoba Amendments (NBC).

1.2 DEFINITIONS

A. Terminology pertaining to pumping unit performance and construction shall conform to the ratings and nomenclature of the Hydraulic Institute Standards.

1.3 SUBMITTALS

A. Shop Drawings:
   1. Make, model, weight, and horsepower of each equipment assembly.
   2. Complete catalog information, descriptive literature, specifications, and identification of materials of construction.
   3. Performance data curves showing head, capacity, horsepower demand, and pump efficiency over the entire operating range of the pump, from shutoff to maximum capacity. Indicate separately the head, capacity, horsepower demand, overall efficiency, and minimum submergence required at the guarantee point.
   4. Detailed structural, mechanical, and electrical drawings showing the equipment dimensions, size, and locations of connections and weights of associated equipment.
   5. Power and control wiring diagrams, including terminals and numbers.
   6. Complete motor nameplate data, as defined by NEMA, motor manufacturer.
   7. Factory finish system data sheets.
   8. Submit written certification from professional engineer licensed in the Province of Manitoba stating that support systems, anchorage, and equipment have been designed according to requirements of the NBC for post-disaster structures at time of shop drawing submittals.

B. Quality Control Submittals:
   1. Factory Functional and Performance Test Reports and Log.
   2. Manufacturer's Certification of Compliance that the factory finish system is identical to the requirements specified herein.
   3. Special shipping, storage and protection, and handling instructions.
   4. Manufacturer's printed installation instructions.
   5. Manufacturer's Certificate of Proper Installation.

6. Suggested spare parts list to maintain the equipment in service for a period of 5 years. Include a list of special tools required for checking, testing, parts replacement, and maintenance with current price information.
7. List special tools, materials, and supplies furnished with equipment for use prior to and during startup and for future maintenance.
8. Operation and Maintenance Manual.

1.4 EXTRA MATERIALS

A. Furnish, tag, and box for shipment and storage the following extra materials for each set of pumps of the same make and model:

Item	Quantity
Bearings	One complete set
Gaskets and O-ring seals	One complete set
Keys, dowels, pins, etc.	One complete set
Shaft sleeve	One
Mechanical seal	One
Impeller	One
Impeller shaft	One
Lubricants	One year supply
Any special tools required for routine maintenance	One complete set

B. Delivery: In accordance with Section 01 61 00, Common Product Requirements.

PART 2 PRODUCTS

2.1 GENERAL

A. Pumps shall be of a standard and industry proven design, designed and sized for the full range of operating duties and conditions specified, and the selected units shall meet the specified requirements of minimum service life.

B. Coordinate pump requirements with drive manufacturer and be responsible for pump and drive requirements.

C. Where adjustable speed drives are required, furnish a coordinated operating system complete with pump, drive, and speed controller.

D. Design equipment, anchorage, and support systems for vertical and lateral loading in accordance with NBC.

2.2 MANUFACTURERS

A. Refer to Pump Data Sheets and Motor Data Sheets at end of section.

B. No “or-equal” or substitute products will be considered.

2.3 CONDITIONS OF SERVICE

A. Refer to Pump Data Sheets and Motor Data Sheets at end of section.

2.4 PERFORMANCE REQUIREMENTS

A. Refer to Pump Data Sheets and Motor Data Sheets at end of section.

B. Specified operating range of each pump shall be entirely within manufacturer’s recommended allowable operating region of pump performance curve.

C. Pump and motor shall be suitable for continuous operation at any flow-head point within specified operating range.

D. Rated capacity shall be between 70 percent and 120 percent of flow at best efficiency point (BEP) at rated speed.

E. Pump performance curve shall having continuously rising head characteristic from run-out to shutoff.

F. Maximum required shaft power at any point on pump performance curve at maximum speed shall not exceed 95 percent of motor rated (nameplate) power, excluding motor service factor.

2.5 PUMP DESIGN

A. The pump design shall consist of a single-stage, horizontal end suction centrifugal pump design with back pullout and a vertical discharge.

B. The pump shall incorporate an enclosed or semi-open impeller.

C. The pump casing shall be of the back pullout design and foot mounted to a fabricated steel baseplate.

D. Bearings shall conform to standards of American Bearing Manufacturers Association (ABMA). Bearings shall be designed to provide B-10 life of 50,000 hours minimum.

E. Provide common pump and motor base fabricated from minimum 10 mm thick steel, suitably reinforced to support full weight of pump and motor.

F. Shaft coupling shall be flexible spacer type to permit disassembly and inspection without disturbing pump or driver. Coupling guard shall be provided.

G. The pump shall be provided with a self-flushing single mechanical seal.

H. Pump suction and discharge flanges shall comply with ASME B16.1, Class 125.

2.6 PUMP DESIGN – SELF-PRIMING PUMPS

A. Pump shall be horizontal, self-priming, centrifugal type, designed specifically for handling raw, unscreened sewage.

B. Pump shall incorporate integral suction check valve to retain adequate liquid in pump casing to ensure automatic re-priming while operating at rated speed in completely open system. Pump shall not require external foot valve or priming device.

C. Coverplate design shall allow removal of complete rotating assembly as single unit without disturbing pump suction or discharge piping.

D. Provide separate oil-filled bearing and seal cavities complete with vent, fill and drain plugs, and oil level sight glass.

E. Impeller shall be semi-open, non-clog type with integral pump-out vanes on back shroud.

F. Bearings shall conform to standards of Anti-Friction Bearing Manufacturers Association (AFBMA). Bearings shall be designed to provide L-10 life of 50,000 hours minimum.

G. Provide common pump and motor base fabricated from minimum 10 mm thick steel, suitably reinforced to support full weight of pump and motor.

H. Shaft coupling shall be flexible spacer type to permit disassembly and inspection without disturbing pump or driver. Coupling guard shall be provided.

I. Provide grease-lubricated mechanical seal with stainless steel cage and spring and Viton elastomers.

J. Provide casing drain plug, minimum 25 mm NPT.

K. Pump suction and discharge flanges shall comply with ASME B16.1, Class 125.

2.7 ELECTRIC MOTORS

A. See Section 26 20 00, Low Voltage AC Induction Motors.

B. Refer to Data Sheet(s) at end of this Section. Where variable speed is indicated, the pump will incorporate a variable frequency drive and the pump motor shall be inverter duty.

C. Coordinate motor and VFD parameters to ensure compatibility. See Section 26 29 23, Variable Frequency Drives.

2.8 ACCESSORIES

A. Equipment Identification Plates: In accordance with Section 40 05 53, Identification Labels for Equipment, Fabricated Tanks, Valves and Piping Systems.

B. Lifting Lugs: Equipment weighing over 45 kg.

C. Anchor Bolts: Type 316 stainless steel, sized by equipment manufacturer, 13 mm minimum diameter, and as specified in Section 05 50 00, Metal Fabrications (Basic).

2.9 FACTORY FINISHING

A. Prepare, and prime, and finish coat in accordance with Section 09 90 00, Painting and Coatings.

2.10 SOURCE QUALITY CONTROL

A. Factory Tests and Adjustments: Test all equipment actually furnished.

B. Factory Test Report: Include test data sheets, curve test results, and performance test logs.

C. Pump Tests:
   1. Factory Functional Tests:
      a. Conduct on each pump.
      b. Manufacturer’s standard production tests.
      c. Hydrostatic Pressure Test: Test pump casing at 150 percent of shut-off head. Maintain test pressure for not less than 5 minutes.
      d. Vibration Test: In accordance with ANSI/HI 9.6.4.
   2. Factory Performance Tests:
      a. Conduct on each pump.
      b. In accordance with ANSI/HI 14.6, Acceptance Grade 2B.

D. Motor Tests:
   1. Conduct on each motor.
   2. In accordance with Section 26 20 00, Low Voltage AC Induction Motors.

PART 3 EXECUTION

3.1 INSTALLATION

A. Install in accordance with manufacturer’s printed instructions.

B. Level base by means of steel wedges (steel plates and steel shims). Wedge taper not greater than 6 mm per 300 mm. Use double wedges to provide a level bearing surface for the pump and driver base. Accomplish wedging so that there is no change of level or springing of the baseplate when the anchor bolts are tightened.

C. Adjust pump assemblies such that the driving units are properly aligned, plumb, and level with the driven units and all interconnecting shafts and couplings. Do not compensate for misalignment by use of flexible couplings.

D. After the pump and driver have been set in position, aligned, and shimmed to the proper elevation, grout the space between the bottom of the baseplate and the concrete foundation with a poured, non-shrinking grout of the proper category, as specified in Section 03 60 00, Grouting. Remove wedges after grout is set and pack void with grout.

E. Connect suction and discharge piping without imposing strain to pump flanges.

F. Anchor Bolts: Accurately place using equipment templates and as specified in Section 05500, Metal Fabrications (Basic).

G. Pipe baseplate drain to hub drain or scupper.

3.2 FIELD FINISHING

A. Equipment as specified in Section 09 90 00, Painting and Coatings.

3.3 FIELD QUALITY CONTROL

A. Pump Tests:
   1. Field Functional Tests:
      a. Conduct on each pump.
      b. Alignment: Test complete assemblies for correct rotation, proper alignment and connection, and quiet operation.
      c. Operating Temperatures: Monitor bearing areas on pump and motor for abnormally high temperatures.
      d. Vibration Test:
         1) In accordance with ANSI/HI 9.6.4.
         2) Test with units installed and in normal operation, and discharging to connected piping systems.
         3) If units exhibit vibration in excess of limits specified, adjust or modify as necessary. Units that cannot be adjusted or modified to conform as specified shall be replaced.
   2. Field Performance Tests:
      a. Conduct on each pump.
      b. Flow Output: Measured by plant instrumentation and storage volumes.
      c. Test for continuous 3 hour period.
      d. Test Report Requirements: In accordance with ANSI/HI 14.6.

B. Motor Tests:
   1. Conduct on each motor.
   2. Comply with requirements of Section 26 20 00, Low Voltage AC Induction Motors.

3.4 MANUFACTURER'S SERVICES

A. Manufacturer's Representative: Present at Site or classroom designated by The City, for minimum person-days listed below, travel time excluded:
   1. 2 person-days for installation assistance and inspection.
   2. 2 person-days for functional and performance testing and completion of Manufacturer's Certificate of Proper Installation.
   3. 2 person-days for prestartup classroom or Site training.
   4. 2 person-days for facility startup.
   5. 2 person-days for post-startup training of The City's personnel. Training shall not commence until an accepted detailed lesson plan for each training activity has been reviewed by Contract Administrator.

B. See Section 01 43 33, Contractor Field Services and Section 01 91 14, Equipment Testing and Facility Startup.

3.5 SUPPLEMENTS

A. The supplements listed below, following "End of Section," are a part of this Specification.
   1. Pump Data Sheets.
   2. Motor Data Sheets.

PUMP DATA SHEET
BIOREACTORS DRAIN PUMP

Project: City of Winnipeg SEWPCC Upgrading/Expansion Project

Process/Facility: Bioreactors

Service: Bioreactors Drainage

Pump Name: Process Drain Pump

Equipment Tag Number(s): P-R140

Manufacturer and Model: (1) Gorman-Rupp Model V6A60-B/F

(2) _____

(3) _____

Number of Pumps Required: One	Pump Type: Centrifugal, end suction, self-priming

Drive Type: ☒ Constant Speed ☐ Two Speed ☐ Variable Speed

LIQUID PROPERTIES	OPERATING CONDITIONS	SERVICE CONDITIONS
Name: Mixed Liquor, sludge	Capacity (m^3/hr):	Ambient Temperature (°C):
Fluid Temperature (°C):	Rated: 200 2nd: ±240 3rd: _____	Min: 5 Max: 40
Min: 5 Normal: 10-20 Max: 25	Total Dynamic Head (m):	Relative Humidity (%):
Specific Gravity: 1.0-1.1 @ 20 °C	Rated: 9.4 2nd: ±8 3rd: _____	Min: 0 Max: 100
Vapour Pressure (kPa): 2.5 @ 20 °C	Static Head (m):	Altitude (m): 228
Absolute Viscosity (cp): 1.0-200 @ 20 °C	Rated: 8.3 2nd: 7.3 3rd: _____	☒ Indoor ☒ Heated
pH: 6.5-7.5	Static Suction Head/(Lift) (m):	☐ Outdoor ☐ Unheated
Total Suspended Solids (% by wt.): 0.1-5.0	Rated: (2.3) 2nd: 0.5 3rd: _____	Area Electrical Classification:
Corrosion/Erosion/Abrasion Caused By:	NPSH Available (m):	Unclassified
_____	Rated: 7.5 2nd: 10.3 3rd: _____	
Remarks: _____	Remarks: _____	Remarks: _____

PERFORMANCE REQUIREMENTS (manufacturer to supply missing data)

Max. Pump Speed (rpm): 960	Min. Shut-off Head (m): 15	Factory Testing:
Min. Pump Speed (rpm): 960	Min. Solids Passage (mm): 75	☒ Functional ☒ Performance
Speed at Rated Capacity (rpm): 960	Min. NPSH Margin Ratio: 1.5	Field Testing:
Min. Hyd. Eff. at Rated Capacity (%): 65	Min. Continuous Flow (m^3/hr): 100	☒ Functional ☒ Performance
Max. Power at Rated Capacity (kW): 11.2		Hydrostatic Test Pressure (kPag):
		150% of pump shut-off head

Remarks: _____

PUMP DATA SHEET (cont'd)
BIOREACTORS DRAIN PUMP

PUMP CONSTRUCTION DETAILS (manufacturer to supply missing data)

Nozzles						Miscellaneous Connections		
	NPS (mm)	ANSI Class	Facing	Location			Size (mm)	Location
Suction	200	125	FF	End		Drain		
Discharge	150	125	FF	Top		Vent		

Impeller:
Type: Open or semi-open, two vane
Diameter (in): TBD by mfr

Casing Mount:
☒ Horizontal ☐ Vertical
☐ Centerline ☐ Near Centerline
☒ Foot ☐ Bracket

Motor Coupling:
☐ Direct ☐ Line shaft
☒ V-belt (side) ☐ V-belt (overhead)

Vent and Drain Connections:
☐ Tapped and plugged

Suction and Discharge Gauge Connections:
☐ Tapped and plugged

Packing:
Type: n/a
Manufacturer: n/a
Size/No. of Rings: n/a

Mechanical Seal:
Type: Cartridge
Manufacturer: Mfr's standard
Model: Mfr's standard
Lubrication: Oil

Bearings:
Radial (type/no.): Mfr's standard
Thrust (type/no.): Mfr's standard
ABMA B-10 Life: Min. 50,000 hrs
Lubrication: ☐ Grease ☒ Oil

Shaft Coupling:
Type: Spacer
Manufacturer: Mfr's standard
Model: Mfr's standard

Remarks: Mechanical seal shall require no external source of cooling water.

MATERIALS OF CONSTRUCTION (manufacturer to supply missing data)

Pump Casing: Gray iron ASTM A48 Class 30	Impeller Wear Rings: n/a	Shaft: Carbon steel AISI 1215 or SST
Impeller: Ductile iron 65-45-12 or cast steel	Casing Wear Rings: n/a	Shaft Sleeve: Alloy steel or SST
Wear Plate: Carbon steel, AISI 1026		
Flap Valve: Buna-N or neoprene		Baseplate: Fabricated steel

Remarks:

ADDITIONAL REQUIREMENTS

Supply with the pump a Gorman Rupp Air Release Valve P/N GRP33-307 , Suction and Discharge Gauge Kit and Drain Kit

MOTOR DATA SHEET
BIOREACTORS DRAIN PUMP

Project: City of Winnipeg SEWPCC Upgrading/Expansion Project

Process/Facility: Bioreactors

Service: Bioreactors Drainage

Pump Name: Process Drain Pump

Equipment Tag Number(s): P-R140

Type: Squirrel-cage induction meeting requirements of NEMA MG 1.

Manufacturer: For multiple units of same type of equipment, furnish motors and accessories from single manufacturer.

Hazardous Location: ☐ Furnish motors for hazardous (classified) locations that conform to UL 674 and have an applied UL listing mark.

Motor Size (kW): 11.2 ☐ Min. ☐ Max.	Guaranteed Minimum Efficiency at Full Load (%): 91.0
Voltage: 575	Guaranteed Minimum Power Factor at Full Load (%): Mfr's standard
Phase: 3	Service Factor (at rated max. ambient temperature): ☐ 1.0 ☒ 1.15
Frequency (Hz): 60	Enclosure Type: TEFC
Synchronous Speed (rpm): 1800	Mounting Type: ☒ Horizontal ☐ Vertical
☒ Constant Speed	Vertical Shaft: ☐ Solid ☐ Hollow
☐ Two-speed Speed (rpm): Slow _____ Fast _____	Vertical Thrust Capacity (N): Up _____ Down _____ ☐ Adjustable Speed Application (inverter duty rated) See Section 26 29 23, Variable Frequency Drives. Operating Speed Range: _____ to _____ % of rated speed
☐ Multi-speed Speed (rpm): Min. _____ Max. _____	
Variable Speed Load Classification: ☐ Variable Torque ☐ Constant Torque ☐ Constant Power	☐ Thermal Protection: _____ ☐ Space Heater: _____ volts, single phase ☒ Oversize main terminal (conduit) box for motors ☒ Terminal for connection of equipment grounding wire in each terminal box
Winding: ☒ One ☐ Two	

ADDITIONAL REQUIREMENTS

☒ See Section 26 20 00, Low-Voltage AC Induction Motors.

SUMP PUMP DATA SHEET

Project: City of Winnipeg SEWPCC Upgrading/Expansion Project

Process/Facility: Bioreactors

Service: Sanitary Drainage

Pump Name: Sanitary Drainage Sump Pumps

Equip. Tag Number(s): P-R501, P-R502

Manufacturer and Model: (1) Gorman Rupp T3A3S-B/F -
(2) _____
(3) _____

No. Pumps Required: 2		
Drive Type: ☒ Constant ☐ Adjustable		
☒ Direct-Coupled ☐ Belt		
LIQUID	**OPERATING CONDITIONS**	**SERVICE CONDITIONS**
Name: Sanitary Drainage	Capacity (l/S):	Temp (°C): Max 40 Min 5
Pumping Temperature (°C):	Normal 7.57 Rated 7.76	Rel. Hum (%): Max 100 Min 0
Normal 10-20 Max 25 Min 5	Discharge Pressure (kPa):	Altitude (m): 227
Specific Gravity @ 1.0 (°C): 20	Suction Pressure (kPa):	☒ Indoor ☒ Heated
Viscosity (CP) @ 1.0 (°C): 20	Max -20 Rated -20	☐ Outdoor ☐ Unheated
pH: 6.5-7.5	Diff. Pressure (kPa): 189	Area Classification: Unclassified
Corrosion/Erosion/Abrasion Caused by:	Diff. Head (m): 19.3	Other:
	NPSH Available (m): 7.18	
Remarks:	Remarks:	Remarks:
PERFORMANCE REQUIREMENTS (manufacturer to supply missing data)		
Proposal Curve No.: T3A-B-1	Max. Head (kPa): 222	Factory Testing:
Speed (rpm): 1750	Max. Power (kW): 7.05	☒Required ☐Not Required
Efficiency (%):32	Max. Solid Size (mm): 63	
Rated Power (kW): 4.48		

Remarks:

Factory testing includes standard factory tests.

PUMP DATA SHEET (cont'd)
BIOREACTORS SUMP PUMPS

Equipment Tag Number(s): P-R501, P-R502

PUMP CONSTRUCTION DETAILS (manufacturer to supply missing data)

Nozzles						**Miscellaneous Connections**		
	Size (mm)	**Rating**	**Facing**	**Location (front/top)**			**Size**	**Location**
Suction	75	125	NPT	front		Drain		
Discharge	75	125	NPT	top		Vent	25	Discharge
						Pres. Gauge		
						Warm Up		

Discharge Orientation: Top	Impeller Diameter (mm):	Bearings (Type/No.):
	Rated 210 Max 222 Min 197	Radial: Mfr's Standard Thrust: Mfr's Standard
	Packing:	Lubrication Type:
	Manufacturer na	☒ Grease ☐ Oil
	Type Na	Coupling:
	Size/No. Rings Na	Manufacturer Mfr's standard
Hydro Test Pressure (kPa): _____	Mechanical Seal:	Type _____ Model _____
Field Testing: ☐ Not required	Type: As specified	Driver Half-Coupling Mounted by:
☐Required, functional and performance	Manufacturer: Mfr's standard	☒ Pump Mfr. ☐ Driver Mfr.
	Model: Mfr's standard	☐ Purchaser
	Lubrication: Grease	

Remarks: _____

MATERIALS (manufacturer to supply missing data)

Case: Gray Iron 30	Impeller: Ductile Iron 65-45-12	Shaft: Steel 1025
Case Wear Rings: Carbon Steel 1026	Impeller Wear Rings: Carbon Steel 1026	Shaft Sleeve: Alloy Steel 4130
Remarks: _____		Baseplate:
		Material Gray Iron 30

ADDITIONAL REQUIREMENTS

Self Priming Air Release Valve model GRP33-07

Pump and motor shall be shipped pre-assembled on structural steel base

Direct coupled drive arrangement complete with direct drive base plate and coupling guard

MOTOR DATA SHEET BIOREACTORS SUMP PUMPS	
Project: SEWPCC Upgrading/Expansion Project	
City: City of Winnipeg	
Equipment Name: Sanitary Drainage Sump Pumps	
Equipment Tag Number(s): P-R501, P-R502	
Type: Squirrel-cage induction meeting requirements of NEMA MG 1	
Manufacturer: For multiple units of the same type of equipment, furnish motors and accessories of a single manufacturer	
Hazardous Location: ☒ Furnish motors for hazardous (classified) locations that conform to UL 674 and have an applied UL listing mark	
Motor Kilowatts: 7.46	Guaranteed Minimum Efficiency at Full Load: 97 percent
Voltage: 575	Guaranteed Minimum Power Factor at Full Load: ____ percent
Phase: 3	Service Factor (@ rated max. amb. temp.): ☐ 1.0 ☒ 1.15
Frequency: 60	Enclosure Type: TEFC
Synchronous Speed: 1750 rpm	Mounting Type: ☒ Horizontal ☐ Vertical
☐ Multispeed, Two-Speed:	☐ Vertical Shaft: ☐ Solid ☐ Hollow
____ / ____ rpm	☐ Vertical Thrust Capacity (kg): Up ____ Down ____
☐ Constant kW	☐ Adjustable Speed Drive: See Section 26 29 23, Variable
☐ Variable Torque	Frequency Drives.
☐ Constant Torque	Operating Speed Range: ____ to ____% of Rated Speed
Winding: ☒ One ☐ Two	☐ Thermal Protection: _____
	☐ Space Heater: ____ volts, single phase
	☒ Oversize main terminal (conduit) box for motors
	☒ Terminal for connection of equipment grounding wire in each terminal box
Additional Motor Requirements: ☒ See Section 26 20 00, Low-Voltage AC Induction Motors	
Special Features:	
_____	
_____	

SUMP PUMP DATA SHEET

Project: City of Winnipeg SEWPCC Upgrading/Expansion Project

Process/Facility: Chemical and Electrical Building

Service: Sanitary Drainage

Pump Name: Sanitary Drainage Sump Pumps

Equip. Tag Number(s): P-C501, P-C502

Manufacturer and Model: (1) Gorman Rupp T3A3S-B/F -
(2) _____
(3) _____

No. Pumps Required: 2		
Drive Type: ☒ Constant ☐ Adjustable		
☒ Direct-Coupled ☐ Belt		
LIQUID	**OPERATING CONDITIONS**	**SERVICE CONDITIONS**
Name: Sanitary Drainage	Capacity (l/S):	Temp (°C): Max 40 Min 5
Pumping Temperature (°C):	Normal 7.57 Rated 7.76	Rel. Hum (%): Max 100 Min 0
Normal 10-20 Max 25 Min 5	Discharge Pressure (kPa):	Altitude (m): 227
Specific Gravity @ 1.0 (°C): 20	Suction Pressure (kPa):	☒ Indoor ☒ Heated
Viscosity (CP) @ 1.0 (°C): 20	Max -20 Rated -20	☐ Outdoor ☐ Unheated
pH: 6.5-7.5	Diff. Pressure (kPa): 189	Area Classification: Unclassified
Corrosion/Erosion/Abrasion Caused by:	Diff. Head (m): 19.3	Other:
	NPSH Available (m): 7.18	
Remarks:	Remarks:	Remarks:
PERFORMANCE REQUIREMENTS (manufacturer to supply missing data)		
Proposal Curve No.: T3A-B-1	Max. Head (kPa): 222	Factory Testing:
Speed (rpm): 1750	Max. Power (kW): 7.05	☒Required ☐Not Required
Efficiency (%):32	Max. Solid Size (mm): 63	
Rated Power (kW): 4.48		

Remarks:

Factory testing includes standard factory tests.

PUMP DATA SHEET (cont'd)
BIOREACTORS SUMP PUMPS

Equipment Tag Number(s): P-C501, P-C502

PUMP CONSTRUCTION DETAILS (manufacturer to supply missing data)

Nozzles						**Miscellaneous Connections**		
	Size (mm)	**Rating**	**Facing**	**Location (front/top)**			**Size**	**Location**
Suction	75	125	NPT	front		Drain		
Discharge	75	125	NPT	top		Vent	25	Discharge
						Pres. Gauge		
						Warm Up		

Discharge Orientation: Top	Impeller Diameter (mm):	Bearings (Type/No.):
	Rated 210 Max 222 Min 197	Radial: Mfr's Standard Thrust: Mfr's Standard
	Packing:	Lubrication Type:
	Manufacturer na	☒ Grease ☐ Oil
	Type Na	Coupling:
	Size/No. Rings Na	Manufacturer Mfr's standard
Hydro Test Pressure (kPa): _____	Mechanical Seal:	Type _____ Model _____
Field Testing: ☐ Not required	Type: As specified	Driver Half-Coupling Mounted by:
☐Required, functional and performance	Manufacturer: Mfr's standard	☒ Pump Mfr. ☐ Driver Mfr.
	Model: Mfr's standard	☐ Purchaser
	Lubrication: Grease	

Remarks: _____

MATERIALS (manufacturer to supply missing data)

Case: Gray Iron 30	Impeller: Ductile Iron 65-45-12	Shaft: Steel 1025
Case Wear Rings: Carbon Steel 1026	Impeller Wear Rings: Carbon Steel 1026	Shaft Sleeve: Alloy Steel 4130
Remarks:		Baseplate:
		Material Gray Iron 30

ADDITIONAL REQUIREMENTS

Self Priming Air Release Valve GRP33-07

Pump and motor shall be shipped pre-assembled on structural steel base

Direct coupled drive arrangement complete with direct drive base plate and coupling guard

MOTOR DATA SHEET BIOREACTORS SUMP PUMPS	
Project: SEWPCC Upgrading/Expansion Project	
City: City of Winnipeg	
Equipment Name: Sanitary Drainage Sump Pumps	
Equipment Tag Number(s): P-C501, P-C502	
Type: Squirrel-cage induction meeting requirements of NEMA MG 1	
Manufacturer: For multiple units of the same type of equipment, furnish motors and accessories of a single manufacturer	
Hazardous Location: ☒ Furnish motors for hazardous (classified) locations that conform to UL 674 and have an applied UL listing mark	
Motor Kilowatts: 7.46	Guaranteed Minimum Efficiency at Full Load: 97 percent
Voltage: 575	Guaranteed Minimum Power Factor at Full Load: ____ percent
Phase: 3	Service Factor (@ rated max. amb. temp.): ☐ 1.0 ☒ 1.15
Frequency: 60	Enclosure Type: TEFC
Synchronous Speed: 1750 rpm	Mounting Type: ☒ Horizontal ☐ Vertical
☐ Multispeed, Two-Speed:	☐ Vertical Shaft: ☐ Solid ☐ Hollow
____ / ____ rpm	☐ Vertical Thrust Capacity (kg): Up ____ Down ____
☐ Constant kW	☐ Adjustable Speed Drive: See Section 26 29 23, Variable
☐ Variable Torque	Frequency Drives.
☐ Constant Torque	Operating Speed Range: ____ to ____% of Rated Speed
Winding: ☒ One ☐ Two	☐ Thermal Protection: _____
	☐ Space Heater: ____ volts, single phase
	☒ Oversize main terminal (conduit) box for motors
	☒ Terminal for connection of equipment grounding wire in each terminal box
Additional Motor Requirements: ☒ See Section 26 20 00, Low-Voltage AC Induction Motors	
Special Features:	
_____	
_____	

SUMP PUMP DATA SHEET

Project: City of Winnipeg SEWPCC Upgrading/Expansion Project

Process/Facility: Grit Tanks 1 & 2

Service: Building Drainage

Pump Name: Building Drainage Sump Pumps

Equip. Tag Number(s): P-G521, P-G522

Manufacturer and Model: (1) Gorman Rupp 12C2-B
(2) _____
(3) _____

No. Pumps Required: 2		
Drive Type: ☒ Constant ☐ Adjustable		
☒ Direct-Coupled ☐ Belt		
LIQUID	**OPERATING CONDITIONS**	**SERVICE CONDITIONS**
Name: Building Drainage	Capacity (l/S):	Temp (°C): Max 40 Min 5
Pumping Temperature (°C):	Normal 4.49 Rated 4.49	Rel. Hum (%): Max 100 Min 0
Normal 10-20 Max 25 Min 5	Discharge Pressure (kPa): _____	Altitude (m): 227
Specific Gravity @ 1.0 (°C): 20	Suction Pressure (kPa):	☒ Indoor ☒ Heated
Viscosity (CP) @ 1.0 (°C): 20	Max _____ Rated _____	☐ Outdoor ☐ Unheated
pH: 6.5-7.5	Diff. Pressure (kPa): 112	Area Classification: Unclassified
Corrosion/Erosion/Abrasion Caused by:	Diff. Head (m): 11.4	Other: _____
suspended microsand	NPSH Available (m): 7.18	
Remarks: insignificant amounts of microsand	Remarks: _____	Remarks: _____
PERFORMANCE REQUIREMENTS (manufacturer to supply missing data)		
Proposal Curve No.: 12C-B-1	Max. Head (kPa): 134	Factory Testing:
Speed (rpm): 1750	Max. Power (kW): 1.66	☒Required ☐Not Required
Efficiency (%):39	Max. Solid Size (mm): 32	
Rated Power (kW): 1.28		

Remarks: _____

Factory testing includes standard factory tests.

PUMP DATA SHEET (cont'd)
HEADWORKS SUMP PUMPS

Equipment Tag Number(s): P-G521, P-G522

PUMP CONSTRUCTION DETAILS (manufacturer to supply missing data)

Nozzles						**Miscellaneous Connections**		
	Size (mm)	**Rating**	**Facing**	**Location (front/top)**			**Size**	**Location**
Suction	50	125	NPT	front		Drain		
Discharge	50	125	NPT	top		Vent	25	Discharge
						Pres. Gauge		
						Warm Up		

Discharge Orientation: Top	Impeller Diameter (mm):	Bearings (Type/No.):
	Rated 158 Max 158 Min 158	Radial: Mfr's Standard Thrust: Mfr's Standard
	Packing:	Lubrication Type:
	Manufacturer na	☒ Grease ☐ Oil
	Type Na	Coupling:
	Size/No. Rings Na	Manufacturer Mfr's standard
Hydro Test Pressure (kPa): _____	Mechanical Seal:	Type _____ Model _____
Field Testing: ☐ Not required	Type: As specified	Driver Half-Coupling Mounted by:
☐Required, functional and performance	Manufacturer: Mfr's standard	☒ Pump Mfr. ☐ Driver Mfr.
	Model: Mfr's standard	☐ Purchaser
	Lubrication: Grease	

Remarks: _____

MATERIALS (manufacturer to supply missing data)

Case: Gray Iron 30	Impeller: Ductile Iron 65-45-12	Shaft: Steel 1025
Case Wear Rings: Carbon Steel 1026	Impeller Wear Rings: Carbon Steel 1026	Shaft Sleeve: Alloy Steel 4130
Remarks:		Baseplate:
		Material Gray Iron 30

ADDITIONAL REQUIREMENTS

Horizontal, Bolted Pump Casing

Self Priming Air Release Valve GRP33-07

Pump and motor shall be shipped pre-assembled on structural steel base

Direct coupled drive arrangement complete with direct drive base plate and coupling guard

MOTOR DATA SHEET HEADWORKS SUMP PUMP	
Project: SEWPCC Upgrading/Expansion Project	
City: City of Winnipeg	
Equipment Name: Building Drainage Sump Pumps	
Equipment Tag Number(s): P-G521, P-G522	
Type: Squirrel-cage induction meeting requirements of NEMA MG 1	
Manufacturer: For multiple units of the same type of equipment, furnish motors and accessories of a single manufacturer	
Hazardous Location: ☐ Furnish motors for hazardous (classified) locations that conform to UL 674 and have an applied UL listing mark	
Motor Kilowatts: 1.5	Guaranteed Minimum Efficiency at Full Load: 97 percent
Voltage: 575	Guaranteed Minimum Power Factor at Full Load: ____ percent
Phase: 3	Service Factor (@ rated max. amb. temp.): ☐ 1.0 ☒ 1.15
Frequency: 60	Enclosure Type: TEFC
Synchronous Speed: 1750 rpm	Mounting Type: ☒ Horizontal ☐ Vertical
☐ Multispeed, Two-Speed:	☐ Vertical Shaft: ☐ Solid ☐ Hollow
____ / ____ rpm	☐ Vertical Thrust Capacity (kg): Up ____ Down ____
☐ Constant kW	☐ Adjustable Speed Drive: See Section 26 29 23, Variable
☐ Variable Torque	Frequency Drives.
☐ Constant Torque	Operating Speed Range: ____ to ____% of Rated Speed
Winding: ☒ One ☐ Two	☐ Thermal Protection: _____
	☐ Space Heater: ____ volts, single phase
	☒ Oversize main terminal (conduit) box for motors
	☒ Terminal for connection of equipment grounding wire in each terminal box
Additional Motor Requirements: ☒ See Section 26 20 00, Low-Voltage AC Induction Motors	
Special Features:	
_____	
_____	

SUMP PUMP DATA SHEET

Project: City of Winnipeg SEWPCC Upgrading/Expansion Project

Process/Facility: Grit and Screening

Service: Sanitary Drainage

Pump Name: Sanitary Drainage Sump Pumps

Equip. Tag Number(s): P-G531, P-G532

Manufacturer and Model: (1) Gorman Rupp T3A3S-B/F
(2) _____
(3) _____

No. Pumps Required: 2		
Drive Type: ☒ Constant ☐ Adjustable		
☒ Direct-Coupled ☐ Belt		
LIQUID	**OPERATING CONDITIONS**	**SERVICE CONDITIONS**
Name: Sanitary Drainage	Capacity (l/S):	Temp (°C): Max 40 Min 5
Pumping Temperature (°C):	Normal 4.73 Rated 4.73	Rel. Hum (%): Max 100 Min 0
Normal 10-20 Max 25 Min 5	Discharge Pressure (kPa):	Altitude (m): 227
Specific Gravity @ 1.0 (°C): 20	Suction Pressure (kPa):	☒ Indoor ☒ Heated
Viscosity (CP) @ 1.0 (°C): 20	Max -20 Rated -20	☐ Outdoor ☐ Unheated
pH: 6.5-7.5	Diff. Pressure (kPa): 119	Area Classification: Unclassified
Corrosion/Erosion/Abrasion Caused by:	Diff. Head (m): 12.1	Other:
	NPSH Available (m): 7.18	
Remarks:	Remarks:	Remarks:
PERFORMANCE REQUIREMENTS (manufacturer to supply missing data)		
Proposal Curve No.: T3A-B-2	Max. Head (kPa): 115	Factory Testing:
Speed (rpm): 1150	Max. Power (kW): 2.39	☒Required ☐Not Required
Efficiency (%):22	Max. Solid Size (mm): 63	
Rated Power (kW): 1.86		

Remarks:

Factory testing includes standard factory tests.

PUMP DATA SHEET (cont'd)
HEADWORKS SUMP PUMPS

Equipment Tag Number(s): P-G531, P-G532

PUMP CONSTRUCTION DETAILS (manufacturer to supply missing data)

Nozzles						**Miscellaneous Connections**		
	Size (mm)	**Rating**	**Facing**	**Location (front/top)**			**Size**	**Location**
Suction	75	125	NPT	front		Drain		
Discharge	75	125	NPT	top		Vent	25	Discharge
						Pres. Gauge		
						Warm Up		

Discharge Orientation: Top	Impeller Diameter (mm):	Bearings (Type/No.):
	Rated 222 Max 222 Min 197	Radial Mfr's Standard Thrust Mfr's Standard
	Packing:	Lubrication Type:
	Manufacturer na	☒ Grease ☐ Oil
	Type na	Coupling:
	Size/No. Rings na	Manufacturer _____
Hydro Test Pressure (kPa): _____	Mechanical Seal:	Type _____ Model _____
Field Testing: ☐ Not required	API Class Code _____	Driver Half-Coupling Mounted by:
☐Required, functional and performance	Manufacturer _____	☒ Pump Mfr. ☐ Driver Mfr.
	Model _____	☐ Purchaser
	Manufacturer Code _____	Gland Type/Material: _____
		Gland Plate Taps Required:
		☐ Quench ☐ Flush ☐ Drain ☐ Vent

Remarks: _____

MATERIALS (manufacturer to supply missing data)

Case: Gray Iron 30	Impeller: Ductile Iron 65-45-12	Shaft: Steel 1025
Case Wear Rings: Carbon Steel 1026	Impeller Wear Rings: Carbon Steel 1026	Shaft Sleeve: Alloy Steel 4130
Remarks: _____		Baseplate:
		Material Gray Iron 30

ADDITIONAL REQUIREMENTS

Self Priming Air Release Valve GRP33-07

Pump and motor shall be shipped pre-assembled on structural steel base

Direct coupled drive arrangement complete with direct drive base plate and coupling guard

MOTOR DATA SHEET HEADWORKS SUMP PUMPS	
Project: SEWPCC Upgrading/Expansion Project	
City: City of Winnipeg	
Equipment Name: Sanitary Drainage Sump Pumps	
Equipment Tag Number(s): P-G531, P-G532	
Type: Squirrel-cage induction meeting requirements of NEMA MG 1	
Manufacturer: For multiple units of the same type of equipment, furnish motors and accessories of a single manufacturer	
Hazardous Location: ☒ Furnish motors for hazardous (classified) locations that conform to UL 674 and have an applied UL listing mark	
Motor Kilowatts: 3.73	Guaranteed Minimum Efficiency at Full Load: 97 percent
Voltage: 575	Guaranteed Minimum Power Factor at Full Load: ____ percent
Phase: 3	Service Factor (@ rated max. amb. temp.): ☐ 1.0 ☒ 1.15
Frequency: 60	Enclosure Type: TEFC
Synchronous Speed: 1150 rpm	Mounting Type: ☒ Horizontal ☐ Vertical
☐ Multispeed, Two-Speed:	☐ Vertical Shaft: ☐ Solid ☐ Hollow
____ / ____ rpm	☐ Vertical Thrust Capacity (kg): Up ____ Down ____
☐ Constant kW	☐ Adjustable Speed Drive: See Section 26 29 2, Variable
☐ Variable Torque	Frequency Drives.
☐ Constant Torque	Operating Speed Range: ____ to ____% of Rated Speed
Winding: ☒ One ☐ Two	☐ Thermal Protection: _____
	☐ Space Heater: ____ volts, single phase
	☒ Oversize main terminal (conduit) box for motors
	☒ Terminal for connection of equipment grounding wire in each terminal box
Additional Motor Requirements: ☒ See Section 26 20 00, Low-Voltage AC Induction Motors	
Special Features:	
_____	
_____	

SUMP PUMP DATA SHEET

Project: City of Winnipeg SEWPCC Upgrading/Expansion Project

Process/Facility: High Rate Clarification

Service: Building Drainage

Pump Name: Building Drainage Sump Pumps

Equip. Tag Number(s): P-K501, P-K502

Manufacturer and Model: (1) Gorman Rupp 12C2-B
(2) _____
(3) _____

No. Pumps Required: 2		
Drive Type: ☒ Constant ☐ Adjustable		
☒ Direct-Coupled ☐ Belt		
LIQUID	**OPERATING CONDITIONS**	**SERVICE CONDITIONS**
Name: Building Drainage	Capacity (L/S):	Temp (°C): Max 40 Min 5
Pumping Temperature (°C):	Normal 4.42 Rated 4.42	Rel. Hum (%): Max 100 Min 0
Normal 10-20 Max 25 Min 5	Discharge Pressure (kPa): _____	Altitude (m): 227
Specific Gravity @ 1.0 (°C): 20	Suction Pressure (kPa):	☒ Indoor ☒ Heated
Viscosity (CP) @ 1.0 (°C): 20	Max _____ Rated _____	☐ Outdoor ☐ Unheated
pH: 6.5-7.5	Diff. Pressure (kPa): 108	Area Classification: Unclassified
Corrosion/Erosion/Abrasion Caused by:	Diff. Head (m): 11.0	Other: _____
suspended microsand	NPSH Available (m): 7.18	
Remarks: insignificant amounts of microsand	Remarks: _____	Remarks: _____
PERFORMANCE REQUIREMENTS (manufacturer to supply missing data)		
Proposal Curve No.: 12C-B-1	Max. Head (kPa): 135	Factory Testing:
Speed (rpm): 1750	Max. Power (kW): 1.67	☒Required ☐Not Required
Efficiency (%):39	Max. Solid Size (mm): 32	
Rated Power (kW): 1.28		

Remarks: _____

Factory testing includes standard factory tests.

PUMP DATA SHEET (cont'd)
BUILDING DRAINAGE SUMP PUMPS

Equipment Tag Number(s): P-K501, P-K502

PUMP CONSTRUCTION DETAILS (manufacturer to supply missing data)

Nozzles						**Miscellaneous Connections**		
	Size (mm)	**Rating**	**Facing**	**Location (front/top)**			**Size**	**Location**
Suction	50	125	NPT	front		Drain		
Discharge	50	125	NPT	top		Vent	25	Discharge
						Pres. Gauge		
						Warm Up		

Discharge Orientation: Top	Impeller Diameter (mm):	Bearings (Type/No.):
	Rated 158 Max 158 Min 197158	Radial: Mfr's Standard Thrust: Mfr's Standard
	Packing:	Lubrication Type:
	Manufacturer na	☒ Grease ☐ Oil
	Type Na	Coupling:
	Size/No. Rings Na	Manufacturer Mfr's standard
Hydro Test Pressure (kPa): _____	Mechanical Seal:	Type _____ Model _____
Field Testing: ☐ Not required	Type: As specified	Driver Half-Coupling Mounted by:
☐Required, functional and performance	Manufacturer: Mfr's standard	☒ Pump Mfr. ☐ Driver Mfr.
	Model: Mfr's standard	☐ Purchaser
	Lubrication: Grease	

Remarks: _____

MATERIALS (manufacturer to supply missing data)

Case: Gray Iron 30	Impeller: Ductile Iron 65-45-12	Shaft: Steel 1025
Case Wear Rings: Carbon Steel 1026	Impeller Wear Rings: Carbon Steel 1026	Shaft Sleeve: Alloy Steel 4130
Remarks:		Baseplate:
		Material Gray Iron 30

ADDITIONAL REQUIREMENTS

Self Priming Air Release Valve model GRP33-07

Pump and motor shall be shipped pre-assembled on structural steel base

Direct coupled drive arrangement complete with direct drive base plate and coupling guard

MOTOR DATA SHEET BUILDING DRAINAGE	
Project: City of Winnipeg SEWPCC Upgrading/Expansion Project	
Process/Facility: High Rate Clarification	
Equipment Name: Building Drainage Water Sump Pumps	
Equipment Tag Number(s): P-K501, P-K502	
Type: Squirrel-cage induction meeting requirements of NEMA MG 1	
Manufacturer: For multiple units of the same type of equipment, furnish motors and accessories of a single manufacturer	
Hazardous Location: ☐ Furnish motors for hazardous (classified) locations that conform to UL 674 and have an applied UL listing mark	
Motor Kilowatts: 1.5	Guaranteed Minimum Efficiency at Full Load: 97 percent
Voltage: 575	Guaranteed Minimum Power Factor at Full Load: ____ percent
Phase: 3	Service Factor (@ rated max. amb. temp.): ☐ 1.0 ☒ 1.15
Frequency: 60	Enclosure Type: TEFC
Synchronous Speed: 1750 rpm	Mounting Type: ☒ Horizontal ☐ Vertical
☐ Multispeed, Two-Speed:	☐ Vertical Shaft: ☐ Solid ☐ Hollow
____ / ____ rpm	☐ Vertical Thrust Capacity (kg): Up ____ Down ____
☐ Constant kW	☐ Adjustable Speed Drive: See Section 26 29 23, Variable
☐ Variable Torque	Frequency Drives.
☐ Constant Torque	Operating Speed Range: ____ to ____% of Rated Speed
Winding: ☒ One ☐ Two	☐ Thermal Protection: _____
	☐ Space Heater: ____ volts, single phase
	☒ Oversize main terminal (conduit) box for motors
	☒ Terminal for connection of equipment grounding wire in each terminal box
Additional Motor Requirements: ☒ See Section 26 20 00, Low-Voltage AC Induction Motors	
Special Features:	
_____	
_____	

PUMP DATA SHEET
HRC DRAIN PUMP P-K253

Project: City of Winnipeg SEWPCC Upgrading/Expansion Project

Process/Facility: High Rate Clarification

Service: HRC Drainage

Pump Name: HRC Drain Pump

Equipment Tag Number(s): P-K253

Manufacturer and Model: (1) Gorman-Rupp T6A-B

(2) Wemco 6-WSP

(3) _____

Number of Pumps Required: One	Pump Type: Centrifugal, end suction, self-priming

Drive Type: ☒ Constant Speed ☐ Two Speed ☐ Variable Speed

LIQUID PROPERTIES	OPERATING CONDITIONS	SERVICE CONDITIONS
Name: Grit effluent, HRC sludge	Capacity (m^3/hr):	Ambient Temperature (°C):
Fluid Temperature (°C):	Rated: 100 2nd: ±230 3rd: _____	Min: 5 Max: 40
Min: 5 Normal: 10-20 Max: 25	Total Dynamic Head (m):	Relative Humidity (%):
Specific Gravity: 1.0-1.05 @ 20 °C	Rated: 11.0 2nd: ±5.0 3rd: _____	Min: 0 Max: 100
Vapour Pressure (kPa): 2.5 @ 20 °C	Static Head (m):	Altitude (m): 228
Absolute Viscosity (cp): 1.0-100 @ 20 °C	Rated: 7.6 2nd: 0.0 3rd: _____	☒ Indoor ☒ Heated
pH: 6.5-7.5	Static Suction Head/(Lift) (m):	☐ Outdoor ☐ Unheated
Total Suspended Solids (% by wt.): 0.1-4.0	Rated: (2.3) 2nd: (1.7) 3rd: _____	Area Electrical Classification:
Corrosion/Erosion/Abrasion Caused By:	NPSH Available (m):	Unclassified
Suspended grit and microsand	Rated: 7.5 2nd: 7.5 3rd: _____	
Remarks:	Remarks:	Remarks:

PERFORMANCE REQUIREMENTS (manufacturer to supply missing data)

Max. Pump Speed (rpm): 1150	Min. Shut-off Head (m): 14	Factory Testing:
Min. Pump Speed (rpm): 1150	Min. Solids Passage (mm): 75	☒ Functional ☒ Performance
Speed at Rated Capacity (rpm): 1150	Min. NPSH Margin Ratio: 1.5	Field Testing:
Min. Hyd. Eff. at Rated Capacity (%): 45	Min. Continuous Flow (m^3/hr): 30	☒ Functional ☐ Performance
Max. Power at Rated Capacity (kW): 6.5		Hydrostatic Test Pressure (kPag):
		150% of pump shut-off head

Remarks: _____

PUMP DATA SHEET (cont'd)
HRC DRAIN PUMP P-K253

PUMP CONSTRUCTION DETAILS (manufacturer to supply missing data)

Nozzles						Miscellaneous Connections		
	NPS (mm)	ANSI Class	Facing	Location			Size (mm)	Location
Suction	150	125	FF	End		Drain		
Discharge	150	125	FF	Top		Vent		

Impeller:
Type: Open or semi-open, two vane
Diameter (in): TBD by mfr

Casing Mount:
☒ Horizontal ☐ Vertical
☐ Centerline ☐ Near Centerline
☒ Foot ☐ Bracket

Motor Coupling:
☒ Direct ☐ Line shaft
☐ V-belt (side) ☐ V-belt (overhead)

Vent and Drain Connections:
☐ Tapped and plugged

Suction and Discharge Gauge Connections:
☐ Tapped and plugged

Packing:
Type: n/a
Manufacturer: n/a
Size/No. of Rings: n/a

Mechanical Seal:
Type: Cartridge
Manufacturer: Mfr's standard
Model: Mfr's standard
Lubrication: Oil

Bearings:
Radial (type/no.): Mfr's standard
Thrust (type/no.): Mfr's standard
ABMA B-10 Life: Min. 50,000 hrs
Lubrication: ☐ Grease ☒ Oil

Shaft Coupling:
Type: Spacer
Manufacturer: Mfr's standard
Model: Mfr's standard

Remarks: Mechanical seal shall require no external source of cooling water.

MATERIALS OF CONSTRUCTION (manufacturer to supply missing data)

Pump Casing: Gray iron ASTM A48 Class 30	Impeller Wear Rings: n/a	Shaft: Carbon steel AISI 1215 or SST
Impeller: Ductile iron 65-45-12 or cast steel	Casing Wear Rings: n/a	Shaft Sleeve: Alloy steel or SST
Wear Plate: Carbon steel, AISI 1026		
Flap Valve: Buna-N or neoprene		

Remarks:

ADDITIONAL REQUIREMENTS

MOTOR DATA SHEET
HRC DRAIN PUMP P-K253

Project: City of Winnipeg SEWPCC Upgrading/Expansion Project

Process/Facility: High Rate Clarifiers

Service: HRC Drainage

Pump Name: HRC Drain Pump

Equipment Tag Number(s): P-K253

Type: Squirrel-cage induction meeting requirements of NEMA MG 1.

Manufacturer: For multiple units of same type of equipment, furnish motors and accessories from single manufacturer.

Hazardous Location: ☐ Furnish motors for hazardous (classified) locations that conform to UL 674 and have an applied UL listing mark.

Motor Size (kW): 7.5 ☐ Min. ☐ Max.	Guaranteed Minimum Efficiency at Full Load (%): 91.0
Voltage: 575	Guaranteed Minimum Power Factor at Full Load (%): Mfr's standard
Phase: 3	Service Factor (at rated max. ambient temperature): ☐ 1.0 ☒ 1.15
Frequency (Hz): 60	Enclosure Type: TEFC
Synchronous Speed (rpm): 1200	Mounting Type: ☒ Horizontal ☐ Vertical
☒ Constant Speed	Vertical Shaft: ☐ Solid ☐ Hollow
☐ Two-speed Speed (rpm): Slow _____ Fast _____	Vertical Thrust Capacity (N): Up _____ Down _____
☐ Multi-speed Speed (rpm): Min. _____ Max. _____	☐ Adjustable Speed Application (inverter duty rated) See Section 26 29 23, Variable Frequency Drives. Operating Speed Range: _____ to _____ % of rated speed
Variable Speed Load Classification: ☐ Variable Torque ☐ Constant Torque ☐ Constant Power	☐ Thermal Protection: _____ ☐ Space Heater: _____ volts, single phase ☒ Oversize main terminal (conduit) box for motors ☒ Terminal for connection of equipment grounding wire in each terminal box
Winding: ☒ One ☐ Two	

ADDITIONAL REQUIREMENTS

☒ See Section 26 20 00, Low-Voltage AC Induction Motors.

PUMP DATA SHEET
BUILDING DRAINAGE SUMP PUMPS

Project: City of Winnipeg SEWPCC Upgrading/Expansion Project

Process/Facility: Secondary Clarifier

Service: Building Drainage

Pump Name: Building Drainage Sump Pumps

Equip. Tag Number(s): P-S584, P-S585

Manufacturer and Model: (1) Gorman Rupp 12C2-B
(2) _____
(3) _____

No. Pumps Required: 2		
Drive Type: ☒ Constant ☐ Adjustable		
☒ Direct-Coupled ☐ Belt		
LIQUID	**OPERATING CONDITIONS**	**SERVICE CONDITIONS**
Name: Building Drainage	Capacity (L/S):	Temp (°C): Max 40 Min 5
Pumping Temperature (°C):	Normal 4.42 Rated 4.42	Rel. Hum (%): Max 100 Min 0
Normal 10-20 Max 25 Min 5	Discharge Pressure (kPa): _____	Altitude (m): 227
Specific Gravity @ 1.0 (°C): 20	Suction Pressure (kPa):	☒ Indoor ☒ Heated
Viscosity (CP) @ 1.0 (°C): 20	Max _____ Rated _____	☐ Outdoor ☐ Unheated
pH: 6.5-7.5	Diff. Pressure (kPa): 96	Area Classification: Unclassified
Corrosion/Erosion/Abrasion Caused by:	Diff. Head (m): 9.75	Other: _____
_____	NPSH Available (m): 7.18	
Remarks: _____	Remarks: _____	Remarks: _____
PERFORMANCE REQUIREMENTS (manufacturer to supply missing data)		
Proposal Curve No.: 12C-B-1	Max. Head (kPa): 135	Factory Testing:
Speed (rpm): 1750	Max. Power (kW): 1.67	☒Required ☐Not Required
Efficiency (%):39	Max. Solid Size (mm): 32	
Rated Power (kW): 1.28		

Remarks: Factory testing includes standard factory tests.

PUMP DATA SHEET (cont'd)
BUILDING DRAINAGE SUMP PUMPS

Equipment Tag Number(s): P-S584, P-S585

PUMP CONSTRUCTION DETAILS (manufacturer to supply missing data)

Nozzles						**Miscellaneous Connections**		
	Size (mm)	**Rating**	**Facing**	**Location (front/top)**			**Size**	**Location**
Suction	50	125	NPT	front		Drain		
Discharge	50	125	NPT	top		Vent	25	discharge
						Pres. Gauge		
						Warm Up		

Discharge Orientation: Top	Impeller Diameter (mm):	Bearings (Type/No.):
	Rated 158 Max 158 Min 158	Radial: Mfr's Standard Thrust: Mfr's Standard
	Packing:	Lubrication Type:
	Manufacturer na	☒ Grease ☐ Oil
	Type Na	Coupling:
	Size/No. Rings Na	Manufacturer Mfr's standard
Hydro Test Pressure (kPa): _____	Mechanical Seal:	Type _____ Model _____
Field Testing: ☐ Not required	Type: As specified	Driver Half-Coupling Mounted by:
☐Required, functional and performance	Manufacturer: Mfr's standard	☒ Pump Mfr. ☐ Driver Mfr.
	Model: Mfr's standard	☐ Purchaser
	Lubrication: Grease	

Remarks: _____

MATERIALS (manufacturer to supply missing data)

Case: Gray Iron 30	Impeller: Ductile Iron 65-45-12	Shaft: Steel 1025
Case Wear Rings: Carbon Steel 1026	Impeller Wear Rings: Carbon Steel 1026	Shaft Sleeve: Alloy Steel 4130
Remarks:		Baseplate:
		Material Gray Iron 30

ADDITIONAL REQUIREMENTS

Self Priming Air Release Valve model GRP33-07

Pump and motor shall be shipped pre-assembled on structural steel base

Direct coupled drive arrangement complete with direct drive base plate and coupling guard

MOTOR DATA SHEET BUILDING DRAINAGE	
Project: City of Winnipeg SEWPCC Upgrading/Expansion Project	
Process/Facility: Secondary Clarifier	
Equipment Name: Building Drainage Sump Pumps	
Equipment Tag Number(s): P-S584, P-S585	
Type: Squirrel-cage induction meeting requirements of NEMA MG 1	
Manufacturer: For multiple units of the same type of equipment, furnish motors and accessories of a single manufacturer	
Hazardous Location: ☐ Furnish motors for hazardous (classified) locations that conform to UL 674 and have an applied UL listing mark	
Motor Kilowatts: 1.5	Guaranteed Minimum Efficiency at Full Load: 97 percent
Voltage: 575	Guaranteed Minimum Power Factor at Full Load: ____ percent
Phase: 3	Service Factor (@ rated max. amb. temp.): ☐ 1.0 ☒ 1.15
Frequency: 60	Enclosure Type: TEFC
Synchronous Speed: 1750 rpm	Mounting Type: ☒ Horizontal ☐ Vertical
☐ Multispeed, Two-Speed:	☐ Vertical Shaft: ☐ Solid ☐ Hollow
____ / ____ rpm	☐ Vertical Thrust Capacity (kg): Up ____ Down ____
☐ Constant kW	☐ Adjustable Speed Drive: See Section 26 29 23, Variable
☐ Variable Torque	Frequency Drive.
☐ Constant Torque	Operating Speed Range: ____ to ____% of Rated Speed
Winding: ☒ One ☐ Two	☐ Thermal Protection: _____
	☐ Space Heater: ____ volts, single phase
	☒ Oversize main terminal (conduit) box for motors
	☒ Terminal for connection of equipment grounding wire in each terminal box
Additional Motor Requirements: ☒ See Section 26 20 00, Low-Voltage AC Induction Motors	
Special Features:	
_____	
_____	

PUMP DATA SHEET
BUILDING DRAINAGE SUMP PUMPS

Project: City of Winnipeg SEWPCC Upgrading/Expansion Project

Process/Facility: Secondary Clarifier

Service: Building Drainage

Pump Name: Building Drainage Sump Pumps

Equip. Tag Number(s): P-S586, P-S587

Manufacturer and Model: (1) Gorman Rupp 12C2-B
(2) _____
(3) _____

No. Pumps Required: 2		
Drive Type: ☒ Constant ☐ Adjustable		
☒ Direct-Coupled ☐ Belt		
LIQUID	**OPERATING CONDITIONS**	**SERVICE CONDITIONS**
Name: Building Drainage	Capacity (L/S):	Temp (°C): Max 40 Min 5
Pumping Temperature (°C):	Normal 4.42 Rated 4.42	Rel. Hum (%): Max 100 Min 0
Normal 10-20 Max 25 Min 5	Discharge Pressure (kPa): _____	Altitude (m): 227
Specific Gravity @ 1.0 (°C): 20	Suction Pressure (kPa):	☒ Indoor ☒ Heated
Viscosity (CP) @ 1.0 (°C): 20	Max _____ Rated _____	☐ Outdoor ☐ Unheated
pH: 6.5-7.5	Diff. Pressure (kPa): 96	Area Classification: Unclassified
Corrosion/Erosion/Abrasion Caused by:	Diff. Head (m): 9.75	Other: _____
_____	NPSH Available (m): 7.18	
Remarks: _____	Remarks: _____	Remarks: _____
PERFORMANCE REQUIREMENTS (manufacturer to supply missing data)		
Proposal Curve No.: 12C-B-1	Max. Head (kPa): 135	Factory Testing:
Speed (rpm): 1750	Max. Power (kW): 1.67	☒Required ☐Not Required
Efficiency (%):39	Max. Solid Size (mm): 32	
Rated Power (kW): 1.28		

Remarks: Factory testing includes standard factory tests.

PUMP DATA SHEET (cont'd)
BUILDING DRAINAGE SUMP PUMPS

Equipment Tag Number(s): P-S586, P-S587

PUMP CONSTRUCTION DETAILS (manufacturer to supply missing data)

Nozzles						**Miscellaneous Connections**		
	Size (mm)	**Rating**	**Facing**	**Location (front/top)**			**Size**	**Location**
Suction	50	125	NPT	front		Drain		
Discharge	50	125	NPT	top		Vent	25	Discharge
						Pres. Gauge		
						Warm Up		

Discharge Orientation: Top	Impeller Diameter (mm):	Bearings (Type/No.):
	Rated 158 Max 158 Min 158	Radial: Mfr's Standard Thrust: Mfr's Standard
	Packing:	Lubrication Type:
	Manufacturer na	☒ Grease ☐ Oil
	Type Na	Coupling:
	Size/No. Rings Na	Manufacturer Mfr's standard
Hydro Test Pressure (kPa): _____	Mechanical Seal:	Type _____ Model _____
Field Testing: ☐ Not required	Type: As specified	Driver Half-Coupling Mounted by:
☐Required, functional and performance	Manufacturer: Mfr's standard	☒ Pump Mfr. ☐ Driver Mfr.
	Model: Mfr's standard	☐ Purchaser
	Lubrication: Grease	

Remarks: _____

MATERIALS (manufacturer to supply missing data)

Case: Gray Iron 30	Impeller: Ductile Iron 65-45-12	Shaft: Steel 1025
Case Wear Rings: Carbon Steel 1026	Impeller Wear Rings: Carbon Steel 1026	Shaft Sleeve: Alloy Steel 4130
Remarks:		Baseplate:
		Material Gray Iron 30

ADDITIONAL REQUIREMENTS

Self Priming Air Release Valve model GRP33-07

Pump and motor shall be shipped pre-assembled on structural steel base

Direct coupled drive arrangement complete with direct drive base plate and coupling guard

MOTOR DATA SHEET BUILDING DRAINAGE	
Project: City of Winnipeg SEWPCC Upgrading/Expansion Project	
Process/Facility: Secondary Clarifier	
Equipment Name: Building Drainage Sump Pumps	
Equipment Tag Number(s): P-S586, P-S587	
Type: Squirrel-cage induction meeting requirements of NEMA MG 1	
Manufacturer: For multiple units of the same type of equipment, furnish motors and accessories of a single manufacturer	
Hazardous Location: ☐ Furnish motors for hazardous (classified) locations that conform to UL 674 and have an applied UL listing mark	
Motor Kilowatts: 1.5	Guaranteed Minimum Efficiency at Full Load: 97 percent
Voltage: 575	Guaranteed Minimum Power Factor at Full Load: ____ percent
Phase: 3	Service Factor (@ rated max. amb. temp.): ☐ 1.0 ☒ 1.15
Frequency: 60	Enclosure Type: TEFC
Synchronous Speed: 1750 rpm	Mounting Type: ☒ Horizontal ☐ Vertical
☐ Multispeed, Two-Speed:	☐ Vertical Shaft: ☐ Solid ☐ Hollow
____ / ____ rpm	☐ Vertical Thrust Capacity (kg): Up ____ Down ____
☐ Constant kW	☐ Adjustable Speed Drive: See Section 26 29 23, Variable
☐ Variable Torque	Frequency Drives.
☐ Constant Torque	Operating Speed Range: ____ to ____% of Rated Speed
Winding: ☒ One ☐ Two	☐ Thermal Protection: _____
	☐ Space Heater: ____ volts, single phase
	☒ Oversize main terminal (conduit) box for motors
	☒ Terminal for connection of equipment grounding wire in each terminal box
Additional Motor Requirements: ☒ See Section 26 20 00, Low-Voltage AC Induction Motors	
Special Features:	
_____	
_____	

PUMP DATA SHEET
BUILDING DRAINAGE SUMP PUMPS

Project: City of Winnipeg SEWPCC Upgrading/Expansion Project

Process/Facility: Secondary Clarifier

Service: Building Drainage

Pump Name: Building Drainage Sump Pumps

Equip. Tag Number(s): P-S588, P-S589

Manufacturer and Model: (1) Gorman Rupp 12C2-B
(2) _____
(3) _____

No. Pumps Required: 2		
Drive Type: ☒ Constant ☐ Adjustable		
☒ Direct-Coupled ☐ Belt		
LIQUID	**OPERATING CONDITIONS**	**SERVICE CONDITIONS**
Name: Building Drainage	Capacity (L/S):	Temp (°C): Max 40 Min 5
Pumping Temperature (°C):	Normal 4.42 Rated 4.42	Rel. Hum (%): Max 100 Min 0
Normal 10-20 Max 25 Min 5	Discharge Pressure (kPa): _____	Altitude (m): 227
Specific Gravity @ 1.0 (°C): 20	Suction Pressure (kPa):	☒ Indoor ☒ Heated
Viscosity (CP) @ 1.0 (°C): 20	Max _____ Rated _____	☐ Outdoor ☐ Unheated
pH: 6.5-7.5	Diff. Pressure (kPa): 96	Area Classification: Unclassified
Corrosion/Erosion/Abrasion Caused by:	Diff. Head (m): 9.75	Other: _____
_____	NPSH Available (m): 7.18	
Remarks: _____	Remarks: _____	Remarks: _____
_____	_____	_____
_____	_____	_____
PERFORMANCE REQUIREMENTS (manufacturer to supply missing data)		
Proposal Curve No.: 12C-B-1	Max. Head (kPa): 135	Factory Testing:
Speed (rpm): 1750	Max. Power (kW): 1.67	☒Required ☐Not Required
Efficiency (%):39	Max. Solid Size (mm): 32	
Rated Power (kW): 1.5		

Remarks: Factory testing includes standard factory tests.

_____

_____

PUMP DATA SHEET (cont'd)
BUILDING DRAINAGE SUMP PUMPS

Equipment Tag Number(s): P-S588, P-S589

PUMP CONSTRUCTION DETAILS (manufacturer to supply missing data)

Nozzles						**Miscellaneous Connections**		
	Size (mm)	**Rating**	**Facing**	**Location (front/top)**			**Size**	**Location**
Suction	50	125	NPT	front		Drain		
Discharge	50	125	NPT	top		Vent	25	Discharge
						Pres. Gauge		
						Warm Up		

Discharge Orientation: Top	Impeller Diameter (mm):	Bearings (Type/No.):
	Rated 158 Max 158 Min 158	Radial: Mfr's Standard Thrust: Mfr's Standard
	Packing:	Lubrication Type:
	Manufacturer na	☒ Grease ☐ Oil
	Type Na	Coupling:
	Size/No. Rings Na	Manufacturer Mfr's standard
Hydro Test Pressure (kPa): _____	Mechanical Seal:	Type _____ Model _____
Field Testing: ☐ Not required	Type: As specified	Driver Half-Coupling Mounted by:
☐Required, functional and performance	Manufacturer: Mfr's standard	☒ Pump Mfr. ☐ Driver Mfr.
	Model: Mfr's standard	☐ Purchaser
	Lubrication: Grease	

Remarks: _____

MATERIALS (manufacturer to supply missing data)

Case: Gray Iron 30	Impeller: Ductile Iron 65-45-12	Shaft: Steel 1025
Case Wear Rings: Carbon Steel 1026	Impeller Wear Rings: Carbon Steel 1026	Shaft Sleeve: Alloy Steel 4130
Remarks: _____		Baseplate:
		Material Gray Iron 30

ADDITIONAL REQUIREMENTS

Self Priming Air Release Valve model GRP33-07

Pump and motor shall be shipped pre-assembled on structural steel base

Direct coupled drive arrangement complete with direct drive base plate and coupling guard

MOTOR DATA SHEET
BUILDING DRAINAGE

Project: City of Winnipeg SEWPCC Upgrading/Expansion Project

Process/Facility: Secondary Clarifier

Equipment Name: Building Drainage Sump Pumps

Equipment Tag Number(s): P-S588, P-S589

Type: Squirrel-cage induction meeting requirements of NEMA MG 1

Manufacturer: For multiple units of the same type of equipment, furnish motors and accessories of a single manufacturer

Hazardous Location: ☐ Furnish motors for hazardous (classified) locations that conform to UL 674 and have an applied UL listing mark

Motor Kilowatts: 1.5	Guaranteed Minimum Efficiency at Full Load: 97 percent
Voltage: 575	Guaranteed Minimum Power Factor at Full Load: ____ percent
Phase: 3	Service Factor (@ rated max. amb. temp.): ☐ 1.0 ☒ 1.15
Frequency: 60	Enclosure Type: TEFC
Synchronous Speed: 1750 rpm	Mounting Type: ☒ Horizontal ☐ Vertical
☐ Multispeed, Two-Speed:	☐ Vertical Shaft: ☐ Solid ☐ Hollow
____ / ____ rpm	☐ Vertical Thrust Capacity (kg): Up ____ Down ____
☐ Constant kW	☐ Adjustable Speed Drive: See Section 26 29 23, Variable
☐ Variable Torque	Frequency Drives.
☐ Constant Torque	Operating Speed Range: ____ to ____% of Rated Speed
Winding: ☒ One ☐ Two	☐ Thermal Protection: _____
	☐ Space Heater: ____ volts, single phase
	☒ Oversize main terminal (conduit) box for motors
	☒ Terminal for connection of equipment grounding wire in each terminal box

Additional Motor Requirements: ☒ See Section 26 20 00, Low-Voltage AC Induction Motors

Special Features:

_____

_____

PUMP DATA SHEET
BUILDING DRAINAGE SUMP PUMPS

Project: City of Winnipeg SEWPCC Upgrading/Expansion Project

Process/Facility: Secondary Clarifier

Service: Building Drainage

Pump Name: Building Drainage Sump Pumps

Equip. Tag Number(s): P-S595

Manufacturer and Model: (1) Gorman Rupp 81 1/2D3-B
(2) _____
(3) _____

No. Pumps Required: 1		
Drive Type: ☒ Constant ☐ Adjustable		
☒ Direct-Coupled ☐ Belt		
LIQUID	**OPERATING CONDITIONS**	**SERVICE CONDITIONS**
Name: Building Drainage	Capacity (L/S):	Temp (°C): Max 40 Min 5
Pumping Temperature (°C):	Normal 1.9 Rated 1.9	Rel. Hum (%): Max 100 Min 0
Normal 10-20 Max 25 Min 5	Discharge Pressure (kPa): _____	Altitude (m): 227
Specific Gravity @ 1.0 (°C): 20	Suction Pressure (kPa):	☒ Indoor ☒ Heated
Viscosity (CP) @ 1.0 (°C): 20	Max _____ Rated _____	☐ Outdoor ☐ Unheated
pH: 6.5-7.5	Diff. Pressure (kPa): 90	Area Classification: Unclassified
Corrosion/Erosion/Abrasion Caused by:	Diff. Head (m): 9.14	Other: _____
_____	NPSH Available (m): 7.18	
Remarks: _____	Remarks: _____	Remarks: _____
_____	_____	_____
_____	_____	_____
PERFORMANCE REQUIREMENTS (manufacturer to supply missing data)		
Proposal Curve No.: 81 1/2D-B	Max. Head (kPa): 132	Factory Testing:
Speed (rpm): 3450	Max. Power (kW): 0.51	☒Required ☐Not Required
Efficiency (%):42	Max. Solid Size (mm): 7.1	
Rated Power (kW): 0.56		

Remarks: Factory testing includes standard factory tests.

_____

_____

PUMP DATA SHEET (cont'd)
BUILDING DRAINAGE SUMP PUMPS

Equipment Tag Number(s): P-S595

PUMP CONSTRUCTION DETAILS (manufacturer to supply missing data)

Nozzles						**Miscellaneous Connections**		
	Size (mm)	**Rating**	**Facing**	**Location (front/top)**			**Size**	**Location**
Suction	38	125	NPT	front		Drain		
Discharge	38	125	NPT	top		Vent	25	Discharge
						Pres. Gauge		
						Warm Up		

Discharge Orientation: Top	Impeller Diameter (mm):	Bearings (Type/No.):
	Rated 92 Max _____ Min _____	Radial: Mfr's Standard Thrust: Mfr's Standard
	Packing:	Lubrication Type:
	Manufacturer na	☒ Grease ☐ Oil
	Type Na	Coupling:
	Size/No. Rings Na	Manufacturer Mfr's standard
Hydro Test Pressure (kPa): _____	Mechanical Seal:	Type _____ Model _____
Field Testing: ☐ Not required	Type: As specified	Driver Half-Coupling Mounted by:
☐Required, functional and performance	Manufacturer: Mfr's standard	☒ Pump Mfr. ☐ Driver Mfr.
	Model: Mfr's standard	☐ Purchaser
	Lubrication: Grease	

Remarks: _____

MATERIALS (manufacturer to supply missing data)

Case: Gray Iron 30	Impeller: Ductile Iron 65-45-12	Shaft: Steel 1025
Case Wear Rings: Carbon Steel 1026	Impeller Wear Rings: Carbon Steel 1026	Shaft Sleeve: Alloy Steel 4130
Remarks: _____		Baseplate:
		Material Gray Iron 30

ADDITIONAL REQUIREMENTS

Self Priming Air Release Valve model GRP33-07

Pump and motor shall be shipped pre-assembled on structural steel base

Direct coupled drive arrangement complete with direct drive base plate and coupling guard

MOTOR DATA SHEET
BUILDING DRAINAGE

Project: City of Winnipeg SEWPCC Upgrading/Expansion Project

Process/Facility: Secondary Clarifier

Equipment Name: Building Drainage Sump Pumps

Equipment Tag Number(s): P-S595

Type: Squirrel-cage induction meeting requirements of NEMA MG 1

Manufacturer: For multiple units of the same type of equipment, furnish motors and accessories of a single manufacturer

Hazardous Location: ☐ Furnish motors for hazardous (classified) locations that conform to UL 674 and have an applied UL listing mark

Motor Kilowatts: 0.56	Guaranteed Minimum Efficiency at Full Load: 97 percent
Voltage: 575	Guaranteed Minimum Power Factor at Full Load: ____ percent
Phase: 3	Service Factor (@ rated max. amb. temp.): ☐ 1.0 ☒ 1.15
Frequency: 60	Enclosure Type: TEFC
Synchronous Speed: 3450 rpm	Mounting Type: ☒ Horizontal ☐ Vertical
☐ Multispeed, Two-Speed:	☐ Vertical Shaft: ☐ Solid ☐ Hollow
____ / ____ rpm	☐ Vertical Thrust Capacity (kg): Up ____ Down ____
☐ Constant kW	☐ Adjustable Speed Drive: See Section 26 29 23, Variable
☐ Variable Torque	Frequency Drives.
☐ Constant Torque	Operating Speed Range: ____ to ____% of Rated Speed
Winding: ☒ One ☐ Two	☐ Thermal Protection: _____
	☐ Space Heater: ____ volts, single phase
	☒ Oversize main terminal (conduit) box for motors
	☒ Terminal for connection of equipment grounding wire in each terminal box

Additional Motor Requirements: ☒ See Section 26 20 00, Low-Voltage AC Induction Motors

Special Features:

_____

_____

SECTION 43 21 13.29

INDUCED FLOW (RECESSED IMPELLER) CENTRIFUGAL PUMPS

EQUIPMENT AND COMPONENT NUMBERS

ID No.	Equipment Description
P-G323	Grit Slurry Pump
P-G324	Grit Slurry Pump
P-G325	Grit Slurry Pump
P-G335	Grit Slurry Pump
P-G336	Grit Slurry Pump
P-P105	Primary Sludge Pump
P-P106	Primary Sludge Pump
P-P111	Primary Sludge Pump
P-P116	Primary Sludge Pump

PART 1 GENERAL

1.1 REFERENCES

A. The following is a list of standards which may be referenced in this section:
   1. American Bearing Manufacturers Association (ABMA).
   2. American Iron and Steel Institute (AISI).
   3. American Society of Mechanical Engineers (ASME):
      a. B16.1, Grey Iron Pipe Flanges and Flanged Fittings Classes 25, 125, and 250.
      b. B16.5, Pipe Flanges and Flanged Fittings NPS 1/2 Through NPS 24 Metric/Inch Standard.
      c. B16.47, Large Diameter Steel Flanges NPS 26 Through NPS 60 Metric/Inch Standard.
   4. ASTM International (ASTM):
      a. A48/A48M, Standard Specification for Gray Iron Castings.
      b. A108, Standard Specification for Steel Bar, Carbon and Alloy, Cold-Finished.
      c. A276/A276M, Standard Specification for Stainless Steel Bars and Shapes.
      d. A436, Standard Specification for Austenitic Gray Iron Castings.
      e. A532/A532M, Standard Specification for Abrasion-Resistant Cast Irons.
      f. A582/A582M, Standard Specification for Free-Machining Stainless Steel Bars.
      g. A743/A743M, Standard Specification for Castings, Iron-Chromium, Iron-Chromium-Nickel, Corrosion Resistant, for General Application.
      h. B62, Standard Specification for Composition Bronze or Ounce Metal Castings.
      i. B148, Standard Specification for Aluminum-Bronze Sand Castings.
   5. Hydraulic Institute (ANSI/HI):
      a. 1.1-1.2, Rotodynamic Centrifugal Pumps for Nomenclature and Definitions.
      b. 9.6.4, Rotodynamic Pumps for Vibration Measurements and Allowable Values.

c. 14.6, Rotodynamic Pumps for Hydraulic Performance Acceptance Tests.

6. Institute of Electrical and Electronics Engineers (IEEE): 112, Standard Test Procedure for Polyphase Induction Motors and Generators.
7. International Organization for Standardization (ISO): 10816-3, Mechanical vibration - Evaluation of machine vibration by measurements on non-rotating parts - Part 3; Industrial machines with nominal power above 15kW and nominal speeds between 120 r/min and 15000 r/min when measured in situ.
8. National Electrical Manufacturer's Association (NEMA): MG 1, Motors and Generators.
9. 2010 National Building Code of Canada, with 2011 Manitoba Amendments (NBC).

1.2 DEFINITIONS

A. Terminology pertaining to pumping unit performance and construction shall conform to the ratings and nomenclature of the Hydraulic Institute Standards.

1.3 SUBMITTALS

A. Shop Drawings:
1. Make, model, weight, and horsepower of each equipment assembly.
2. Complete catalog information, descriptive literature, specifications, and identification of materials of construction.
3. Performance data curves showing head, capacity, horsepower demand, and pump efficiency over the entire operating range of the pump, from shutoff to maximum capacity. Indicate separately the head, capacity, horsepower demand, overall efficiency, and minimum submergence required at the guarantee point.
4. Detailed drawings showing the equipment dimensions, size, and locations of connections and weights of associated equipment.
5. Power and control wiring diagrams, including terminals and numbers.
6. Complete motor nameplate data, as defined by NEMA, motor manufacturer, and including any motor modifications.
7. Factory finish system.
8. Submit written certification from Professional Engineer licensed in the Province of Manitoba stating that support systems, anchorage, and equipment have been designed according to requirements of the NBC for post-disaster structures at time of Shop Drawing submittals.

B. Quality Control Submittals:
1. Factory Functional and Performance Test Reports.
2. Manufacturer's Certification of Compliance that the factory finish system is identical to the requirements specified herein.
3. Special shipping, storage and protection, and handling instructions.
4. Manufacturer's printed installation instructions.
5. Manufacturer's Certificate of Proper Installation.
6. Suggested spare parts list to maintain the equipment in service for a period of 5 years. Include a list of special tools required for checking, testing, parts replacement, and maintenance with current price information.

7. List special tools, materials, and supplies furnished with equipment for use prior to and during startup and for future maintenance.
8. Operation and maintenance manual.

1.4 EXTRA MATERIALS

A. Furnish, tag, and box for shipment and storage the following extra materials for each set of pumps of the same make and model:

Item	Quantity
Bearings	One complete set
Gaskets and O-ring seals	One complete set
Keys, dowels, pins, etc.	One complete set
Shaft sleeve	One
Mechanical seal	One
Impeller	One
Impeller shaft	One
Lubricants	One year supply
Any special tools required for routine maintenance	One complete set

B. Delivery: In accordance with Section 01 61 00, Common Product Requirements.

PART 2 PRODUCTS

2.1 GENERAL

A. Pumps shall be of a standard and industry proven design, designed and sized for the full range of operating duties and conditions specified, and the selected units shall meet the specified requirements of minimum service life.

B. Coordinate pump requirements with drive manufacturer and be responsible for pump and drive requirements.

C. Design equipment, anchorage, and support systems for vertical and lateral loading in accordance with NBC.

2.2 MANUFACTURERS

A. Refer to Pump Data Sheets and Motor Data Sheets at end of section.

B. No “or-equal” or substitute products will be considered.

2.3 CONDITIONS OF SERVICE

A. Refer to Pump Data Sheets and Motor Data Sheets at end of section.

2.4 PERFORMANCE REQUIREMENTS

A. Refer to Pump Data Sheets and Motor Data Sheets at end of section.

B. Specified operating range of each pump shall be entirely within manufacturer's recommended allowable operating region of pump performance curve.

C. Pump and motor shall be suitable for continuous operation at any flow-head point within specified operating range.

D. Rated capacity shall be between 70 percent and 120 percent of flow at best efficiency point (BEP) at rated speed.

E. Pump performance curve shall having continuously rising head characteristic from run-out to shutoff.

F. Maximum required shaft power at any point on pump performance curve at maximum speed shall not exceed 95 percent of motor rated (nameplate) power, excluding motor service factor.

2.5 PUMP DESIGN

A. Pumps shall be of fully recessed slurry type design with impeller mounted completely out of flow path between pump inlet and discharge connections such that solids are not required to flow through impeller.

B. Pumps shall be specifically designed to pump wastewater sludge and slurries of grit, debris, and organic solids.

C. Pump casing shall be two-piece radially split type with separate and removable suction piece designed such that impeller can be withdrawn without need to remove discharge casing or disturb discharge piping.

D. Hydraulic design of impeller shall be such that fluid flow is directed to suction piece, which shall be designed as sacrificial part and be easily replaceable. Impeller shall be of cup type design such that vane ends are surrounded by integral shroud. Impellers of radial design that incorporate impeller in recessed portion of volute or wearplate are not acceptable.

E. Removable wearplate of Ni-Hard shall be provided in back of impeller designed to direct flow from behind impeller to centre of volute for maximum protection of casing.

F. Pumps shall be equipped with slotted raised-face flanges in accordance with ASME B16.1 Class 125.

G. Pump shaft shall be accurately machined and be of sufficient strength to transmit full driver output.

H. Bearings shall be oil bath lubricated. Provide built-in sight glass to check proper oil level. Bearings shall be rated for minimum B10 life of 100,000 hours without credit for any rear pump-out vanes to balance hydraulic thrust.

I. Mechanical Seal:
   1. Double mechanical seal suitable for external water flush.
   2. Inboard seal faces shall be tungsten carbide on silicon carbide. Outboard seal faces shall be carbon on ceramic.
   3. All metal components and gland plate shall be Type 316 stainless steel. Seals shall be Buna-N.
   4. Seal shall be manufactured by John Crane, Chesterton, or Flowserve.

J. V-belt Drives:
   1. Provide belts and sheaves to drive pump at speed required to meet rated capacity and head.
   2. Drive shall be adjustable sheave type, TB Wood's Model SVS or approved equal in accordance with B8, to allow speed change by means of adjustment to motor sheave when drive is not in operation.
   3. Provide stainless steel belt guard to safely enclose belts.

K. Mounting:
   1. Horizontal Mounting: Common pump and motor base shall be minimum 10 mm thick fabricated steel, suitably constructed to support full weight of pump and motor.
   2. Pumps with V-belt drive shall be provided with adjustable motor base so that motor can be easily moved for belt tensioning and adjustment.

2.6 ELECTRIC MOTORS

A. Squirrel cage induction motor suitable for continuous duty.

B. In accordance with Section 26 20 00, Low Voltage AC Induction Motors.

C. For pumps with variable frequency drives, inverter duty rated suitable for operation with variable frequency drive specified in Section 26 29 23, Variable Frequency Drives.

D. Refer to Motor Data Sheets at end of section for additional requirements.

2.7 VARIABLE FREQUENCY DRIVES

A. Provide variable frequency drives (VFDs) in accordance with the requirements of Section 26 29 23, Variable Frequency Drives. Equipment supplier is responsible for coordination of pumps, motors, and VFDs supplied.

2.8 ACCESSORIES

A. Lifting Lugs: Equipment weighing over 45 kg.

B. Anchor Bolts: Type 316 stainless steel sized by equipment manufacturer, and as specified in Section 05 50 00, Metal Fabrications (Basic).

C. Equipment Identification Plates: In accordance with Section 40 05 53, Identification Labels for Equipment, Fabricated Tanks, Valves and Piping Systems.

2.9 FACTORY FINISHING

A. Prepare, prime, and finish coat in accordance with Section 09 90 00, Painting and Coatings.

2.10 SOURCE QUALITY CONTROL

A. Factory Tests and Adjustments:
   1. Test all pumps and motors actually furnished.
   2. Testing to be in accordance with latest edition of HI Standards.
   3. Pump Tests:
      a. Hydrostatic Test:
         1) Test pressure containing components of pump including, as a minimum, pump casing, suction nozzle, and back cover.
         2) Test pressure to be 150 percent of maximum shutoff head. Maintain test pressure for not less than 10 minutes.
      b. Vibration Test:
         1) Perform on pumps with motor size of 30 kW or larger.
         2) Test pump at rated speed in accordance with HI 9.6.4.
         3) Statically and dynamically balance rotating assembly prior to final assembly.
         4) Vibration shall not exceed limits specified in HI 9.6.4.
      c. Performance Test:
         1) Test fully assembled pump in accordance with HI 14.6, Acceptance Grade 1U.
         2) Performance testing to be at rated speed.
      d. Submit complete test records certified correct by authorized representative of pump manufacturer for each test performed.
      e. Make necessary adjustments, realignments, and retest to bring pumps into compliance.
   4. Motor Tests: In accordance with Section 26 20 00, Low-Voltage AC Induction Motors.

PART 3 EXECUTION

3.1 INSTALLATION

A. Install in strict accordance with manufacturer's printed instructions.

B. Level base by means of steel wedges (steel plates and steel shims). Wedge taper not to exceed 1 in 50. Use double wedges to provide level bearing surface for pump and driver base.

Accomplish wedging such that there is no change of level or springing of baseplate when anchor bolts are tightened.

C. Adjust pump assemblies such that driving units are properly aligned, plumb, and level with driven units and all interconnecting shafts and couplings. Do not compensate for misalignment by use of flexible couplings.

D. After pump and driver have been set in position, aligned, and shimmed to proper elevation, grout space between bottom of baseplate and concrete foundation with poured, non-shrinking grout of proper category, as specified in Section 03 60 00, Grouting. Remove wedges after grout is set and pack void with grout.

E. Connect suction and discharge piping without imposing strain to pump flanges.

F. Anchor Bolts: Accurately place using equipment templates and as specified in Section 05 50 00, Metal Fabrications (Basic).

3.2 FIELD FINISHING

A. Equipment as specified in Section 09 90 00, Painting and Coating.

3.3 FIELD QUALITY CONTROL

A. Functional Tests:
   1. Conduct on each pump, system, and subsystem as specified in Section 01 91 14, Equipment Testing and Facility Startup.
   2. Alignment: Test complete assemblies for correct rotation, proper alignment and connection, and quiet operation.
   3. Operating Temperatures and Vibration: Monitor bearing areas on pump and motor for abnormally high temperatures or vibrations.
   4. Vibration Test:
      a. Perform on pumps with motor size of 30 kW or larger.
      b. Test fully assembled pump at rated speed and specified rated capacity in accordance with HI 9.6.4.
      c. Test with unit installed and in normal operation and discharging to connected piping system, and with actual building structures and foundations provided.
      d. Vibration shall not exceed limits specified in HI 9.6.4.
      e. If units exhibit vibration in excess of the limits specified, adjust or modify as necessary to bring units into compliance. Units that cannot be adjusted or modified to conform as specified shall be replaced at no cost to the City.
      f. Provide instrumentation in current calibration to measure pump vibration at locations outlined in HI Standards.
   5. Test Records and Report: Prepare and submit complete test report along with test records.

B. Performance Test:
   1. Conduct on each pump as specified in Section 01 91 14, Equipment Testing and Facility Startup.
   2. Perform under normal operating conditions at rated speed.

3. Test for continuous 3-hour period without malfunction.
4. Measure and record pump flow rate, pump suction and discharge pressures (corrected for gauge elevation and velocity head), motor amperage, and voltage. Calculated differential head at rated capacity shall meet or exceed rated head specified. Calculated shaft power at rated capacity shall not exceed power shown on accepted factory test results.
5. Use of plant instrumentation is allowed for tests. Provide additional instrumentation as required to obtain required test data.
6. Test Records and Report: Prepare and submit complete test report along with test records.

3.4 MANUFACTURER'S SERVICES

A. Manufacturer's Representative: Present at Site or classroom designated by the City, for minimum person-days listed below, travel time excluded:
   1. Two person-days for installation assistance and inspection.
   2. Two person-days for functional and performance testing and completion of Manufacturer's Certificate of Proper Installation.
   3. Two person-days for prestartup classroom or Site training.
   4. Two person-days for facility startup.
   5. Two person-days for post-startup training of the City's personnel. Training shall not commence until an accepted detailed lesson plan for each training activity has been reviewed by Contract Administrator.

B. See Section 01 43 33, Contractor Field Services and Section 01 91 14, Equipment Testing & Facility Startup.

3.5 SUPPLEMENTS

A. The supplements listed below, following "End of Section", are part of this Specification.
   1. Pump Data Sheets.
   2. Motor Data Sheets.

END OF SECTION

PUMP DATA SHEET NO. 1
GRIT SLURRY PUMPS P-G323, P-G324, P-G325

Project: City of Winnipeg SEWPCC Upgrading/Expansion Project

Process/Facility: Grit Tanks 1 & 2

Service: Grit Slurry

Pump Name: Grit Slurry Pumps

Equipment Tag Number(s): P-G323, P-G324, P-G325

Manufacturer and Model: (1) Wemco 4" Model C

(2) Grundfos/Morris 6100 CT 4x4-18

(3) _____

Number of Pumps Required: Three	Pump Type: Recessed impeller

Drive Type: ☒ Constant Speed ☐ Two Speed ☐ Variable Speed

LIQUID PROPERTIES	OPERATING CONDITIONS	SERVICE CONDITIONS
Name: Grit slurry	Capacity (L/min):	Ambient Temperature (°C):
Fluid Temperature (°C):	Rated: 1135 2nd: ±830 3rd: ±1830	Min: 5 Max: 40
Min: 5 Normal: 10-20 Max: 25	Total Dynamic Head (m):	Relative Humidity (%):
Specific Gravity: 1.0-1.05 @ 20 °C	Rated: 20.3 2nd: ±21.0 3rd: ±19.5	Min: 0 Max: 100
Vapour Pressure (kPa): 2.5 @ 20 °C	Static Head (m):	Altitude (m): 227
Viscosity (cp): 1.0-10 @ 20 °C	Rated: 5.5 2nd: 11.1 3rd: 5.5	☒ Indoor ☒ Heated
pH: 6.5-7.5	Static Suction Head/(Lift) (m):	☐ Outdoor ☐ Unheated
Total Suspended Solids (% by wt.): 0.5-4	Rated: 6.1 2nd: 0.5 3rd: 6.1	Area Electrical Classification:
Corrosion/Erosion/Abrasion Caused By:	NPSH Available (m):	Unclassified
Suspended grit and sand	Rated: 15.8 2nd: 10.2 3rd: 15.5	
Remarks:	Remarks:	Remarks:

PERFORMANCE REQUIREMENTS		
Max. Pump Speed (rpm): 1150	Min. Shut-off Head (m): 21	Factory Testing:
Min. Pump Speed (rpm): _____	Min. Solids Passage (mm): 100	☒ Functional ☒ Performance
Speed at Rated Capacity (rpm): TBD by mfr.	Min. NPSH Margin Ratio: 1.5	Field Testing:
Min. Hyd. Eff. at Rated Capacity (%): 25	Min. Continuous Flow (m^3/hr): _____	☒ Functional ☒ Performance
Max. Power at Rated Capacity (kW): 15		Hydrostatic Test Pressure (kPag):
		150% of pump shut-off head

Remarks:

PUMP DATA SHEET NO. 1 (cont'd)
GRIT SLURRY PUMPS P-G323, P-G324, P-G325

PUMP CONSTRUCTION DETAILS

Nozzles						Miscellaneous Connections		
	NPS (mm)	ANSI Class	Facing	Location			Size (mm)	Location
Suction	100	125	FF	End		Drain		
Discharge	100	125	FF	Top		Vent		

Impeller:
Type: Recessed
Diameter (in): TBD by mfr

Casing Mount:
☒ Horizontal ☐ Vertical
☐ Centerline ☐ Near Centerline
☒ Foot ☐ Bracket

Motor Coupling:
☐ Direct ☐ Line shaft
☒ V-belt (side) ☐ V-belt (overhead)

Vent and Drain Connections:
☐ Tapped and plugged

Suction and Discharge Gauge Connections:
☐ Tapped and plugged

Packing:
Type: n/a
Manufacturer: n/a
Size/No. of Rings: n/a

Mechanical Seal:
Type: As specified
Manufacturer: Mfr's standard
Model: Mfr's standard
Lubrication: Seal water

Bearings:
Radial (type/No.): Mfr's standard
Thrust (type/no.): Mfr's standard
Min. ABMA B-10 Life: 100,000 hrs
Lubrication: ☐ Grease ☒ Oil

Shaft Coupling:
Type: n/a
Manufacturer: n/a
Model: n/a

Remarks: _____

MATERIALS OF CONSTRUCTION

Pump Casing: ASTM A532 Class I, Type A	Bearing Housing: ASTM A48 Class 25	Shaft: ASTM A108 Grade 1045
Wear Plate: ASTM A532 Class I, Type A		Shaft Sleeve: ASTM A582 Type 416
Suction Piece: ASTM A532 Class I, Type A		
Impeller: ASTM A532 Class I, Type A		

Remarks: Pump casing, wear plate, suction piece, and impeller shall be Ni-Hard, min. 600 BHN.

ADDITIONAL REQUIREMENTS

_____

MOTOR DATA SHEET NO. 1
GRIT SLURRY PUMPS P-G323, P-G324, P-G325

Project: City of Winnipeg SEWPCC Upgrading/Expansion Project

Process/Facility: Grit Removal

Service: Grit Slurry

Pump Name: Grit Slurry Pumps

Equipment Tag Number(s): P-G323, P-G324, P-G325

Type: Squirrel-cage induction meeting requirements of NEMA MG 1.

Manufacturer: For multiple units of same type of equipment, furnish motors and accessories from single manufacturer.

Hazardous Location: ☐ Furnish motors for hazardous (classified) locations that conform to UL 674 and have an applied UL listing mark.

Motor Size (kW): 18.6 ☐ Min. ☐ Max.	Guaranteed Minimum Efficiency at Full Load (%): 93.0
Voltage: 575	Guaranteed Minimum Power Factor at Full Load (%): Mfr's standard
Phase: 3	Service Factor (at rated max. ambient temperature): ☐ 1.0 ☒ 1.15
Frequency (Hz): 60	Enclosure Type: TEFC
Synchronous Speed (rpm): 1200	Mounting Type: ☒ Horizontal ☐ Vertical
☒ Constant Speed	Vertical Shaft: ☐ Solid ☐ Hollow
☐ Two-speed Speed (rpm): Slow _____ Fast _____	Vertical Thrust Capacity (N): Up _____ Down _____ ☐ Adjustable Speed Application (inverter duty rated) In accordance with Section 26 29 23, Variable Frequency Drives. Operating Speed Range: _____ to _____ % of rated speed
☐ Multi-speed Speed (rpm): Min. _____ Max. _____	
Variable Speed Load Classification: ☐ Variable Torque ☐ Constant Torque ☐ Constant Power	☐ Thermal Protection: _____ ☐ Space Heater: _____ volts, single phase ☒ Oversize main terminal (conduit) box for motors ☒ Terminal for connection of equipment grounding wire in each terminal box
Winding: ☒ One ☐ Two	

ADDITIONAL REQUIREMENTS

☒ In accordance with Section 26 20 00, Low-Voltage AC Induction Motors.

PUMP DATA SHEET NO. 2
GRIT SLURRY PUMPS P-G335, P-G336

Project: City of Winnipeg SEWPCC Upgrading/Expansion Project

Process/Facility: Grit Tanks 1 & 2

Service: Grit Slurry

Pump Name: Grit Slurry Pumps

Equipment Tag Number(s): P-G335, P-G336

Manufacturer and Model: (1) Wemco 4" Model C

(2) Grundfos/Morris 6100 CT 4x4-18

(3) _____

Number of Pumps Required: Two	Pump Type: Recessed impeller

Drive Type: ☒ Constant Speed ☐ Two Speed ☐ Variable Speed

LIQUID PROPERTIES	OPERATING CONDITIONS	SERVICE CONDITIONS
Name: Grit slurry	Capacity (L/min):	Ambient Temperature (°C):
Fluid Temperature (°C):	Rated: 1135 2nd: ±880 3rd: ±1830	Min: 5 Max: 40
Min: 5 Normal: 10-20 Max: 25	Total Dynamic Head (m):	Relative Humidity (%):
Specific Gravity: 1.0-1.05 @ 20 °C	Rated: 15.9 2nd: ±16.5 3rd: ±15.0	Min: 0 Max: 100
Vapour Pressure (kPa): 2.5 @ 20 °C	Static Head (m):	Altitude (m): 227
Viscosity (cp): 1.0-10 @ 20 °C	Rated: 5.4 2nd: 9.6 3rd: 5.4	☒ Indoor ☒ Heated
pH: 6.5-7.5	Static Suction Head/(Lift) (m):	☐ Outdoor ☐ Unheated
Total Suspended Solids (% by wt.): 0.5-4	Rated: 4.6 2nd: 0.5 3rd: 4.6	Area Electrical Classification:
Corrosion/Erosion/Abrasion Caused By:	NPSH Available (m):	Unclassified
Suspended grit and sand	Rated: 14.4 2nd: 10.3 3rd: 14.0	
Remarks:	Remarks:	Remarks:

PERFORMANCE REQUIREMENTS		
Max. Pump Speed (rpm): 1150	Min. Shut-off Head (m): 17	Factory Testing:
Min. Pump Speed (rpm): _____	Min. Solids Passage (mm): 100	☒ Functional ☒ Performance
Speed at Rated Capacity (rpm): TBD by mfr	Min. NPSH Margin Ratio: 1.5	Field Testing:
Min. Hyd. Eff. at Rated Capacity (%): 25	Min. Continuous Flow (m^3/hr): _____	☒ Functional ☒ Performance
Max. Power at Rated Capacity (kW): 11		Hydrostatic Test Pressure (kPag):
		150% of pump shut-off head

Remarks:

PUMP DATA SHEET NO. 2 (cont'd)
GRIT SLURRY PUMPS P-G335, P-G336

PUMP CONSTRUCTION DETAILS

Nozzles						Miscellaneous Connections		
	NPS (mm)	ANSI Class	Facing	Location			Size (mm)	Location
Suction	100	125	FF	End		Drain		
Discharge	100	125	FF	Top		Vent		

Impeller:
Type: Recessed
Diameter (in): TBD by mfr

Casing Mount:
☒ Horizontal ☐ Vertical
☐ Centerline ☐ Near Centerline
☒ Foot ☐ Bracket

Motor Coupling:
☐ Direct ☐ Line shaft
☒ V-belt (side) ☐ V-belt (overhead)

Vent and Drain Connections:
☐ Tapped and plugged

Suction and Discharge Gauge Connections:
☐ Tapped and plugged

Packing:
Type: n/a
Manufacturer: n/a
Size/No. of Rings: n/a

Mechanical Seal:
Type: As specified
Manufacturer: Mfr's standard
Model: Mfr's standard
Lubrication: Seal water

Bearings:
Radial (type/No.): Mfr's standard
Thrust (type/no.): Mfr's standard
Min. ABMA B-10 Life: 100,000 hrs
Lubrication: ☐ Grease ☒ Oil

Shaft Coupling:
Type: n/a
Manufacturer: n/a
Model: n/a

Remarks: _____

MATERIALS OF CONSTRUCTION

Pump Casing: ASTM A532 Class I, Type A	Bearing Housing: ASTM A48 Class 25	Shaft: ASTM A108 Grade 1045
Wear Plate: ASTM A532 Class I, Type A		Shaft Sleeve: ASTM A582 Type 416
Suction Piece: ASTM A532 Class I, Type A		
Impeller: ASTM A532 Class I, Type A		

Remarks: Pump casing, wear plate, suction piece, and impeller shall be Ni-Hard, min. 600 BHN.

ADDITIONAL REQUIREMENTS

_____

MOTOR DATA SHEET NO. 2
GRIT SLURRY PUMPS P-G335, P-G336

Project: City of Winnipeg SEWPCC Upgrading/Expansion Project

Process/Facility: Grit Removal

Service: Grit Slurry

Pump Name: Grit Slurry Pumps

Equipment Tag Number(s): P-G335, P-G336

Type: Squirrel-cage induction meeting requirements of NEMA MG 1.

Manufacturer: For multiple units of same type of equipment, furnish motors and accessories from single manufacturer.

Hazardous Location: ☐ Furnish motors for hazardous (classified) locations that conform to UL 674 and have an applied UL listing mark.

Motor Size (kW): 18.6 ☐ Min. ☐ Max.	Guaranteed Minimum Efficiency at Full Load (%): 93.0
Voltage: 575	Guaranteed Minimum Power Factor at Full Load (%): Mfr's standard
Phase: 3	Service Factor (at rated max. ambient temperature): ☐ 1.0 ☒ 1.15
Frequency (Hz): 60	Enclosure Type: TEFC
Synchronous Speed (rpm): 1200	Mounting Type: ☒ Horizontal ☐ Vertical
☒ Constant Speed	Vertical Shaft: ☐ Solid ☐ Hollow
☐ Two-speed Speed (rpm): Slow _____ Fast _____	Vertical Thrust Capacity (N): Up _____ Down _____
☐ Multi-speed Speed (rpm): Min. _____ Max. _____	☐ Adjustable Speed Application (inverter duty rated) In accordance with Section 26 29 23, Variable Frequency Drives. Operating Speed Range: 50 to 100 % of rated speed
Variable Speed Load Classification: ☐ Variable Torque ☐ Constant Torque ☐ Constant Power	☐ Thermal Protection: _____ ☐ Space Heater: _____ volts, single phase ☒ Oversize main terminal (conduit) box for motors ☒ Terminal for connection of equipment grounding wire in each terminal box
Winding: ☒ One ☐ Two	

ADDITIONAL REQUIREMENTS

☒ In accordance with Section 26 20 00, Low-Voltage AC Induction Motors.

PUMP DATA SHEET NO. 3
PRIMARY SLUDGE PUMPS P-P105, P-P106, P-P111, P-P116

Project: City of Winnipeg SEWPCC Upgrading/Expansion Project

Process/Facility: Primary Clarifiers

Service: Primary Sludge

Pump Name: Primary Sludge Pumps

Equipment Tag Number(s): P-P105, P-P106, P-P111, P-P116

Manufacturer and Model: (1) Wemco 4x11 Model CE

(2) Hayward Gordon Torus XR4-11

(3) _____

Number of Pumps Required: Four	Pump Type: Recessed impeller

Drive Type: ☐ Constant Speed ☐ Two Speed ☒ Variable Speed

LIQUID PROPERTIES	OPERATING CONDITIONS	SERVICE CONDITIONS
Name: Primary sludge	Capacity (m3/hr):	Ambient Temperature (°C):
Fluid Temperature (°C):	Rated: 42 2nd: ±150 3rd: ±20	Min: 5 Max: 40
Min: 5 Normal: 10-20 Max: 25	Total Dynamic Head (m):	Relative Humidity (%):
Specific Gravity: 1.0-1.05 @ 20 °C	Rated: 11.8 2nd: ±10.0 3rd: ±3.0	Min: 0 Max: 100
Vapour Pressure (kPa): 2.5 @ 20 °C	NPSH Available (m):	Altitude (m): 228
Viscosity (cp): 1.0-100 @ 20 °C	Rated: 15.6 2nd: 15.2 3rd: 15.6	☒ Indoor ☒ Heated
pH: 6.5-7.5		☐ Outdoor ☐ Unheated
Total Suspended Solids (% by wt.): 0.5-4		Area Electrical Classification:
Corrosion/Erosion/Abrasion Caused By:		Unclassified
Suspended grit and sand		
Remarks:	Remarks:	Remarks:

PERFORMANCE REQUIREMENTS		
Max. Pump Speed (rpm): 1150	Min. Shut-off Head (m): 12	Factory Testing:
Min. Pump Speed (rpm): 575	Min. Solids Passage (mm): 100	☒ Functional ☒ Performance
Speed at Rated Capacity (rpm): 1150	Min. NPSH Margin Ratio: 1.5	Field Testing:
Min. Hyd. Eff. at Rated Capacity (%): 30	Min. Continuous Flow (m^3/hr): 20	☒ Functional ☒ Performance
Max. Power at Rated Capacity (kW): 5.0		Hydrostatic Test Pressure (kPag):
		150% of pump shut-off head

Remarks: _____

PUMP DATA SHEET NO. 3 (cont'd)
PRIMARY SLUDGE PUMPS P-P105, P-P106, P-P111, P-P116

PUMP CONSTRUCTION DETAILS

Nozzles						Miscellaneous Connections		
	NPS (mm)	ANSI Class	Facing	Location			Size (mm)	Location
Suction	100	125	FF	End		Drain		
Discharge	100	125	FF	Top		Vent		

Impeller:
Type: Recessed
Diameter (in): TBD by mfr

Casing Mount:
☒ Horizontal ☐ Vertical
☐ Centerline ☐ Near Centerline
☒ Foot ☐ Bracket

Motor Coupling:
☒ Direct ☐ Line shaft
☐ V-belt (side) ☐ V-belt (overhead)

Vent and Drain Connections:
☐ Tapped and plugged

Suction and Discharge Gauge Connections:
☐ Tapped and plugged

Packing:
Type: n/a
Manufacturer: n/a
Size/No. of Rings: n/a

Mechanical Seal:
Type: As specified
Manufacturer: Mfr's standard
Model: Mfr's standard
Lubrication: Seal water

Bearings:
Radial (type/No.): Mfr's standard
Thrust (type/no.): Mfr's standard
Min. ABMA B-10 Life: 100,000 hrs
Lubrication: ☐ Grease ☒ Oil

Shaft Coupling:
Type: n/a
Manufacturer: n/a
Model: n/a

Remarks: _____

MATERIALS OF CONSTRUCTION

Pump Casing: ASTM A532 Class I, Type A	Bearing Housing: ASTM A48 Class 25	Shaft: ASTM A108 Grade 1045
Wear Plate: ASTM A532 Class I, Type A		Shaft Sleeve: ASTM A582 Type 416
Suction Piece: ASTM A532 Class I, Type A		
Impeller: ASTM A532 Class I, Type A		

Remarks: Pump casing, wear plate, suction piece, and impeller shall be Ni-Hard, min. 600 BHN.

ADDITIONAL REQUIREMENTS

MOTOR DATA SHEET NO. 3
PRIMARY SLUDGE PUMPS P-P105, P-P106, P-P111, P-P116

Project: City of Winnipeg SEWPCC Upgrading/Expansion Project

Process/Facility: Primary Clarifiers

Service: Primary Sludge

Pump Name: Primary Sludge Pumps

Equipment Tag Number(s): P-P105, P-P106, P-P111, P-P116

Type: Squirrel-cage induction meeting requirements of NEMA MG 1.

Manufacturer: For multiple units of same type of equipment, furnish motors and accessories from single manufacturer.

Hazardous Location: ☐ Furnish motors for hazardous (classified) locations that conform to UL 674 and have an applied UL listing mark.

Motor Size (kW): 11.2 ☒ Min. ☐ Max.	Guaranteed Minimum Efficiency at Full Load (%): 93.0
Voltage: 575	Guaranteed Minimum Power Factor at Full Load (%): Mfr's. std.
Phase: 3	Service Factor (at rated max. ambient temperature): ☐ 1.0 ☒ 1.15
Frequency (Hz): 60	Enclosure Type: TEFC
Synchronous Speed (rpm): 1200	Mounting Type: ☒ Horizontal ☐ Vertical
☐ Constant Speed	Vertical Shaft: ☐ Solid ☐ Hollow
☐ Two-speed Speed (rpm): Slow _____ Fast _____	Vertical Thrust Capacity (N): Up _____ Down _____
☒ Multi-speed Speed (rpm): Min. 600 Max. 1200	☒ Adjustable Speed Application (inverter duty rated) In accordance with Section 26 29 23, Variable Frequency Drives. Operating Speed Range: 50 to 100 % of rated speed
Variable Speed Load Classification: ☒ Variable Torque ☐ Constant Torque ☐ Constant Power	☐ Thermal Protection: _____ ☐ Space Heater: _____ volts, single phase ☒ Oversize main terminal (conduit) box for motors ☒ Terminal for connection of equipment grounding wire in each terminal box
Winding: ☒ One ☐ Two	

ADDITIONAL REQUIREMENTS

☒ In accordance with Section 26 20 00, Low-Voltage AC Induction Motors.

SECTION 43 21 38

SUBMERSIBLE AXIAL-FLOW PUMPS

EQUIPMENT AND COMPONENT NUMBERS

ID No.	Equipment Description
P-R156	Bioreactor 1 Internal Recycle Pump
P-R166	Bioreactor 2 Internal Recycle Pump
P-R176	Bioreactor 3 Internal Recycle Pump
	Spare pump

PART 1 GENERAL

1.1 WORK OF THIS SECTION

A. General: This section covers the work necessary to provide submersible horizontal axial-flow pumps complete with discharge adaptor, components and all accessories and appurtenances.

1.2 REFERENCES

A. The following is a list of standards that may be referenced in this section:
1. American Bearing Manufacturers Association (ABMA):
   a. 9, Load Ratings and Fatigue Life for Ball Bearings.
   b. 11, Load Rating and Fatigue Life for Roller Bearings.
2. American Society of Mechanical Engineers (ASME): B16.1, Cast Iron Pipe Flanges & Flanged Fittings, Class 125.
3. ASTM International (ASTM):
   a. A48, Standard Specification for Gray Iron Castings.
   b. A576, Standard Specification for Steel Bars, Carbon, Hot-Wrought, Special Quality.
4. Hydraulic Institute Standards (HIS).
5. National Electrical Manufacturers Association (NEMA).
6. National Fire Protection Association (NFPA):
   a. 70, National Electrical Code.
   b. 497, Recommended Practice for the Classification of Flammable Liquids, Gases or Vapors and of Hazardous (Classified) Locations for Electrical Installations in Chemical Process Areas.
7. Underwriters Laboratories Inc. (UL)
8. Canadian Electrical Code (CEC).
9. National Electrical Manufacturer's Association (NEMA): MG 1, Motors and Generators.
10. National Fire Protection Association (NFPA): 820, Standard for Fire Protection in Wastewater Treatment and Collection Facilities.
11. 2010 National Building Code of Canada (NBC) with 2011 Manitoba Amendments.
12. Occupational Health and Safety Act (OHSA).

1.3 DEFINITIONS

A. Terminology pertaining to pumping unit performance and construction shall conform to ratings and nomenclature of Hydraulic Institute Standards.

1.4 SUBMITTALS

A. Action Submittals:
1. Make, model, weight, and horsepower of each equipment assembly.
2. Complete catalog information, descriptive literature, specifications, and identification of materials of construction.
3. Performance data curves showing head, capacity, horsepower demand, and pump efficiency over the entire operating range of the pump, from shutoff to maximum capacity. Indicate separately the head, capacity, horsepower demand, overall efficiency, and minimum submergence required at the guarantee point.
4. Discharge adaptor details including overall general arrangement drawing and typical guide, support attachments, cable entry, coating, and lining materials.
5. Power and control wiring diagrams, including terminals and numbers, for moisture and temperature detection system components.
6. Motor data in accordance with requirements of Section 26 20 00, Low-Voltage AC Induction Motors.
7. Factory finish system.
8. Submit written certification from Professional Engineer licensed in Province of Manitoba stating that support systems, anchorage, and equipment have been designed for post-disaster structures according to requirements of NBC with Manitoba Amendments, at time of Shop Drawing submittals.

B. Quality Control Submittals:
1. Special shipping, storage and protection, and handling instructions.
2. Manufacturer’s printed installation instructions.
3. List special tools, materials, and supplies furnished with equipment for use prior to and during startup and for future maintenance.
4. Operation and Maintenance Data as specified in Section 01 78 23, Operation and Maintenance Data.
5. Manufacturer’s Certificate of Proper Installation, in accordance with Section 01 43 33, Contractor Field Services.
6. Field functional test reports.

PART 2 PRODUCTS

2.1 GENERAL

A. Submersible, horizontal, axial- or mixed-flow type pump, for pumping aeration basin mixed liquor which has been screened with 6-mm perforated plate screen.

B. Pump shall be designed for constant speed and continuous operation under submerged conditions at a depth of approximately 6.3 m. The pump motor should be however inverter duty type suitable for variable speed operation.

C. Stainless steel pump discharge adaptor shall be designed to be bolted to a concrete wall.

2.2 MANUFACTURERS

A. Materials, equipment, and accessories specified in this section shall be products of: Xylem, ABS, or KSB.

B. No “or equal” will be considered.

2.3 SERVICE CONDITIONS

A. Liquid Pumped: Mixed Liquor from an aeration basin in a municipal wastewater treatment plant with 6,000 to 8,000 mg/L total suspended solids (biological solids).

B. Liquid Temperature: 10 to 25 degrees C.

2.4 PUMP

A. General:
1. Submersible, horizontal, direct-drive, axial or mixed flow type pump, for pumping aeration basin mixed liquor which has been screened with perforated plate screen.
2. Designed for variable speed and continuous operation under submerged conditions.
3. Pump assembly designed to be lowered into operating position, and raised from operating position, by a pump retrieval system for inspection and service without the need for personnel to enter the pump basin.
4. Pump assembly shall automatically and firmly connect to the discharge adapter when lowered into place. Provide a positive pump seat, with O-ring seal, which connects the pump case by downward motion, without rotation, guided by one or two non-load-bearing guides in stainless steel 316. Final connection shall ensure zero leakage around the pump.

B. Pump Lifting:
1. Pumps will be removed/installed using a portable davit supplied by other under this project.
2. For each pump, provide manufacturer’s standard cable pump lifting arrangement of stainless steel construction.
3. Lifting cable shall include provisions for attaching power and control cables to the lifting cable to help ensure the power and control cables do not become damaged in the flow stream.

C. Propeller shall be self-cleaning backward curved design preventing material build-up on the blades. Each propeller shall be statically and dynamically balanced.

D. Shaft: Provide common pump/motor shaft of sufficient size to transmit full driver output with maximum deflection of 0.05 mm (0.002 inch) measured at the lower mechanical seal.

E. Shaft Seal: Provide two independent mechanical shaft seals arranged in tandem and installed in oil-filled chamber.

F. Bearings: Provide sealed/shielded (permanently lubricated) bearings to provide a L10 life of 100,000 hours, minimum.

G. All exposed hardware shall be 316 stainless steel. All surfaces coming into contact with the pumped liquid other than stainless steel shall be protected a two-part epoxy paint.

2.5 DISCHARGE ADAPTER

A. Provide a discharge adapter for each pump in stainless steel 316 that can be bolted to the concrete wall to which the 800 mm discharge pipe is connected. See Drawings for additional information.

2.6 ELECTRICAL

A. General: Provide all necessary electrical components and wiring for a complete, functional system. Electrical components shall be provided in accordance with the requirements of Division 26, Electrical.

B. For each pump, provide one temperature/seal fail motor supervision relay. Provide relays loose for installation by the electrical contractor.

C. Power and Signal Cable:
   1. Provide power and control conductors with each pump with sufficient length to suit the application, suitable for submersible application, sized in accordance with NEC requirements.

2.7 ACCESSORIES

A. Lifting Arrangement: Provide lifting lugs and stainless steel wire cable to bracket/pump assembly for retrieval.

B. Equipment Identification Plates: In accordance with Section 40 05 53, Identification Labels for Equipment, Fabricated Tanks, Valves and Piping Systems.

PART 3 EXECUTION

3.1 INSTALLATION

A. Provide Type 316 stainless steel mounting bolts, washers, and nuts and install the equipment at locations indicated on the Drawings.

B. Install the equipment in accordance with the manufacturer’s instructions and typical installation detail included in this section.

3.2 FIELD FINISHING

A. All surfaces shall receive coatings in the shop, except for touchup. Painting shall be in accordance with and as specified in Section 09 90 00, Painting and Coating.

3.3 FIELD QUALITY CONTROL

A. Functional Tests:
   1. Conduct on each pump.
   2. Test complete assemblies for correct rotation, proper alignment, and excessive vibration.

B. Performance Test:
   1. Conduct on each pump.
   2. Perform under actual or approved simulated operating conditions.
   3. Modify or replace equipment or materials failing required tests.
   4. Perform additional testing required due to changes of materials required by Supplier or due to failure of materials or construction to meet specifications.

3.4 MANUFACTURER'S SERVICES

A. Manufacturer's Representative: Present at Site or classroom designated by the Contract Administrator for minimum person-days listed below, travel time excluded:
   1. 3 person-days for installation assistance and inspection.
   2. 1 person-day for function and performance testing and completion of Manufacturer's Certificate of Proper Installation.
   3. 1 person-day for pre-startup classroom and Site training.

B. See Section 01 43 33, Contractor Field Services.

3.5 SUPPLEMENTS

A. The supplements listed below, following "End of Section," are part of this Specification.
   1. Data Sheets: Pump and motor.

END OF SECTION

PUMP DATA SHEET
SUBMERSIBLE AXIAL PUMPS

Project: City of Winnipeg SEWPCC Upgrading/Expansion Project

City: City of Winnipeg

Service: Recycle Pumps

Pump Name: Bioreactor Internal Recycle Pump

Equip. Tag Number(s): P-R156, P-R-166, P-R176 plus one extra pump supplied loose as spare

Manufacturer and Model:
(1) Xylem PP 4670
(2) Sulzer RCP 800-A170
(3) KSB Amaline C 8032-328

No. Pumps Required: 4		
Drive Type: ☒Constant ☐Adjustable		
LIQUID	**OPERATING CONDITIONS**	**SERVICE CONDITIONS**
Name: Mixed Liquor	Capacity (l/s):	Temp (°C): Max 25 Min 10
Pumping Temperature (°C):	Normal 775 Rated 775	
Max 25 Min 10	Min. Continuous Flow (l/s): 700	Altitude (m): 230
Specific Gravity @ 1Kg/L @ 15 °C:	Discharge Pressure (m): 0.8	
Vapor Pressure (kPa):	Submergence (m): 6.3 m	
Viscosity (CP) @ 15 °C: 1.3 centipoise		Area Classification:
		Other:
Total Suspended Solids (mg/l) 6000-8000		
pH: 6 to 8.5		
Corrosion/Erosion/Abrasion Caused by:		
Possible Scale Buildup (Y/N):	Remarks:	Remarks:
Remarks:		

PERFORMANCE REQUIREMENTS (manufacturer to supply missing data)

Pump Speed Control: Constant		Factory Testing:
Pump Speed Range (rpm): 291/440		☒Required ☐Not Required
Efficiency (%): 40% minimum		
Rated Power (kw) 20 kW maximum		
Remarks: blades to be fiber repellent that resist unbalance with material hanging on the blades		

Equipment Tag Number(s): P-R156, P-R-166, P-R176 plus one extra pump supplied loose as spare

PUMP CONSTRUCTION DETAILS (manufacturer to supply missing data)

Nozzles								
	Size	**Rating**	**Facing**	**Location**				
Suction	_____	_____	_____	_____				
Discharge	800 mm	_____	_____	_____				

Casing Mount: ☐Foot		Bearings (Type/No.):
☐Centerline ☐Bracket		Radial _____ Thrust _____
☐Near Centerline		ABMA Rating Life (hours): 100,000
Hydro Test Pressure (kPa): _____		Lubrication Type:
Elastomers: _____	Mechanical Seal:	☐Grease ☒Oil
Fasteners: Stainless Steel	Manufacturer _____	Coupling:
	Model _____	Manufacturer _____
	Manufacturer Code _____	Type _____ Model _____
		Driver Half-Coupling Mounted by:
Field Testing: ☐Not required		☐Pump Mfr. ☐Driver Mfr.
☒Required, functional and performance		☐Purchaser

Remarks: _____

MATERIALS (manufacturer to supply missing data)

Motor Housing: 316 Stainless Steel	Propeller: 316 Stainless Steel	Upper Guide Bracket: 316 Stainless Steel
Support Frame: 316 Stainless Steel	Shaft: Steel	Lower Guide Bracket: 316 Stainless Steel

Remarks: _____

ADDITIONAL REQUIREMENTS

The portable davit that will be used to lift the pump has a maximum rated capacity of 500 kg. Contractor to upgrade the davit rating at no additional cost to the client if the proposed pump exceeds the specified davit rating.

INDUCTION MOTOR DATA SHEET	
Project: City of Winnipeg SEWPCC Upgrading/Expansion Project	
City: City of Winnipeg	
Equipment Name: Bioreactor Internal Recycle Pump	
Equipment Tag Number(s): P-R156, P-R-166, P-R176	
Type: Squirrel-cage induction meeting requirements of NEMA MG 1	
Manufacturer: For multiple units of the same type of equipment, furnish motors and accessories of a single manufacturer	
Hazardous Location: ☐ Furnish motors for hazardous (classified) locations that conform to UL 674 and have an applied UL listing mark	
Motor kw: 20 maximum	Guaranteed Minimum Efficiency at Full Load: 90 percent
Voltage: 600	Guaranteed Minimum Power Factor at Full Load: 89 percent
Phase: 3	Service Factor (@ rated max. amb. temp.): ☐ 1.0 ☒ 1.15
Frequency: 60	Enclosure Type:
Synchronous Speed: _____ rpm	Mounting Type: ☒ Horizontal ☐ Vertical
☐ Multispeed, Two-Speed:	☐ Vertical Shaft: ☐ Solid ☐ Hollow
_____ / _____ rpm	☐ Vertical Thrust Capacity (lb): Up _____ Down _____
☐ Constant Power	☒ Adjustable Speed Drive: In accordance with Section 26 29 23, Low Voltage Adjustable Frequency Drive Systems.
☐ Variable Torque	Operating Speed Range: _____ to _____% of Rated Speed
☐ Constant Torque	
Winding: ☐ One ☐ Two	☒ Thermal Protection: _____
	☐ Space Heater: _____ volts, single phase
	☐ Oversize main terminal (conduit) box for motors
	☐ Terminal for connection of equipment grounding wire in each terminal box
Additional Motor Requirements: ☒ In accordance with Section 26 20 00, Low-Voltage AC Induction Motors	
Special Features:	
Note that the motor needs to be rated for adjustable speed service even though it will operated in constant speed.	
Supply relay for temperature and leak detection	

SECTION 43 21 39.13

SUBMERSIBLE PUMPS

EQUIPMENT AND COMPONENT NUMBERS

Tag No.	Equipment Name
P-S593	Flood Control Pump 1
P-S594	Flood Control Pump 2
P-T261	Process Sump Pump 1
P-T262	Process Sump Pump 2

PART 1 GENERAL

1.1 REFERENCES

A. The following is a list of standards that may be referenced in this section:
   1. American Society for Testing and Materials (ASTM):
      a. A48, Standard Specification for Gray Iron Castings.
      b. A576, Standard Specification for Steel Bars, Carbon, Hot-Wrought, Special Quality.
   2. Hydraulic Institute Standards (HIS).
   3. National Electric Code (NEC).
   4. National Electrical Manufacturers Association (NEMA).
   5. National Fire Protection Association (NFPA): 70, National Electric Code.
   6. Underwriters Laboratories (UL)
   7. National Building Code of Canada, with Manitoba Amendments (NBC).

1.2 DEFINITIONS

A. Terminology pertaining to pumping unit performance and construction shall conform to ratings and nomenclature of Hydraulic Institute Standards.

1.3 SUBMITTALS

A. Shop Drawings:
   1. Make, model, weight, and horsepower of each equipment assembly.
   2. Complete catalog information, descriptive literature, specifications, and identification of materials of construction.
   3. Performance data curves showing head, capacity, horsepower demand, and pump efficiency over entire operating range of pump, from shutoff to maximum capacity. Indicate separately head, capacity, horsepower demand, overall efficiency, and minimum submergence required at guarantee point.
   4. Power and control wiring diagrams, including terminals and numbers.
   5. Complete motor nameplate data, as defined by NEMA, from motor manufacturer.
   6. Factory finish system.
   7. Bearing life calculations.

B. Quality Control Submittals:
   1. Factory and Field Performance Test Reports
   2. Manufacturer's Certification of Compliance that factory finish system meets requirements specified herein.
   3. Special shipping, storage and protection, and handling instructions.
   4. Manufacturer's printed installation instructions.
   5. Manufacturer's Certificate of Proper Installation.
   6. Suggested spare parts list to maintain equipment in service for period of 5 years. Include list of special tools required for checking, testing, parts replacement, and maintenance with current price information.
   7. List special tools, materials, and supplies furnished with equipment for use prior to and during startup and for future maintenance.
   8. Operation and maintenance manual
   9. Submit written certification from Professional Engineer licensed in the Province of Manitoba stating that support systems, anchorage, and equipment have been designed according to requirements of the NBC for post-disaster structures at time of Shop Drawing submittals.

1.4 EXTRA MATERIALS

A. Furnish for each pump size:
   1. One set mechanical seals.
   2. One complete set of special tools required to dismantle pump.

PART 2 PRODUCTS

2.1 GENERAL

A. Pump and Electrical Driver: Meet requirements for class, group, and division location in accordance with NFPA 70.

2.2 SUPPLEMENTS

A. Specific requirements are attached to this section as supplements.

B. No “or-equal” or substitute products will be considered.

2.3 COMPONENTS

A. Pump equipment shall consist of pump(s) complete with motor(s), control system, guide rail and anchoring brackets, base elbow, power cable(s), and pump lifting cable(s).
   1. Pump metal parts that come into contact with guide rail or cable system shall be made of nonsparking materials.
   2. Control panel and level switches.

B. Lifting Arrangement: 600 mm minimum, stainless steel chain, and one “grip-eye.” Attach chain permanently to pump and access platform with stainless steel wire rope. “Grip-eye” will

be capable of being threaded over and engaging links of stainless steel chain so pump and motor may be lifted with “grip-eye” and independent hoist.

C. Sliding guide bracket shall be integral part of pump unit. Pump unit shall be guided by no less than 2 guide bars, or equivalent cable system, and pressed tightly against discharge connection elbow with metal-to-metal contact or through use of profile-type gasket, provided that gasket is attached to pump’s flange and can be easily accessed for inspection when pump is lifted out of wetwell.

D. Motor nameplate horsepower shall not be exceeded at any head-capacity point on pump curve.

E. Pump motor and sensor cables shall be suitable for submersible pump application and cable sizing shall conform to NEC specifications for pump motors. Cable shall be of sufficient length to reach junction boxes without strain or splicing.

F. Cable Entry System:
   1. Junction chamber and motor shall be separated by stator lead sealing gland or terminal board that shall prevent foreign material entering through pump top.
   2. Utilize cable with factory-installed sealing gland with nonshrink epoxy seal system.
   3. O-ring compression seal between sealing gland and cable entry point shall also be acceptable.

2.4 ACCESSORIES

A. Provide leak and thermal detection relay. Supply loose for installation by the Contractor.

B. Equipment Identification Plates: In accordance with Section 40 05 53, Identification Labels for Equipment, Fabricated Tanks, Valves and Piping Systems.

C. Lifting Lugs: Equipment weighing over 45 kg.

D. Anchor Bolts: Type 316 stainless steel, sized by equipment manufacturer, and as specified in Section 05 50 00, Metal Fabrications (Basic).

2.5 FACTORY FINISHING

A. Prepare, prime, and finish coat in accordance with Section 09 90 00, Painting and Coating.

2.6 SOURCE QUALITY CONTROL

A. Pump:
   1. Factory Performance Test:
      a. In accordance with HIS 1.6, Level B for centrifugal pump tests.
      b. Include test data sheets.
   2. Conduct on each pump.
   3. Perform under actual or approved simulated operating conditions.
      a. Throttle discharge valve to obtain pump data points on curve at 2/3, 1/3, and shutoff conditions.

B. Motor Functional Test: Perform manufacturer's standard motor test.

PART 3 EXECUTION

3.1 INSTALLATION

A. Install in accordance with manufacturer's printed instructions.

B. Connect suction and discharge piping without imposing strain to pump flanges.

C. No portion of pump shall bear directly on floor of sump.

3.2 FIELD FINISHING

A. Equipment as specified in Section 09 90 00, Painting and Coating.

3.3 FIELD QUALITY CONTROL

A. Functional Test: Conduct on each pump.
   1. Alignment: Test complete assemblies for correct rotation, proper alignment and connection, and quiet operation.
   2. Test pump using flushing service water temporary piped to the sump.
   3. Test Report Requirements: In accordance with Hydraulic Institute Standards for centrifugal pump tests HIS 11.6 and 14.6.

3.4 MANUFACTURER'S SERVICES

A. Manufacturer's Representative: Present at Site or classroom designated by the City, for minimum person-days listed below, travel time excluded:
   1. 1 person-day for installation assistance and inspection, and completion of Manufacturer's Certificate of Proper Installation.
   2. 1 person-days for training of the City's personnel. Training shall not commence until accepted detailed lesson plan for each training activity has been reviewed by Contract Administrator.

B. See Section 01 43 33, Contractor Field Services and Section 01 91 14, Equipment Testing and Facility Startup.

3.5 SUPPLEMENTS

A. The supplements listed below, following “End of Section,” are part of this Specification.
   1. Data Sheets: Pump and motor.

END OF SECTION

PUMP DATA SHEET NO.1
SECONDARY CLARIFIERS FLOOD PUMPS

Project: City of Winnipeg SEWPCC Upgrading/Expansion Project

City: Winnipeg

Service: Secondary Clarifiers Gallery Flood Control

Pump Name: Flood Control Pumps

Equip. Tag Number(s): P-S593, P-S594

Manufacturer and Model: (1) Xylem Model NP 3202 LT3 - 614,
(2) Flowserve Model 12MSX20A,
(3) Sulzer

No. Pumps Required: Two		
Drive Type: ☒Constant ☐Adjustable		
LIQUID	**OPERATING CONDITIONS**	**SERVICE CONDITIONS**
Name: Water	Capacity (m3/hr):	Temp (°C): Max 25 Min 10
Pumping Temperature (°C):	Normal 1080 Rated 1080	Rel. Hum (%): Max 95 Min 10
Normal 10 - 20 Max 25 Min 5	Min. Continuous Flow (m3/hr): 300	Altitude (m): 230
Specific Gravity: 1.0-1.01 @ 20°C	Discharge Pressure (m): 12	☒Indoor ☐Heated
Vapor Pressure (kPa): 2.5 @ 20°C		☐Outdoor ☐Unheated
Viscosity (CP) @ 20 °C: 1		Area Classification: Not classified
@ 15 °C: 1.2		Other:
Total Suspended Solids (mg/l) 3000-6000		
pH: 6 to 8.5		
Corrosion/Erosion/Abrasion Caused by:		
Possible Scale Buildup (Y/N):	Remarks:	Remarks:
Remarks:		

PERFORMANCE REQUIREMENTS (manufacturer to supply missing data)

Pump Speed Control: Constant:	Max. Head (m):	Factory Testing:
Pump Speed Range (rpm): /	Max. Power (kw):	☒Required ☐Not Required
Efficiency (%):	Largest diameter solid pump can pass (mm)	

Rated Power (kw) 44.7

Remarks: Pump speed to be 1200 rpm maximum

Equipment Tag Number(s): P-S593, P-S594

PUMP CONSTRUCTION DETAILS (manufacturer to supply missing data)

Nozzles								
	Size	**Rating**	**Facing**	**Location**				
Suction	_____	_____	_____	_____				
Discharge	300 mm	_____	_____	_____				

Casing Mount: ☐Foot	Packing:	Bearings (Type/No.):
☐Centerline ☐Bracket	Manufacturer _____	Radial _____ Thrust _____
☐Near Centerline	Type _____	ABMA Rating Life (hours): _____
Hydro Test Pressure (kPa): _____	Size/No. Rings _____	Lubrication Type:
Elastomers: Nitrile Rubber	Mechanical Seal:	☐Grease ☐Oil
Fasteners: Stainless Steel	API Class Code _____	Coupling:
Impeller: _____	Manufacturer _____	Manufacturer _____
	Model _____	Type _____ Model _____
	Manufacturer Code _____	Driver Half-Coupling Mounted by:
Field Testing: ☐Not required	Double (Y/N): Y_____	☐Pump Mfr. ☐Driver Mfr.
☒Required, functional and performance		☐Purchaser

Remarks: _____

MATERIALS (manufacturer to supply missing data)

Pump Casing: Cast Iron ASTM A48	Impeller: Cast Iron ASTM A48	Elbow: Cast Iron ASTM A48
Volute: Cast Iron ASTM A48	Wear Lings: (Case)_____	Motor Housing: Cast Iron ASTM A48
	(Impeller) _____	

Shaft: Carbon Steel, ASTM A576 with stainless steel sleave or all stainless steel

Remarks: _____

ADDITIONAL REQUIREMENTS

INDUCTION MOTOR DATA SHEET	
Project: City of Winnipeg SEWPCC Upgrading/Expansion Project	
City: Winnipeg	
Equipment Name: Flood Control Pumps	
Equipment Tag Number(s): P-S593, P-S594	
Type: Squirrel-cage induction meeting requirements of NEMA MG 1	
Manufacturer: For multiple units of the same type of equipment, furnish motors and accessories of a single manufacturer	
Hazardous Location: ☐ Furnish motors for hazardous (classified) locations that conform to UL 674 and have an applied UL listing mark	
Motor kw: 44.7	Guaranteed Minimum Efficiency at Full Load: 93.5 percent
Voltage: 600	Guaranteed Minimum Power Factor at Full Load: 90 percent
Phase: 3	Service Factor (@ rated max. amb. temp.): ☐ 1.0 ☒ 1.15
Frequency: 60 Hz	Enclosure Type: Submersible
Synchronous Speed: 1200 rpm	Mounting Type: ☐ Horizontal ☒ Vertical
☐ Multispeed, Two-Speed:	☒ Vertical Shaft: ☒ Solid ☐ Hollow
_____ / _____ rpm	☐ Vertical Thrust Capacity (lb): Up _____ Down _____
☐ Constant Power	☐ Adjustable Speed Drive: In accordance with Section 26 29 23, Low Voltage Adjustable Frequency Drive Systems.
☐ Variable Torque	
☐ Constant Torque	Operating Speed Range: _____ to _____% of Rated Speed
Winding: ☐ One ☐ Two	☐ Thermal Protection: _____
	☐ Space Heater: _____ volts, single phase
	☐ Oversize main terminal (conduit) box for motors
	☐ Terminal for connection of equipment grounding wire in each terminal box
Additional Motor Requirements: ☒ In accordance with Section 26 20 00, Low-Voltage AC Induction Motors	
Special Features:	
Provide leak and thermal detection including associated relay. Supply loose for installation by the Contractor.	

PUMP DATA SHEET NO.2
BIOFILTER SUMP PUMPS

Project: City of Winnipeg SEWPCC Upgrading/Expansion Project

City: Winnipeg

Service: Biofilter Process Drain

Pump Name: Process Sump Pumps

Equip. Tag Number(s): P-T261, P-T262

Manufacturer and Model:
(1) Xylem Model DP 8050 HT
(2) Flowserve
(3) Sulzer

No. Pumps Required: Two		
Drive Type: ☒Constant ☐Adjustable		
LIQUID	**OPERATING CONDITIONS**	**SERVICE CONDITIONS**
Name: Biofilter Drainage Water	Capacity (L/s):	Temp (°C): Max 25 Min 10
Pumping Temperature (°C):	Rated 5	Rel. Hum (%): Max 95 Min 10
Normal 10 - 20 Max 25 Min 5	Min. Continuous Flow (L/s): 2	Altitude (m): 228
Specific Gravity: 1.0-1.01 @ 20°C	Total Dynamic Head (m): 8.0	☒Indoor ☒Heated
Vapor Pressure (kPa): 2.5 @ 20°C		☐Outdoor ☐Unheated
Viscosity (CP) @ 20 °C: 1		Area Classification: Class 1 Div 2
@ 15 °C: 1.2		Other:
Total Suspended Solids (mg/l) 1000-2000		
pH: 2 to 7.5		
Corrosion/Erosion/Abrasion Caused by:		
Acidic liquid		
Possible Scale Buildup (Y/N):	Remarks:	Remarks:
Remarks:		

PERFORMANCE REQUIREMENTS (manufacturer to supply missing data)

Pump Speed Control: Constant:	Max. Head (m):	Factory Testing:
Pump Speed Range (rpm): /	Max. Power (kw):	☒Required ☐Not Required
Efficiency (%):	Largest diameter solid pump can pass (mm)	

Rated Power (kw) 3

Remarks:

Equipment Tag Number(s): P-T261, P-T262

PUMP CONSTRUCTION DETAILS (manufacturer to supply missing data)

Nozzles								
	Size	**Rating**	**Facing**	**Location**				
Suction	_____	_____	_____	_____				
Discharge	50 mm	_____	_____	_____				

Casing Mount: ☐Foot	Packing:	Bearings (Type/No.):
☐Centerline ☐Bracket	Manufacturer _____	Radial _____ Thrust _____
☐Near Centerline	Type _____	ABMA Rating Life (hours): _____
Hydro Test Pressure (kPa): _____	Size/No. Rings _____	Lubrication Type:
Elastomers: Nitrile Rubber	Mechanical Seal:	☐Grease ☐Oil
Fasteners: Stainless Steel	API Class Code _____	Coupling:
Impeller: _____	Manufacturer _____	Manufacturer _____
	Model _____	Type _____ Model _____
	Manufacturer Code _____	Driver Half-Coupling Mounted by:
Field Testing: ☐Not required	Double (Y/N): Y_____	☐Pump Mfr. ☐Driver Mfr.
☒Required, functional and performance		☐Purchaser

Remarks: _____

MATERIALS (manufacturer to supply missing data)

Pump Casing: Stainless Steel 316	Impeller: Stainless Steel 316	Elbow: Stainless Steel 316
Volute: Stainless Steel 316		Motor Housing: Stainless Steel 316

Shaft: Stainless steel

Remarks: Stainless steel pump suitable for handling of corrosive wastewater containing solids

ADDITIONAL REQUIREMENTS

The pump to be provided with a cable protector assembly in stainless steel 316 and a cable support grip in stainless steel 316.

INDUCTION MOTOR DATA SHEET	
Project: City of Winnipeg SEWPCC Upgrading/Expansion Project	
City: Winnipeg	
Equipment Name: Process Sump Pumps	
Equipment Tag Number(s): P-T261, P-T262	
Type: Squirrel-cage induction meeting requirements of NEMA MG 1	
Manufacturer: For multiple units of the same type of equipment, furnish motors and accessories of a single manufacturer	
Hazardous Location: ☒ Furnish motors for hazardous (classified) locations that conform to UL 674 and have an applied UL listing mark	
Motor kw: 3	Guaranteed Minimum Efficiency at Full Load: _____ percent
Voltage: 600	Guaranteed Minimum Power Factor at Full Load: 90 percent
Phase: 3	Service Factor (@ rated max. amb. temp.): ☐ 1.0 ☒ 1.15
Frequency: 60 Hz	Enclosure Type: Submersible
Synchronous Speed: 3600 rpm	Mounting Type: ☐ Horizontal ☒ Vertical
☐ Multispeed, Two-Speed:	☒ Vertical Shaft: ☒ Solid ☐ Hollow
_____ / _____ rpm	☐ Vertical Thrust Capacity (lb): Up _____ Down _____
☐ Constant Power	☐ Adjustable Speed Drive: In accordance with Section 26 29 23, Low Voltage Adjustable Frequency Drive Systems.
☐ Variable Torque	
☐ Constant Torque	Operating Speed Range: _____ to _____% of Rated Speed
Winding: ☐ One ☐ Two	☐ Thermal Protection: _____
	☐ Space Heater: _____ volts, single phase
	☐ Oversize main terminal (conduit) box for motors
	☐ Terminal for connection of equipment grounding wire in each terminal box
Additional Motor Requirements: ☒ In accordance with Section 26 20 00, Low-Voltage AC Induction Motors	
Special Features:	
Provide leak and thermal detection including associated relay. Supply loose for installation by the Contractor.	

SECTION 43 21 39.16

CHOPPER PUMPS

EQUIPMENT AND COMPONENT NUMBERS

Tag No.	Equipment Name
P-S316	Scum Pump
P-S317	Scum Pump
P-D321	Fermenter Recirculation Pump
P-D322	Fermenter Recirculation Pump
P-D323	Fermenter Recirculation Pump

PART 1 GENERAL

1.1 REFERENCES

A. The following is a list of standards that may be referenced in this section:
   1. American Bearing Manufacturers Association (ABMA).
   2. American Iron and Steel Institute (AISI).
   3. American Society for Testing and Materials (ASTM):
      a. A48/A48M, Standard Specification for Gray Iron Castings.
      b. A276/A276M, Standard Specification for Stainless Steel Bars and Shapes.
      c. A436, Standard Specification for Austenitic Gray Iron Castings.
      d. A532/A532M, Standard Specification for Abrasion-Resistant Cast Irons.
      e. A743/A743M, Standard Specification for Castings, Iron-Chromium, Iron-Chromium-Nickel, Corrosion Resistant, for General Application.
   4. American Society of Mechanical Engineers (ASME):
      a. B16.1, Grey Iron Pipe Flanges and Flanged Fittings Classes 25, 125, and 250.
      b. B16.5, Pipe Flanges and Flanged Fittings NPS 1/2 Through NPS 24 Metric/Inch Standard.
      c. B16.47, Large Diameter Steel Flanges NPS 26 Through NPS 60 Metric/Inch Standard.
   5. Hydraulic Institute (ANSI/HI):
      a. 1.1-1.2, Rotodynamic Centrifugal Pumps for Nomenclature and Definitions.
      b. 9.6.4, Rotodynamic Pumps for Vibration Measurements and Allowable Values.
      c. 14.6, Rotodynamic Pumps for Hydraulic Performance Acceptance Tests.
   6. Institute of Electrical and Electronics Engineers (IEEE): 112, Standard Test Procedure for Polyphase Induction Motors and Generators.
   7. National Electrical Manufacturer’s Association (NEMA): MG 1, Motors and Generators.
   8. 2010 National Building Code of Canada, with 2011 Manitoba Amendments (NBC).

1.2 DEFINITIONS

A. Terminology pertaining to pumping unit performance and construction shall conform to the ratings and nomenclature of the Hydraulic Institute Standards (HIS).

1.3 SUBMITTALS

A. Shop Drawings:
1. Make, model, weight, and horsepower of each equipment assembly.
2. Complete catalog information, descriptive literature, specifications, and identification of materials of construction.
3. Performance data curves showing head, capacity, horsepower demand, and pump efficiency over the entire operating range of the pump, from shutoff to maximum capacity. Indicate separately the head, capacity, horsepower demand, overall efficiency, and minimum submergence required at the guarantee point.
4. Detailed structural, mechanical, and electrical drawings showing the equipment dimensions, size and location of connections and weights of associated equipment.
5. Power and control wiring diagrams, including terminals and numbers.
6. Complete motor nameplate data, as defined by NEMA, motor manufacturer, and including any motor modifications.
7. Bearing life calculations.
8. Factory finish system.
9. Seal lubricating and cooling requirements.
10. Submit written certification from Professional Engineer licensed in the Province of Manitoba stating that support systems, anchorage, and equipment have been designed according to requirements of the NBC for post-disaster structures at time of Shop Drawing submittals.

B. Quality Control Submittals:
1. Factory Functional and Field Performance Test Reports and Log.
2. Manufacturer’s Certification of Compliance that the factory finish system is identical to the requirements specified herein.
3. Special shipping, storage and protection, and handling instructions.
4. Manufacturer’s printed installation instructions.
5. Manufacturer’s Certificate of Proper Installation.
6. Suggested spare parts list to maintain the equipment in service for a period of 5 years. Include a list of special tools required for checking, testing, parts replacement, and maintenance with current price information.
7. List special tools, materials, and supplies furnished with equipment for use prior to and during startup and for future maintenance.
8. Operation and Maintenance Manual.

1.4 EXTRA MATERIALS

A. Furnish, tag, and box for shipment and storage the following extra materials for each set of pumps of the same make and model:
1. One set of bearings.
2. One set of gaskets and O-ring seals.
3. One set of keys, dowels, pins, etc.
4. One shaft sleeve.
5. One mechanical seal.
6. One impeller.
7. One impeller shaft.
8. One complete set of any special tools required to dismantle pump.

PART 2 PRODUCTS

2.1 GENERAL

A. No “or-equal” or substitute products will be considered.

B. Pumps shall be of a standard and industry proven design, designed and sized for the full range of operating duties and conditions specified, and the selected units shall meet the specified requirements of minimum service life.

C. Coordinate pump requirements with drive manufacturer and be responsible for pump and drive requirements.

D. Design equipment, anchorage, and support systems for vertical and lateral loading in accordance with NBC.

2.2 PUMP DESIGN

A. The horizontal chopper pump shall be specifically designed to pump waste solids at heavy consistencies without plugging or dewatering of the solids. Materials shall be chopped/macerated and conditioned by the pump as an integral part of the pumping action.

B. Casing and Back Pull-Out Plate: The pump casing shall be of volute design, spiraling outward to the class 125 ANSI flanged centerline discharge. Back pull-out design shall incorporate jacking bolts for accurate adjustment of impeller-to-cutter bar clearance, and shall allow removal of pump components without requiring disconnection of casing from inlet or discharge piping.

C. Impeller: Shall be semi-open type with pump out vanes to reduce seal area pressure. Chopping/maceration of materials shall be accomplished by the action of the cupped and sharpened leading edges of the impeller blades moving across the cutter bar at the intake openings.

D. Cutter Bar Plate: Shall be recessed into the pump bowl and shall contain at least 2 shear bars extending diametrically across the intake opening, for the purpose of preventing intake opening blockage and wrapping of debris at the shaft area.

E. Cutter Nut: The impeller shall be secured to the shaft using a cutter nut, designed to cut stringy materials and prevent binding using a raised, rotating cutter tooth.

F. Upper Cutter: Shall be threaded into the back pull-out adapter plate behind the impeller, designed to cut against the pump-out vanes and the impeller hub, reducing and removing stringy materials from the mechanical seal area.

G. Bearings shall conform to standards of Anti-Friction Bearing Manufacturers Association (AFBMA). Bearings shall be designed to provide L-10 life of 50,000 hours minimum.

H. Provide tapped and plugged case vent and drain connections.

I. Suction and discharge flanges shall conform to ANSI B16.1, Class 125.

J. Provide common pump and motor base fabricated from minimum 10 mm thick steel, suitably reinforced to support full weight of pump and motor.

K. Shaft Sealing:
   1. Flushed Tandem Mechanical Seal: The seal shall be cartridge-type tandem mechanical seal with Viton O-rings and silicon carbide (or tungsten carbide) faces. This cartridge seal shall be a pre-assembled, pre-tested so that no seal settings or adjustments are required from the installer. Any springs used to push the seal faces together must be shielded from the fluid to be pumped. The cartridge shall also include a 17-4PH, heat-treated seal sleeve and a stainless steel seal housing.
      a. Manufacturer: John Crane.

2.3 ELECTRIC MOTORS

A. See Section 26 20 00, Low Voltage AC Induction Motors.

2.4 SUPPLEMENTS

A. Specific requirements are attached to this section as supplements.

2.5 ACCESSORIES

A. Equipment Identification Plates: In accordance with Section 40 05 53, Identification Labels for Equipment, Fabricated Tanks, Valves and Piping Systems.

B. Lifting Lugs: Equipment weighing over 45 kg.

C. Anchor Bolts: Type 316 stainless steel, sized by equipment manufacturer.

2.6 FACTORY FINISHING

A. Prepare, and prime, and finish coat in accordance with Section 09 90 00, Painting and Coating.

2.7 SOURCE QUALITY CONTROL

A. Factory Tests and Adjustments: Test all equipment actually furnished.

B. Factory Test Report: Include test data sheets, curve test results, and performance test logs.

C. Pump Tests:
   1. Factory Functional Tests:
      a. Conduct on each pump.
      b. Manufacturer’s standard production tests.
      c. Hydrostatic Pressure Test: Test pump casing at 150 percent of shut-off head. Maintain test pressure for not less than 5 minutes.
      d. Vibration Test: In accordance with ANSI/HI 9.6.4.

2. Factory Performance Tests:
   a. Conduct on each pump.
   b. In accordance with ANSI/HI 14.6, Acceptance Grade 2B.

D. Motor Tests:
   1. Conduct on each motor.
   2. In accordance with Section 26 20 00, Low Voltage AC Induction Motors.

PART 3 EXECUTION

3.1 INSTALLATION

A. Install in accordance with manufacturer's printed instructions.

B. Level base by means of steel wedges (steel plates and steel shims). Wedge taper not greater than 6 mm per 300 mm. Use double wedges to provide level bearing surface for pump and driver base. Accomplish wedging so that there is no change of level or springing of baseplate when anchor bolts are tightened.

C. Adjust pump assemblies such that the driving units are properly aligned, plumb, and level with the driven units and all interconnecting shafts and couplings. Do not compensate for misalignment by use of flexible couplings.

D. After pump and driver have been set in position, aligned, and shimmed to proper elevation, grout space between bottom of baseplate and concrete foundation with poured, non-shrinking grout of proper category, as specified in Section 03 60 00, Grouting. Remove wedges after grout is set and pack void with grout.

E. Connect suction and discharge piping without imposing strain to pump flanges.

F. Anchor Bolts: Accurately place using equipment templates and as specified in Section 05 50 00, Metal Fabrications (Basic).

G. Pipe baseplate drain to hub drain or scupper.

3.2 FIELD FINISHING

A. Equipment as specified in Section 09 90 00, Painting and Coating.

3.3 FIELD QUALITY CONTROL

A. Pump Tests:
   1. Field Functional Tests:
      a. Conduct on each pump.
      b. Alignment: Test complete assemblies for correct rotation, proper alignment and connection, and quiet operation.
      c. Operating Temperatures: Monitor bearing areas on pump and motor for abnormally high temperatures.

d. Vibration Test:
   1) In accordance with ANSI/HI 9.6.4.
   2) Test with units installed and in normal operation, and discharging to connected piping systems.
   3) If units exhibit vibration in excess of limits specified, adjust or modify as necessary. Units that cannot be adjusted or modified to conform as specified shall be replaced.

2. Field Performance Tests:
   a. Conduct on each pump.
   b. Flow Output: Measured by plant instrumentation and storage volumes.
   c. Test for continuous 3 hour period.
   d. Test Report Requirements: In accordance with ANSI/HI 14.6.

B. Motor Tests:
   1. Conduct on each motor.
   2. Comply with requirements of Section 26 20 00, Low Voltage AC Induction Motors.

3.4 MANUFACTURER'S SERVICES

A. Manufacturer's Representative: Present at Site or classroom designated by the City, for minimum person-days listed below, travel time excluded:
   1. 1 person-day for installation assistance and inspection, and completion of Manufacturer's Certificate of Proper Installation.
   2. 1 person-days for training of the City's personnel. Training shall not commence until accepted detailed lesson plan for each training activity has been reviewed by Contract Administrator.

B. See Section 01 43 33, Contractor Field Services and Section 01 91 14, Equipment Testing And Facility Startup.

3.5 SUPPLEMENTS

A. The supplements listed below, following "End of Section," are a part of this Specification.
   1. Pump Data Sheets.
   2. Motor Data Sheets.

END OF SECTION

PUMP DATA SHEET NO. 1
SECONDARY CLARIFIERS SCUM PUMPS

Project: City of Winnipeg SEWPCC Upgrading/Expansion Project

Process/Facility: Secondary Clarifiers

Service: Secondary Clarifiers Scum

Pump Name: Scum Pumps

Equipment Tag Number(s): P-S316, P-S317

Manufacturer and Model: (1) Vaughan Model HE3L6

(2) Hayward Gordon XCS10C

(3) _____

Number of Pumps Required: Two	Pump Type: Chopper centrifugal

Drive Type: ☒ Constant Speed ☐ Two Speed ☐ Variable Speed

LIQUID PROPERTIES	OPERATING CONDITIONS	SERVICE CONDITIONS
Name: Secondary Clarifiers Scum	Capacity (L/min): Rated: 420	Ambient Temperature (°C): Min: 5 Max: 40
Fluid Temperature (°C): Min: 5 Normal: 10-20 Max: 25	Total Dynamic Head (m): Rated: 10.0	Relative Humidity (%): Min: 0 Max: 90
Specific Gravity: 1.0-1.02 @ 20 °C		
Vapour Pressure (kPa): 2.5 @ 20 °C		Altitude (m): 228
Viscosity (cp): 1.0-25 @ 20 °C		☒ Indoor ☒ Heated
pH: 6.5-7.5		☐ Outdoor ☐ Unheated
Total Suspended Solids (% by wt.): 0.1-1.0		Area Electrical Classification: Unclassified
Corrosion/Erosion/Abrasion Caused By: _____	NPSH Available (m): Rated: 11	
Remarks: _____	Remarks: _____	Remarks: _____

PERFORMANCE REQUIREMENTS (manufacturer to supply missing data)

Max. Pump Speed (rpm): 1200	Min. Shut-off Head (m): 12	Factory Testing:
	Min. Solids Passage (mm): 100	☒ Functional ☒ Performance
	Min. NPSH Margin Ratio: 1.5	Field Testing:
		☒ Functional ☒ Performance
		Hydrostatic Test Pressure (kPag):
		150% of pump shut-off head

Remarks: _____

PUMP DATA SHEET NO. 1 (cont'd)
SECONDARY CLARIFIERS SCUM PUMPS

PUMP CONSTRUCTION DETAILS (manufacturer to supply missing data)

Nozzles						Miscellaneous Connections		
	NPS (mm)	ANSI Class	Facing	Location			Size (mm)	Location
Suction	150	125	FF	End		Drain		
Discharge	75 or 100	125	FF	Top		Vent		

Impeller:
Type: Chopper centrifugal
Diameter (in): TBD by mfr

Casing Mount:
☒ Horizontal ☐ Vertical
☐ Centerline ☐ Near Centerline
☒ Foot ☐ Bracket

Motor Coupling:
☒ Direct ☐ Line shaft
☐ V-belt (side) ☐ V-belt (overhead)

Vent and Drain Connections:
☐ Tapped and plugged

Suction and Discharge Gauge Connections:
☐ Tapped and plugged

Packing:
Type: n/a
Manufacturer: n/a
Size/No. of Rings: n/a

Mechanical Seal:
Type: As specified
Manufacturer: Mfr's standard
Model: Mfr's standard

Bearings:
Radial (type/No.): Mfr's standard
Thrust (type/no.): Mfr's standard
Min. ABMA B-10 Life: 50,000 hrs
Lubrication: ☐ Grease ☐ Oil

Shaft Coupling:
Type: Flexible spacer
Manufacturer: Mfr's standard
Model: Mfr's standard

Remarks: Mechanical seal with external source of flushing water.

MATERIALS OF CONSTRUCTION (manufacturer to supply missing data)

Casing: ASTM A536 ductile cast iron or ASTM A48 cast iron	Cutter Bar: ASTM A53 ductile cast iron or ASTM A148 Gr, 90-60 cast alloy steel, heat treated to 500 BHN	Shaft: AISI 4140 heat treated steel
Impeller: ASTM A148 Gr. 90-60 cast alloy steel, heat treated to 500 BHN minimum		Shaft Sleeve: Type 410 or 17-4PH heat treated stainless steel

Remarks:

ADDITIONAL REQUIREMENTS

MOTOR DATA SHEET NO. 1
SECONDARY CLARIFIERS SCUM PUMPS

Project: City of Winnipeg SEWPCC Upgrading/Expansion Project

Process/Facility: High Rate Clarification

Service: Secondary Clarifiers Scum

Pump Name: Scum Pumps

Equipment Tag Number(s): P-S316, P-S317

Type: Squirrel-cage induction meeting requirements of NEMA MG 1.

Manufacturer: For multiple units of same type of equipment, furnish motors and accessories from single manufacturer.

Hazardous Location: ☐ Furnish motors for hazardous (classified) locations that conform to UL 674 and have an applied UL listing mark.

Motor Size (kW): 3.7 ☐ Min. ☐ Max.	Guaranteed Minimum Efficiency at Full Load (%): 93.0
Voltage: 575	Guaranteed Minimum Power Factor at Full Load (%): Mfr's standard
Phase: 3	Service Factor (at rated max. ambient temperature): ☐ 1.0 ☒ 1.15
Frequency (Hz): 60	Enclosure Type: TEFC
Synchronous Speed (rpm): 1200	Mounting Type: ☒ Horizontal ☐ Vertical
☒ Constant Speed	Vertical Shaft: ☐ Solid ☐ Hollow
☐ Two-speed Speed (rpm): Slow _____ Fast _____	Vertical Thrust Capacity (N): Up _____ Down _____ ☐ Adjustable Speed Application (inverter duty rated) In accordance with Section 26 29 23, Variable Frequency Drives.
☐ Multi-speed Speed (rpm): Min. Max.	
Variable Speed Load Classification: ☐ Variable Torque ☐ Constant Torque ☐ Constant Power	☐ Thermal Protection: ☐ Space Heater: _____ volts, single phase ☐ Oversize main terminal (conduit) box for motors ☐ Terminal for connection of equipment grounding wire in each terminal box
Winding: ☐ One ☐ Two	

ADDITIONAL REQUIREMENTS

☒ In accordance with Section 26 20 00, Low-Voltage AC Induction Motors.

PUMP DATA SHEET NO. 2
FERMENTER RECIRCULATION PUMPS

Project: City of Winnipeg SEWPCC Upgrading/Expansion Project

Process/Facility: Primary Sludge Fermenters

Service: Fermenter Recirculation

Pump Name: Fermenter Recirculation Pump

Equipment Tag Number(s): P-D321, P-D322, P-D-D323

Manufacturer and Model: (1) Vaughan Model HE4L6 impeller diameter 191 mm

(2) Hayward Gordon XCS10C impeller diameter 203 mm

(3) _____

Number of Pumps Required: Three	Pump Type: Chopper centrifugal

Drive Type: ☒ Constant Speed ☐ Two Speed ☐ Variable Speed

LIQUID PROPERTIES	OPERATING CONDITIONS	SERVICE CONDITIONS
Name: Fermenter Sludge	Capacity (L/sec): Rated: 15 2nd: 28	Ambient Temperature (°C): Min: 5 Max: 40
Fluid Temperature (°C): Min: 5 Normal: 10-20 Max: 25	Total Dynamic Head (m): Rated: 6.0 2nd: 4.5	Relative Humidity (%): Min: 0 Max: 90
Specific Gravity: 1.0-1.02 @ 20 °C		
Vapour Pressure (kPa): 2.5 @ 20 °C		Altitude (m): 228
Viscosity (cp): 1.0-25 @ 20 °C		☒ Indoor ☒ Heated
pH: 6.5-7.5		☐ Outdoor ☐ Unheated
Total Suspended Solids (% by wt.): 2 to 3		Area Electrical Classification: Unclassified
Corrosion/Erosion/Abrasion Caused By: Fermented primary sludge	NPSH Available (m): Rated: 14	
Remarks:	Remarks:	Remarks:

PERFORMANCE REQUIREMENTS (manufacturer to supply missing data)

Max. Pump Speed (rpm): 1200	Min. Shut-off Head (m): 7.5	Factory Testing:
	Min. Solids Passage (mm): 100	☒ Functional ☒ Performance
	Min. NPSH Margin Ratio: 1.5	Field Testing:
		☒ Functional ☒ Performance
		Hydrostatic Test Pressure (kPag):
		200 kPa minimum

Remarks: _____

PUMP DATA SHEET NO. 2 (cont'd)
FERMENTER RECIRCULATION PUMPS

PUMP CONSTRUCTION DETAILS (manufacturer to supply missing data)

Nozzles						Miscellaneous Connections		
	NPS (mm)	ANSI Class	Facing	Location			Size (mm)	Location
Suction	150	125	FF	End		Drain		
Discharge	100	125	FF	Top		Vent		

Impeller:
Type: Chopper centrifugal
Diameter (in):

Casing Mount:
☒ Horizontal ☐ Vertical
☐ Centerline ☐ Near Centerline
☒ Foot ☐ Bracket

Motor Coupling:
☒ Direct ☐ Line shaft
☐ V-belt (side) ☐ V-belt (overhead)

Vent and Drain Connections:
☐ Tapped and plugged

Suction and Discharge Gauge Connections:
☐ Tapped and plugged

Packing:
Type: n/a
Manufacturer: n/a
Size/No. of Rings: n/a

Mechanical Seal:
Type: As specified
Manufacturer: Mfr's standard
Model: Mfr's standard

Bearings:
Radial (type/No.): Mfr's standard
Thrust (type/no.): Mfr's standard
Min. ABMA B-10 Life: 50,000 hrs
Lubrication: ☐ Grease ☐ Oil

Shaft Coupling:
Type: Flexible spacer
Manufacturer: Mfr's standard
Model: Mfr's standard

Remarks: Mechanical seal shall not require external source of flushing water.

MATERIALS OF CONSTRUCTION (manufacturer to supply missing data)

Casing: ASTM A536 ductile cast iron or ASTM A48 cast iron	Cutter Bar: 316SS	Shaft: 316SS
Impeller: CD4MCu		Shaft Sleeve: Type 410 or 17-4PH heat treated stainless steel

Remarks:

ADDITIONAL REQUIREMENTS

MOTOR DATA SHEET NO. 2
FERMENTER RECIRCULATION PUMPS

Project: City of Winnipeg SEWPCC Upgrading/Expansion Project

Process/Facility: Primary Sludge Fermenters

Service: Fermenter Recirculation

Pump Name: Fermenter Recirculation Pump

Equipment Tag Number(s): P-D321, P-D322, P-D323

Type: Squirrel-cage induction meeting requirements of NEMA MG 1.

Manufacturer: For multiple units of same type of equipment, furnish motors and accessories from single manufacturer.

Hazardous Location: ☐ Furnish motors for hazardous (classified) locations that conform to UL 674 and have an applied UL listing mark.

Motor Size (kW): 5.6 ☒ Min. ☒ Max.	Guaranteed Minimum Efficiency at Full Load (%): 93.0
Voltage: 575	Guaranteed Minimum Power Factor at Full Load (%): Mfr's standard
Phase: 3	Service Factor (at rated max. ambient temperature): ☐ 1.0 ☒ 1.15
Frequency (Hz): 60	Enclosure Type: TEFC
Synchronous Speed (rpm): 1200	Mounting Type: ☒ Horizontal ☐ Vertical
☒ Constant Speed	Vertical Shaft: ☐ Solid ☐ Hollow
☐ Two-speed Speed (rpm): Slow _____ Fast _____	Vertical Thrust Capacity (N): Up _____ Down _____
☐ Multi-speed Speed (rpm): Min. Max.	☐ Adjustable Speed Application (inverter duty rated) In accordance with Section 26 29 23, Variable Frequency Drives.
Variable Speed Load Classification: ☐ Variable Torque ☐ Constant Torque ☐ Constant Power	☐ Thermal Protection: ☐ Space Heater: _____ volts, single phase ☐ Oversize main terminal (conduit) box for motors ☐ Terminal for connection of equipment grounding wire in each terminal box
Winding: ☐ One ☐ Two	

ADDITIONAL REQUIREMENTS

☒ In accordance with Section 26 20 00, Low-Voltage AC Induction Motors.

Motor kW rating of 5.6 kW includes a safety factor due to the nature of the application

SECTION 43 40 02

FIBERGLASS REINFORCED PLASTIC TANK

PART 1 GENERAL

1.1 REFERENCES

A. The following is a list of standards which may be referenced in this section:
   1. CAN/CGSB-41.22-93: Fiberglass-Reinforced Plastic Corrosion-Resistant Equipment.
   2. American National Standards Institute (ANSI): B16.5, Pipe Flanges and Flanged Fittings.
   3. American Society of Mechanical Engineers (ASME): RTP-1, Reinforced Thermoset Plastic Corrosion-Resistant Equipment.
   4. American Society for Testing and Materials (ASTM):
      a. C582, Standard Specification for Contact-Molded Reinforced Thermosetting Plastic (RTP) Laminates for Corrosion Resistant Equipment.
      b. D2563, Standard Practice for Classifying Visual Defects in Glass-Reinforced Plastic Laminate Parts.
      c. D2583, Standard Test Method for Indentation Hardness of Rigid Plastics by Means of a Barcol Impresser.
      d. D2584, Standard Test Method for Ignition Loss of Cured Reinforced Resins.
      e. D3299, Standard Specification for Filament Wound Glass-Fiber-Reinforced Thermoset Resin Chemical Resistant Tanks.
      f. D4097, Standard Specification for Contact-Molded Glass-Fiber-Reinforced Thermoset Resin Chemical-Resistant Tanks.
      g. Manitoba Building Code (MBC).

1.2 DEFINITIONS

A. FRP: Fiberglass Reinforced Plastic.

1.3 DESIGN REQUIREMENTS

A. Design tank, including resin selection, wall thickness, methods and locations of support, anchors, and stiffener requirements. Design shall be prepared and sealed by a Professional Engineer registered in the Province of Manitoba.

B. Coordinate with manufacturer(s) of equipment to be installed in the tanks to assure that the tank design is suitable for use with the equipment actually being supplied. Secure the following:
   1. Drawings of any supports required by the equipment manufacturer(s).
   2. Description of any tank modifications required by the equipment manufacturer(s) to use the equipment.

1.4 SUBMITTALS

A. Shop Drawings:
   1. Fabricators catalog information, descriptive literature, specifications, and identification of materials of construction. Include complete resin system information.
   2. Letter from resin manufacturer stating that selected resin is suitable for the chemical stored.
   3. Detailed fabrication drawings with Professional Engineering stamp from engineer registered in the Province of Manitoba.
   4. Complete design calculations for tanks, supports, anchors and appropriate accessories.
   5. Tank data indicating equipment number, pressure rating, diameter, straight shell lengths, overall lengths, wall thickness, corrosion barrier thickness, and details of nozzle designs.
   6. Tank capacity chart indicating cubic metres for each mmof depth and cumulative total from bottom.
   7. Fabricator's detailed requirements for tank foundations.
   8. Recommended bolt torque for all bolted FRP connections.
   9. Confirmation letter of tank indicating that tank’s design meets ASME RTP-1 including hold down lugs.

B. Samples:
   1. Laminate sample representative of production quality of surface finish and visual imperfections.

C. Quality Control Submittals:
   1. Fabricator's Certificate of Compliance with fabrication requirements.
   2. Qualifications of Fabricator's Quality Assurance Supervisor.
   3. Copy of the fabricator's Quality Assurance Program.
   4. Quality Assurance Inspection:
      a. Qualifications of Independent FRP Quality Assurance Inspector.
      b. Initial QA Inspection Report.
      c. Certification of Factory Testing.
   5. Certification that the equipment supports, tank design, and access nozzles have been coordinated with the actual equipment being furnished.
   6. Special shipping, storage and protection, and handling instructions.
   7. Fabricator's written/printed installation and tank support instructions.
   8. Contractor's Certificate of Proper Installation in accordance with Section 01 43 33, Contractor Field Services.
   9. Drawings and other information required in Article Design Requirements.
   10. Submit written certification from Professional Engineer licensed in the Province of Manitoba stating that support systems, anchorage, and equipment have been designed according to requirements of the MBC for post-disaster structures.

D. Contract Closeout Submittals:
   1. Service records for repairs performed during construction.

1.5 QUALITY ASSURANCE

A. Fabricator's Quality Assurance Supervisor: Minimum of five (5) years' experience in the fabrication of fiberglass structures.

B. Designer: Registered Professional Engineer licensed in the Province of Manitoba.

C. Independent FRP Quality Assurance Inspector:
   1. Minimum 5 years' experience as an FRP inspector.
   2. Representing a corporately and financially independent organization which can function as an unbiased inspection authority.
   3. Professionally independent of manufacturer, suppliers, and installers of systems being inspected.

1.6 DELIVERY, STORAGE, AND HANDLING

A. Prepare and protect the tanks for shipment as follows:
   1. Mount tanks on padded cradles if shipped horizontally or on a suitable skid if shipped vertically.
   2. Protect all flanged nozzles with wooden blinds bolted to the flange and having a diameter of 50 mm greater than the outside diameter of the flange.
   3. Provide either rigid plugs inside the ends to prevent deflection or wooden boxes for all unflanged components. Brace the open ends of tanks with a suitable stiffening member to prevent deflection.
   4. Do not ship components or other pieces loose inside the tanks.
   5. Load tanks with at least 50 mm clearance between the tank (including fittings) and the bulkheads or bed of the vehicle.
   6. Regardless of the mode of transportation, firmly fasten and pad all components to prevent shifting of the load or flexing of components while in transit.

1.7 SEQUENCING AND SCHEDULING

A. Tanks shall not be shipped from factory until Contract Administrator's review of Certification of Factory Testing is completed.

PART 2 PRODUCTS

2.1 SUPPLEMENTS

A. Some specific requirements relative to this section are attached as supplements at the end of the section.

2.2 DESIGN REQUIREMENTS

A. Design tanks, including resin selection, wall thickness, methods and locations of support, anchors, and stiffener requirements. Design shall be prepared and sealed by a Professional Engineer registered in the Province of Manitoba.

2.3 MATERIALS

A. Design tanks, anchorage, and support systems for vertical and lateral loading in accordance with MBC.

B. Filament-Wound ASME RTP-1
   1. Design tanks, liner, and hold down lugs to RTP-1.

C. Resin:
   1. Suitable for chemicals stored.
   2. Premium grade and corrosion resistant, vinyl ester for the corrosion liner and vinyl ester with antinomy for the exterior to achieve a Class 1 flame spread of 25 or less as per ASTM E84.
   3. Add ultraviolet absorbers to the surfacing resin to improve weather resistance.
   4. No dyes, pigments, or colorants except in the exterior gel coat.
   5. No fillers or thixotropic agents.
   6. Curing System:
      a. As recommended by resin manufacturer or as specified herein.
      b. Apply a white color coat after inspection of the laminate has been completed.
      c. Cure all products as specified in ASTM D3299 for filament wound tanksand ASTM D4097 for contact molded tanks.
      d. Measure Barcol hardness according to ASTM D2583.
   7. For hypohclorites and sodium hydroxide service, post-cure the tank and appurtenances in accordance with resin manufacturer's recommendation for time and temperature. Post-curing should be completed with warm-to-hot dry air, free of combustion products. Hot spots shall be avoided.
   8. For hypochlorite service, no MEKP cobalt catalyst system shall be allowed in the liner. Cure liner with benzoyl peroxide-dimethyl aniline throughout. The structural layer may be cured with either catalyst system.

D. Reinforcement Veil:
   1. For hypochlorites, or sodium hydroxide service: chemical surfacing mat, two layers of polyester fabric, 12 to 16 mils thick, with a finish and a binder compatible with the lay-up resin.
   2. For all other chemicals: chemical surfacing mat, Type C (chemical) glass, 10 mils thick, with a finish and a binder compatible with the lay up resin.

E. Laminate:
   1. Consists of inner surface (corrosion barrier), interior layer, and exterior layer (structural layer).
   2. Meet requirements of the mechanical properties and visual acceptance criteria in ASME RTP-1.

3. Reinforce inner surface with a resin-rich surfacing veil as specified herein.

F. Marking:
1. Identify each tank with fabricator's name, capacity in cubic metres, maximum temperature, design pressure/vacuum, specific gravity, pH, resin, minimum thickness, tank number, tank name, and date of manufacture.
2. Provide permanent marking. Seal decals, labels, etc., into laminate exterior with clear resin.

G. Nozzles:
1. Fabricate the nozzles to ASME RTP-1.
2. Finish flush with the inside surface of the tank unless otherwise indicated.
3. Gaskets:
   a. Provide two per nozzle, 3 mm thick full-face elastomeric material having a hardness of Shore A60 plus or minus 5.
   b. Material shall be suitable for the intended service.
4. All Flanged Nozzles: Rated at 700 kPa with other dimensions and bolting corresponding to ANSI B16.5 for 1035 kpag steel flanges.
5. The back face of all flanges shall be spot-faced, flat and parallel to the flange face of sufficient diameter to accept an SAE metal washer under the bolthead or nut.

2.4 APPURTENANCES

A. Sight Glass (Type 1):
1. Tubular type PVC with 25-mm flanged connections.
2. Furnish with valves, drain cock, Pyrex glass, and stainless steel guard rods.
3. All parts coming in contact with liquid shall be either PVC or glass.
4. Calibrate the tank in 300 liter increments and paint the calibrations adjacent to the level tube with graduations and boldface figures.
5. Manufacturers and Products:
   a. Ernst; Fig. A-2 PVC.
   b. Jacoby-Tarbox; Style T/LP 1.

B. Supports:
1. Pipe Supports:
   a. Provide for all tank overflow pipes, and loading pipes.
   b. Spacing of supports shall be as recommended by the fabricator, but shall not be greater than 1200 mm on center.
   c. Shall be designed to allow removal of the pipe.
   d. FRP complete with necessary bolts, nuts and washers.

C. Lifting Lugs: Provide suitably attached for all tanks weighing over 45 kgs.

D. Vents:
1. Gooseneck vents to the outside for all chemical tanks shall be provided with 316 stainless steel with PTFE coated interior for corrosion protection.
2. All gooseneck vents shall be provided with stainless steel insect screen, PTFE coated for corrosion protection.

E. Chemical fill lines:
   1. Provide heavy duty black polypropyelene with lock arm Part B Camlock – MNPT coupler at the end of ferric chloride and sodium bisulphite fill lines.
   2. Provide heavy duty black polypropyelene with lock arm Part B Camlock – FNPT coupler at the end of sodium hypochlorite and sodium hydroxie fill lines.

F. Anchor Bolts: Type 316, stainless steel bolts, sized by fabricator and at least 13 mm in diameter, or as shown and as specified in Section 05 50 00, Metal Fabrications (Basic).

G. Immersion Heaters and Thermal Wells:
   1. Provide immersion heater (s) with thermal wells for sodium bisulphite and sodium hydroxide bulk storage tanks.
   2. Immersion heaters shall be sized for freeze protection with the following design parameters:
      a. Indoor ambient temperature: -10 degrees C
      b. Target temperature for freeze protection: 15 degrees C for sodium hydroxide tank and 10 degrees for sodium bisulphite tank.
      c. Tank insulation: fiberglass, 25mm thick
      d. Heater to be rated for 600V supply.
      e. Nema 4X terminal box with high limit auto reset thermostat. Provide fail-safe voltage free contact for high temperature alarm for use by the Plant Control System
   3. Thermal Wells: Immersion heaters shall be provided with 316 stainless steel thermal wells, sized to suit.

H. Insulation and Jacketing (sodium hydroxide tanks and sodium bisulphite tank only):
   1. Provide 25mm thick, medium density (32kg/m^3 or 2lb/ft^3), closed cell polyurethane spray foam insulation, apply as two-component on sodium hydroxide tanks and sodium bisulphite tank. Insulation shall meet CAN/ULC 705.1.
   2. Provide 3mm thick vinyl ester resin jacketing with Class 1 flame spread of 25 or less as per ASTM E84.

I. FRP Chemical Trays:
   1. Provide three (3) FRP chemical trays with the following design requirements:
      a. Tray 1 (inside Chemical Building) interior dimensions: 600mm (width) x 150mm (depth).
      b. Tray 2 (from Chemical Building to Gallery 5A) interior dimensions: 600mm (width) x 150mm (depth).
      c. Tray 3 (from Gallery 5A through HRC Channels) interior dimensions: 450mm (width) x 150mm (depth).
      d. Solid bottom and leak tight.
      e. Load: trays shall be used to carry a variety of chemical pipes: sodium hypochlorite, sodium hydroxide, and sodium bisulphite. These pipes will take up the full depth of the tray's depth.
      f. Spacers shall be provided to fill in the gap between chemical pipes and the bottom of FRP trays at maximum 1.5m span.
      g. Tray 1 (600mm x 150mm) is used to carry the following chemical lines:
         1) 75mm sodium hydroxide line (25mm line with 25mm thick insulation and heat tracing) to Coagulation Zone TK-K111 and HRC Effluent Channel 1

2) 75mm sodium hydroxide line (25mm line with 25mm thick insulation and heat tracing) to Coagulation Zone TK-K121 and HRC Effluent Channel 2
3) 25mm sodium hypochlorite line to RAS Pipe
4) 38mm sodium hypochlorite line to Coagulation Zone 1
5) 38mm sodium hypochlorite line to Coagulation Zone 2
6) 100mm sodium bisulphite line (50mm line with 25mm thick insulation) to HRC Effluent Channel
7) 100mm sodium bisulphite line (50mm line with 25mm thick insulation) to Non-Potable Tempered Water.

h. Tray 2 (600mm x 150mm) is used to carry the following chemical lines:
1) 75mm sodium hydroxide line (25mm line with 25mm thick insulation and heat tracing) to Coagulation Zone TK-K111 and HRC Effluent Channel 1
2) 75mm sodium hydroxide line (25mm line with 25mm thick insulation and heat tracing) to Coagulation Zone TK-K121 and HRC Effluent Channel 2
3) 25mm sodium hypochlorite line to RAS Pipe
4) 38mm sodium hypochlorite line to Coagulation Zone 1
5) 38mm sodium hypochlorite line to Coagulation Zone 2
6) 100mm sodium bisulphite line (50mm line with 25mm thick insulation) to HRC Effluent Channel

i. Tray 3 (450mm x 150mm) is used to carry the following chemical lines:
1) 75mm sodium hydroxide line (25mm line with 25mm thick insulation and heat tracing) to Coagulation Zone TK-K111 and HRC Effluent Channel 1
2) 75mm sodium hydroxide line (25mm line with 25mm thick insulation and heat tracing) to Coagulation Zone TK-K121 and HRC Effluent Channel 2
3) 38mm sodium hypochlorite line to Coagulation Zone 1
4) 38mm sodium hypochlorite line to Coagulation Zone 2

j. All chemical lines are either PVC or CPVC schedule 80. Trays shall be provided with radius design to suit chemical lines fittings for directional changes.

k. Reference contract drawings for chemical trays profile, approximate lengths and required fittings.

2.5 SOURCE QUALITY CONTROL

A. Provide services of an Independent FRP Testing Inspector to be present at the point of manufacture at the time fabrication is started, to perform the following:
1. Observe manufacturing methods, machinery, and techniques to assure compliance with industry standards and these specifications.
2. Observe initial fabrication to verify compliance with these specifications.
3. Observe quality control methods for mixing resins and testing of completed equipment.
4. Generally observe quality of other, ongoing fabrication.
5. Prepare an Initial QA Inspection Report.

B. Provide services of an Independent FRP Testing Inspector to be present at the point of manufacture, upon completion of fabrication and prior to shipment, to perform or witness the following:
1. Visual inspection to the requirements of ASME RTP-1.
2. Barcol Hardness measurements per ASTM D2583.
3. Acetone sensitivity test for all internal secondary bonds.

4. Glass content by ignition loss on three cutouts (samples) per ASTM D2584.
5. Hydrostatic Leak Test:
   a. Perform on each tank.
   b. Fill to top nozzle; allow to stand for 2 hours with no visible leakage.

C. Repairs deemed acceptable by the Independent FRP Testing Inspector must be approved by Contract Administrator.

D. Identify and retain all cutouts. Contract Administrator may select certain cutouts for testing for physical properties of the laminate.

E. Factory Test Reports: Certify the results, by signature, of the following:
   1. Inspections.
   2. Results of hydrostatic testing.
   3. Test Reports of physical properties of standard laminates.

2.6 MANUFACTURERS

A. Approved Manufacturers are:
   1. Structural Composite Technologies.
   2. ZCL Composite.
   3. Filamat.
   4. Alcore Fabricating Corp.

PART 3 EXECUTION

3.1 INSTALLATION

A. In accordance with the fabricator's written instructions.

B. Accurately place anchor bolts using templates furnished by the fabricator and as specified in Section 05 50 00, Metal Fabrications (Basic).

3.2 FIELD QUALITY CONTROL

A. Functional Test:
   1. Conduct on each tank.
   2. Hydrostatic leak test with the tank full of clean water. Allow water to stand for 24 hours to verify no leakage.

3.3 MANUFACTURER’S FIELD SERVICES

A. Provide Manufacturer’s Representative at Site in accordance with Section 01 43 33, Contractor Field Services, and Section 01 91 14, Equipment Testing and Facility Startup for installation assistance, inspection and certification of proper installation and startup assistance for specified component, subsystem, equipment, or system.

3.4 SUPPLEMENTS

A. The supplements listed below, following "End of Section," are part of this specification.
   1. FRP Tank Schedule.
   2. Data Sheets:
      a. Ferric Chloride Bulk Storage Tank No. 1
      b. Ferric Chloride Bulk Storage Tank No. 2
      c. Ferric Chloride Bulk Storage Tank No. 3
      d. Sodium Hypochlorite Bulk Storage Tank No. 1
      e. Sodium Hypochlorite Bulk Storage Tank No. 2
      f. Sodium Hydroxide Bulk Storage Tank
      g. Sodium Bisulphite Bulk Storage Tank

END OF SECTION

FRP Tank Schedule				
Name of Tank[a]	Ferric Chloride	Sodium Hypochlorite	Sodium Hydroxide	Sodium Bisulphite
Equipment Numbers	TK-C101, TK-C102, TK-C103	TK-C201, TK-C202	TK-C205	TK-C301
Filament-wound or Contact-molded	Filament-wound	Filament-wound	Filament-wound	Filament-wound
Minimum Capacity Measured to High Solution Level (litres)	40,000	35,000	35,000	17,000
Installation (Vertical/Horizontal)	Vertical	Vertical	Vertical	Vertical
Diameter (meters)	3.4	3.0	3.0	2.1
Straight Shell Height (meters)	5.3	5.3	5.3	5.3
Support (saddles, flat pad, legs)	Flat pad	Flat pad	Flat pad	Flat pad
Type of Bottom Head	Flat	Flat	Flat	Flat
Type of Top Head	Flat	Flat	Flat	Flat
Ladder Required (Yes/No)	No	No	No	No
Tank Location (indoor/outdoor)	Indoor	Indoor	Indoor	Indoor
Ambient Temperature Range (degrees C)	15-20	15-20	15-20	15-20
Exterior Loading (kg/sq.m):				
Personnel Roof Loads	Yes	Yes	Yes	Yes
Platforms	No	No	No	No
Mixers	No	No	No	No
Pipe Supports	Yes	Yes	Yes	Yes
Operating Contents:				
Temperature (degrees C, not to exceed 180)	>5	>5	>12	>10
Chemical Composition		NaOCl	NaOH	NaHSO3
Specific Gravity	1.42	1.17	1.53	1.33
Concentration	40%	10%	50%	38%
pH Range	<2	11-14	13.7	3.8-5.2
Sight Glass Type (1 or 2)	Type 1	Type 1	Type 1	Type 1
Sight Glass Tube Length (m)	5	5	5	5
Insulation/Heat Tracing (Yes/No)	No/No	No/No	Yes/No	Yes/No
Immersion Heating (Freeze Protection)	No	No	Yes	Yes
Nozzle Schedule	See data sheets	See data sheets	See data sheet	See data sheet

CH2MHILL®

TANK DATA SHEET
(NOT TO SCALE)

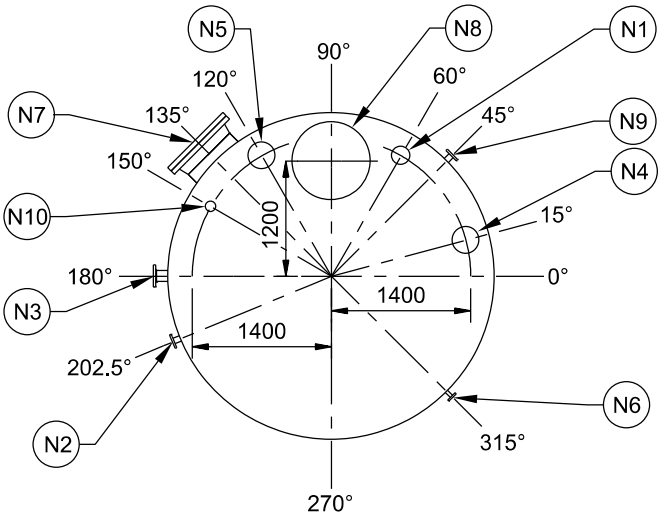

PLAN
NTS

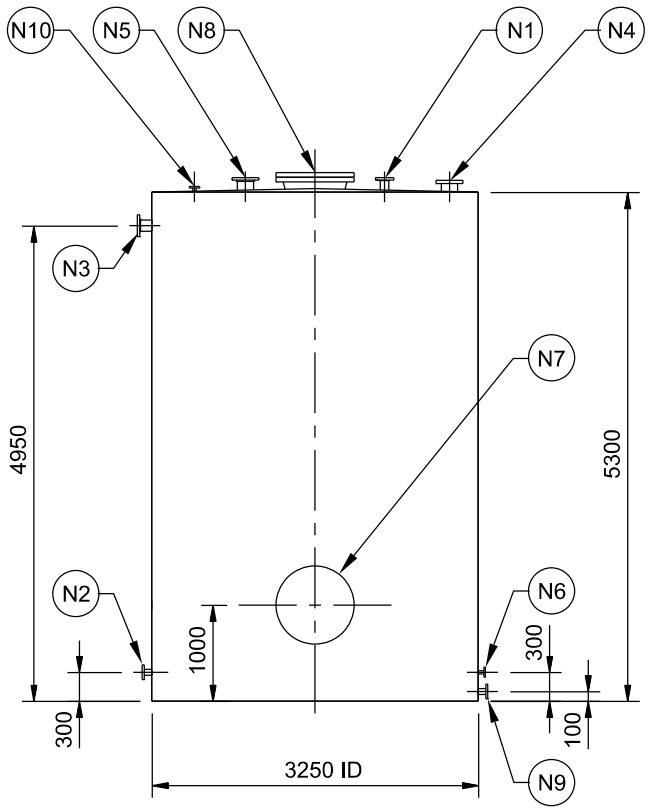

ELEVATION
NTS

Tag No.:	TK-C101	x	1
Project:	WINNIPEG	x	474248

FERRIC CHLORIDE BULK STORAGE TANK NO.1

GENERAL INFORMATION

SERVICE:	FERRIC CHLORIDE			No. Reqd 1
Capacity	40,000 L	Thickness	-	
Design code	ASME-RTP-1	Roof	FLAT	
Material	FRP	Shell	VERTICAL CYLINDER	
Temperature	-50 - 50 °C	Bottom	FLAT	

COATING	EXTERNAL	INTERNAL
Surface Prep	AS SPECIFIED	AS SPECIFIED
Primer	AS SPECIFIED	AS SPECIFIED
Finish Coat	AS SPECIFIED	AS SPECIFIED
Insulation Thk	AS SPECIFIED	AS SPECIFIED
Material	AS SPECIFIED	AS SPECIFIED
Cladding	AS SPECIFIED	AS SPECIFIED

NOZZLE SCHEDULE

MK	Size/Type	Service	Elev	Proj	Rad CL
N1	FLG-75	FILL	NA	150	1400
N2	FLG-50	OUTLET	300	100	NA
N3	FLG-100	OVERFLOW	4950	150	NA
N4	FLG-150	VENT	NA	150	1400
N5	FLG-100	LEVEL TRANSMITTER (ULTRASONIC)	NA	150	1400
N6	FLG-25	LEVEL GAUGE (SIGHT GLASS)	300	100	NA
N7	FLG-600	MANWAY	1000	150	NA
N8	FLG-600	MANWAY	NA	150	1200
N9	FLG-50	DRAIN	100	100	NA
N10	FLG-25	RECIRCULATION	NA	100	1400

ACCESSORIES

Level Indicator	X	Handrails On Lid	
Ladder ☐ Int ☐ Ext		Baffles	
Stairs		Pipe Supports for Interior Piping	X
Walkway		Pipe Supports for Exterior Piping	X
Platform Clips		Lateral Restraint	
Anchor Lugs	X	Tie Down System	
Syphon Drain	X	Heat Trace	
Sump		Insulate	
Vortex Breaker		Spectacle Blinds for N1,N2,N3,	X
Inlet Baffle		N4 and N10	
Lifting Lugs	X		
Thief Hatch			
Access Manway	X		
Down Comer ☒ Int ☐ Ext	X		
Heater			
Pressure Vacuum Valve			

NOTES:

1. SEE SPECIFICATIONS FOR ADDITIONAL INFORMATION.
2. EXTEND FILL LINE (N1) TO 300mm FROM TANK BOTTOM. PROVIDE LATERAL SUPPORTS. PROVIDE 6mm PERFORATIONS EVERY 150mm ALONG LENGTH OF FILL LINE TO PREVENT BACK SIPHON.
3. PROVIDE BLIND FLANGE AND GASKETS FOR NOZZLE (N5).
4. ALL NOZZLES EXCEPT (N7, N8) SHALL BE CONICAL GUSSETED.
5. ACTUAL NUMBER AND LOCATION OF ANCHOR LUGS TO BE DETERMINED BY MANUFACTURER.
6. Elev = ELEVATION FROM TANK BOTTOM IN mm.
   Proj = PROJECTION DISTANCE IN mm.
   Rad CL = RADIAL CENTRE LINE IN mm.

CH2MHILL®

CH2MHILL®

TANK DATA SHEET

(NOT TO SCALE)

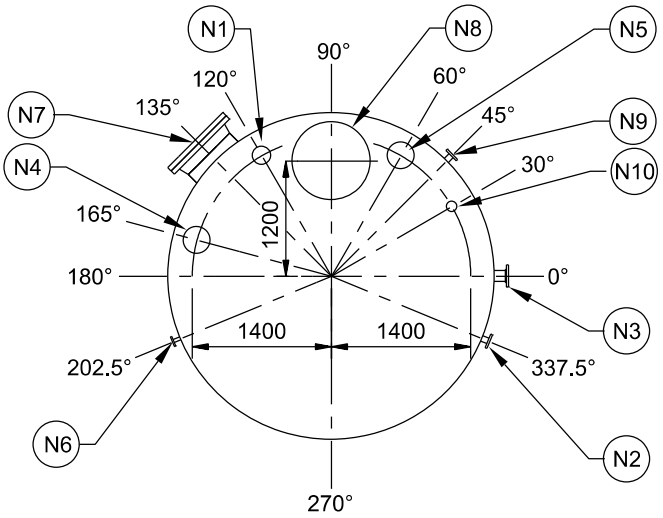

PLAN

NTS

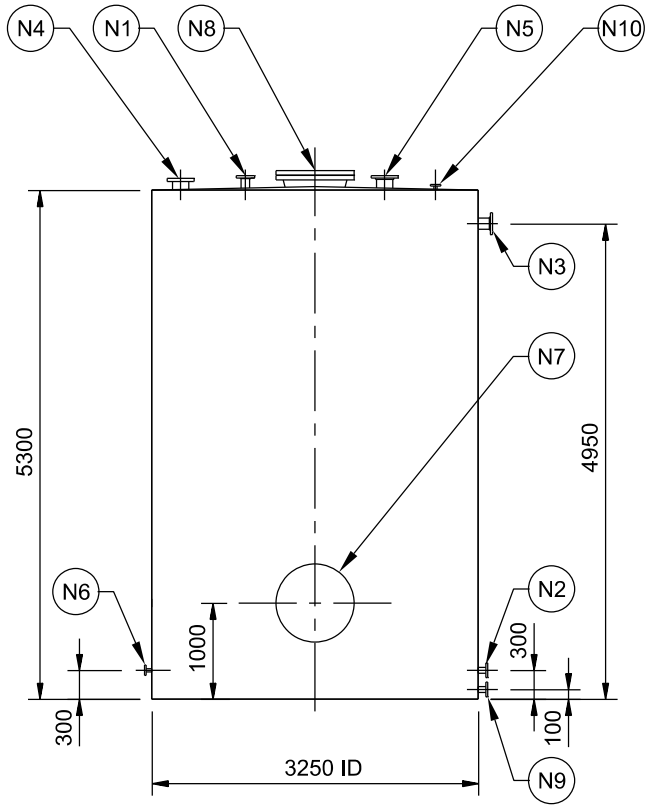

ELEVATION

NTS

Tag No.:	TK-C102	x	1
Project:	WINNIPEG	x	474248

FERRIC CHLORIDE BULK STORAGE TANK NO.2

GENERAL INFORMATION

SERVICE:	FERRIC CHLORIDE			No. Reqd 1
Capacity	40,000 L	Thickness	-	
Design code	ASME-RTP-1	Roof	FLAT	
Material	FRP	Shell	VERTICAL CYLINDER	
Temperature	-50 - 50 °C	Bottom	FLAT	

COATING	EXTERNAL	INTERNAL
Surface Prep	AS SPECIFIED	AS SPECIFIED
Primer	AS SPECIFIED	AS SPECIFIED
Finish Coat	AS SPECIFIED	AS SPECIFIED
Insulation Thk	AS SPECIFIED	AS SPECIFIED
Material	AS SPECIFIED	AS SPECIFIED
Cladding	AS SPECIFIED	AS SPECIFIED

NOZZLE SCHEDULE

MK	Size/Type	Service	Elev	Proj	Rad CL
N1	FLG-75	FILL	NA	150	1400
N2	FLG-50	OUTLET	300	100	NA
N3	FLG-100	OVERFLOW	4950	150	NA
N4	FLG-150	VENT	NA	150	1400
N5	FLG-100	LEVEL TRANSMITTER (ULTRASONIC)	NA	150	1400
N6	FLG-25	LEVEL GAUGE (SIGHT GLASS)	300	100	NA
N7	FLG-600	MANWAY	1000	150	NA
N8	FLG-600	MANWAY	NA	150	1200
N9	FLG-50	DRAIN	100	100	NA
N10	FLG-25	RECIRCULATION	NA	100	1400

ACCESSORIES

Level Indicator	X	Handrails On Lid	
Ladder ☐ Int ☐ Ext		Baffles	
Stairs		Pipe Supports for Interior Piping	X
Walkway		Pipe Supports for Exterior Piping	X
Platform Clips		Lateral Restraint	
Anchor Lugs	X	Tie Down System	
Syphon Drain	X	Heat Trace	
Sump		Insulate	
Vortex Breaker		Spectacle Blinds for N1,N2,N3,	X
Inlet Baffle		N4 and N10	
Lifting Lugs	X		
Thief Hatch			
Access Manway	X		
Down Comer ☒ Int ☐ Ext	X		
Heater			
Pressure Vacuum Valve			

NOTES:

1. SEE SPECIFICATIONS FOR ADDITIONAL INFORMATION.
2. EXTEND FILL LINE (N1) TO 300mm FROM TANK BOTTOM. PROVIDE LATERAL SUPPORTS. PROVIDE 6mm PERFORATIONS EVERY 150mm ALONG LENGTH OF FILL LINE TO PREVENT BACK SIPHON.
3. PROVIDE BLIND FLANGE AND GASKETS FOR NOZZLE (N5).
4. ALL NOZZLES EXCEPT (N7, N8) SHALL BE CONICAL GUSSETED.
5. ACTUAL NUMBER AND LOCATION OF ANCHOR LUGS TO BE DETERMINED BY MANUFACTURER.
6. Elev = ELEVATION FROM TANK BOTTOM IN mm.
   Proj = PROJECTION DISTANCE IN mm.
   Rad CL = RADIAL CENTRE LINE IN mm.

CH2MHILL®

CH2MHILL®

TANK DATA SHEET

(NOT TO SCALE)

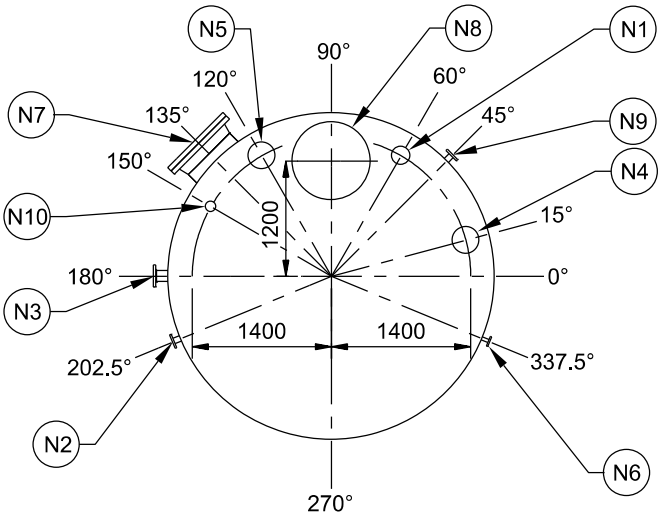

PLAN

NTS

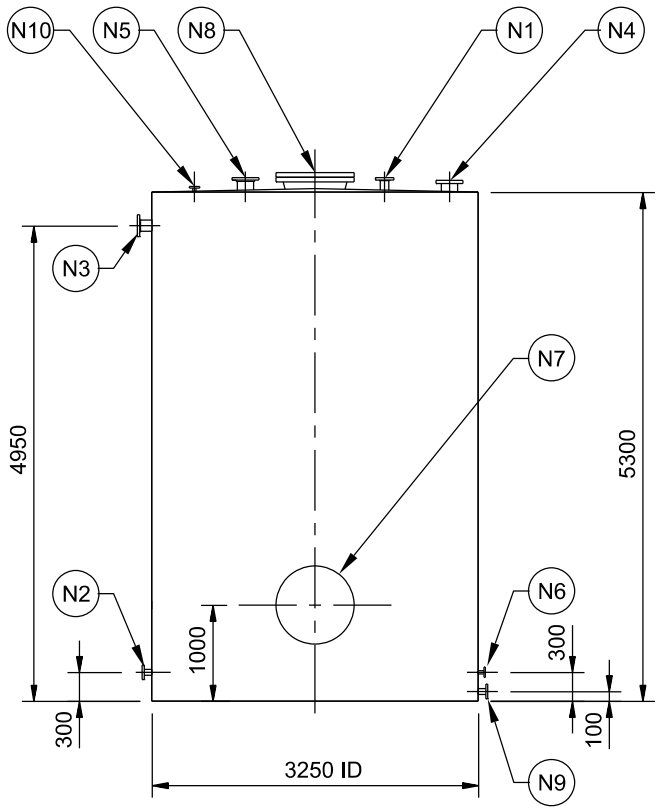

ELEVATION

NTS

Tag No.:	TK-C103	x	1
Project:	WINNIPEG	x	474248

FERRIC CHLORIDE BULK STORAGE TANK NO.3

GENERAL INFORMATION

SERVICE:	FERRIC CHLORIDE			No. Reqd 1
Capacity	40,000 L	Thickness	-	
Design code	ASME-RTP-1	Roof	FLAT	
Material	FRP	Shell	VERTICAL CYLINDER	
Temperature	-50 - 50 °C	Bottom	FLAT	

COATING	EXTERNAL	INTERNAL
Surface Prep	AS SPECIFIED	AS SPECIFIED
Primer	AS SPECIFIED	AS SPECIFIED
Finish Coat	AS SPECIFIED	AS SPECIFIED
Insulation Thk	AS SPECIFIED	AS SPECIFIED
Material	AS SPECIFIED	AS SPECIFIED
Cladding	AS SPECIFIED	AS SPECIFIED

NOZZLE SCHEDULE

MK	Size/Type	Service	Elev	Proj	Rad CL
N1	FLG-75	FILL	NA	150	1400
N2	FLG-50	OUTLET	300	100	NA
N3	FLG-100	OVERFLOW	4950	150	NA
N4	FLG-150	VENT	NA	150	1400
N5	FLG-100	LEVEL TRANSMITTER (ULTRASONIC)	NA	150	1400
N6	FLG-25	LEVEL GAUGE (SIGHT GLASS)	300	100	NA
N7	FLG-600	MANWAY	1000	150	NA
N8	FLG-600	MANWAY	NA	150	1200
N9	FLG-50	DRAIN	100	100	NA
N10	FLG-25	RECIRCULATION	NA	100	1400

ACCESSORIES

Level Indicator	X	Handrails On Lid	
Ladder ☐ Int ☐ Ext		Baffles	
Stairs		Pipe Supports for Interior Piping	X
Walkway		Pipe Supports for Exterior Piping	X
Platform Clips		Lateral Restraint	
Anchor Lugs	X	Tie Down System	
Syphon Drain	X	Heat Trace	
Sump		Insulate	
Vortex Breaker		Spectacle Blinds for N1,N2,N3,	X
Inlet Baffle		N4 and N10	
Lifting Lugs	X		
Thief Hatch			
Access Manway	X		
Down Comer ☒ Int ☐ Ext	X		
Heater			
Pressure Vacuum Valve			

NOTES:

1. SEE SPECIFICATIONS FOR ADDITIONAL INFORMATION.
2. EXTEND FILL LINE (N1) TO 300mm FROM TANK BOTTOM. PROVIDE LATERAL SUPPORTS. PROVIDE 6mm PERFORATIONS EVERY 150mm ALONG LENGTH OF FILL LINE TO PREVENT BACK SIPHON.
3. PROVIDE BLIND FLANGE AND GASKETS FOR NOZZLE (N5).
4. ALL NOZZLES EXCEPT (N7, N8) SHALL BE CONICAL GUSSETED.
5. ACTUAL NUMBER AND LOCATION OF ANCHOR LUGS TO BE DETERMINED BY MANUFACTURER.
6. Elev = ELEVATION FROM TANK BOTTOM IN mm.
   Proj = PROJECTION DISTANCE IN mm.
   Rad CL = RADIAL CENTRE LINE IN mm.

CH2MHILL®

CH2MHILL®

TANK DATA SHEET

(NOT TO SCALE)

N

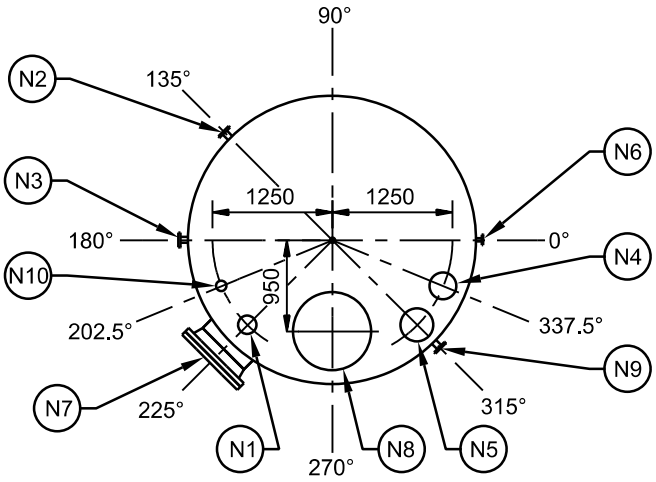

PLAN

NTS

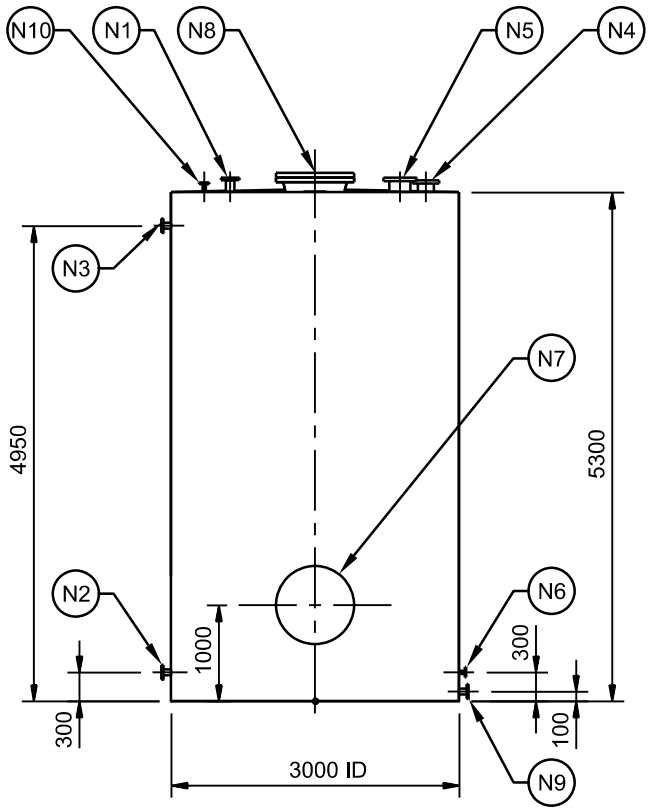

ELEVATION

NTS

Tag No.:	TK-C201	x	1
Project:	WINNIPEG	x	474248

SODIUM HYPOCHLORITE BULK STORAGE TANK NO.1

GENERAL INFORMATION

SERVICE:	SODIUM HYPOCHLORITE		No. Reqd 1
Capacity	35,000 L	Thickness	-
Design code	ASME-RTP-1	Roof	FLAT
Material	FRP	Shell	VERTICAL CYLINDER
Temperature	-50 - 50 °C	Bottom	FLAT

COATING	EXTERNAL	INTERNAL
Surface Prep	AS SPECIFIED	AS SPECIFIED
Primer	AS SPECIFIED	AS SPECIFIED
Finish Coat	AS SPECIFIED	AS SPECIFIED
Insulation Thk	AS SPECIFIED	AS SPECIFIED
Material	AS SPECIFIED	AS SPECIFIED
Cladding	AS SPECIFIED	AS SPECIFIED

NOZZLE SCHEDULE

MK	Size/Type	Service	Elev	Proj	Rad CL
N1	FLG-75	FILL	NA	150	1250
N2	FLG-50	OUTLET	300	100	NA
N3	FLG-100	OVERFLOW	4950	100	NA
N4	FLG-150	VENT	NA	150	1250
N5	FLG-100	LEVEL TRANSMITTER (ULTRASONIC)	NA	150	1250
N6	FLG-25	LEVEL GAUGE (SIGHT GLASS)	300	100	NA
N7	FLG-600	MANWAY	1000	150	NA
N8	FLG-600	MANWAY	NA	150	950
N9	FLG-50	DRAIN	100	100	NA
N10	FLG-25	RECIRCULATION	NA	100	1250

ACCESSORIES

Level Indicator	X	Handrails On Lid	
Ladder ☐ Int ☐ Ext		Baffles	
Stairs		Pipe Supports for Interior Piping	X
Walkway		Pipe Supports for Exterior Piping	X
Platform Clips		Lateral Restraint	
Anchor Lugs	X	Tie Down System	
Syphon Drain	X	Heat Trace	
Sump		Insulate	
Vortex Breaker		Spectacle Blinds for N1,N2,N3,	X
Inlet Baffle		N4 and N10	
Lifting Lugs	X		
Thief Hatch			
Access Manway	X		
Down Comer ☒ Int ☐ Ext	X		
Heater			
Pressure Vacuum Valve			

NOTES:

1. SEE SPECIFICATIONS FOR ADDITIONAL INFORMATION.
2. EXTEND FILL LINE (N1) TO 300mm FROM TANK BOTTOM. PROVIDE LATERAL SUPPORTS. PROVIDE 6mm PERFORATIONS EVERY 150mm ALONG LENGTH OF FILL LINE TO PREVENT BACK SIPHON.
3. PROVIDE BLIND FLANGE AND GASKETS FOR NOZZLE (N5).
4. ALL NOZZLES EXCEPT (N7, N8) SHALL BE CONICAL GUSSETED.
5. ACTUAL NUMBER AND LOCATION OF ANCHOR LUGS TO BE DETERMINED BY MANUFACTURER.
6. Elev = ELEVATION FROM TANK BOTTOM IN mm.
   Proj = PROJECTION DISTANCE IN mm.
   Rad CL = RADIAL CENTRE LINE IN mm.

CH2MHILL®

CH2MHILL®

TANK DATA SHEET
(NOT TO SCALE)

N

Tag No.:	TK-C202	x	1
Project:	WINNIPEG	x	474248

SODIUM HYPOCHLORITE BULK STORAGE TANK NO.2

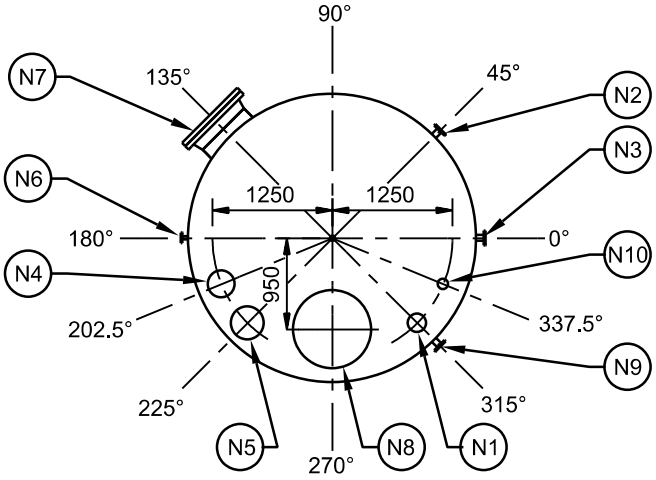

PLAN
NTS

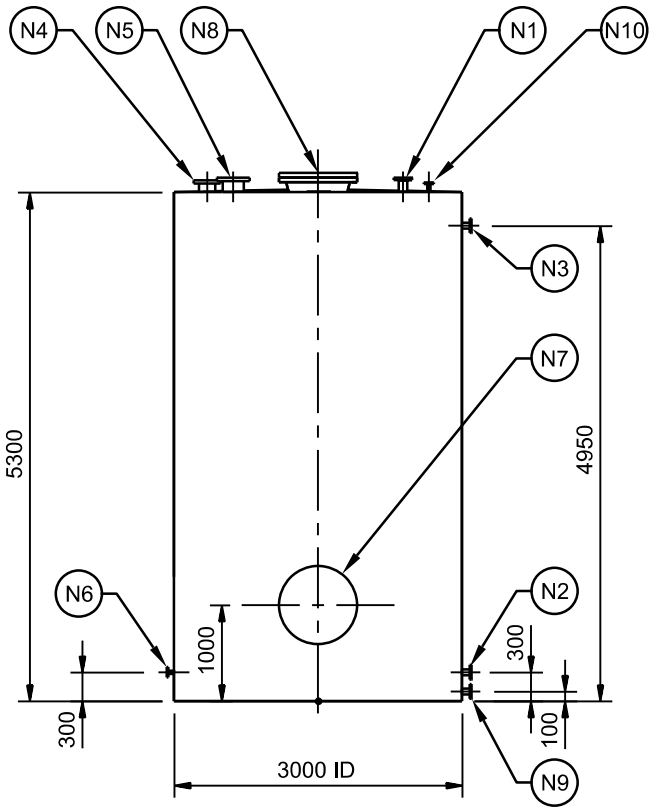

ELEVATION
NTS

GENERAL INFORMATION

SERVICE:	SODIUM HYPOCHLORITE		No. Reqd 1
Capacity	35,000 L	Thickness	-
Design code	ASME-RTP-1	Roof	FLAT
Material	FRP	Shell	VERTICAL CYLINDER
Temperature	-50 - 50 °C	Bottom	FLAT

COATING	EXTERNAL	INTERNAL
Surface Prep	AS SPECIFIED	AS SPECIFIED
Primer	AS SPECIFIED	AS SPECIFIED
Finish Coat	AS SPECIFIED	AS SPECIFIED
Insulation Thk	AS SPECIFIED	AS SPECIFIED
Material	AS SPECIFIED	AS SPECIFIED
Cladding	AS SPECIFIED	AS SPECIFIED

NOZZLE SCHEDULE

MK	Size/Type	Service	Elev	Proj	Rad CL
N1	FLG-75	FILL	NA	150	1250
N2	FLG-50	OUTLET	300	100	NA
N3	FLG-100	OVERFLOW	4950	100	NA
N4	FLG-150	VENT	NA	150	1250
N5	FLG-100	LEVEL TRANSMITTER (ULTRASONIC)	NA	150	1250
N6	FLG-25	LEVEL GAUGE (SIGHT GLASS)	300	100	NA
N7	FLG-600	MANWAY	1000	150	NA
N8	FLG-600	MANWAY	NA	150	950
N9	FLG-50	DRAIN	100	100	NA
N10	FLG-25	RECIRCULATION	NA	100	1250

ACCESSORIES

Level Indicator	X	Handrails On Lid	
Ladder ☐ Int ☐ Ext		Baffles	
Stairs		Pipe Supports for Interior Piping	X
Walkway		Pipe Supports for Exterior Piping	X
Platform Clips		Lateral Restraint	
Anchor Lugs	X	Tie Down System	
Syphon Drain	X	Heat Trace	
Sump		Insulate	
Vortex Breaker		Spectacle Blinds for N1,N2,N3,	X
Inlet Baffle		N4 and N10	
Lifting Lugs	X		
Thief Hatch			
Access Manway	X		
Down Comer ☒ Int ☐ Ext	X		
Heater			
Pressure Vacuum Valve			

NOTES:

1. SEE SPECIFICATIONS FOR ADDITIONAL INFORMATION.
2. EXTEND FILL LINE (N1) TO 300mm FROM TANK BOTTOM. PROVIDE LATERAL SUPPORTS. PROVIDE 6mm PERFORATIONS EVERY 150mm ALONG LENGTH OF FILL LINE TO PREVENT BACK SIPHON.
3. PROVIDE BLIND FLANGE AND GASKETS FOR NOZZLE (N5).
4. ALL NOZZLES EXCEPT (N7, N8) SHALL BE CONICAL GUSSETED.
5. ACTUAL NUMBER AND LOCATION OF ANCHOR LUGS TO BE DETERMINED BY MANUFACTURER.
6. Elev = ELEVATION FROM TANK BOTTOM IN mm.
   Proj = PROJECTION DISTANCE IN mm.
   Rad CL = RADIAL CENTRE LINE IN mm.

CH2MHILL®

TANK DATA SHEET

(NOT TO SCALE)

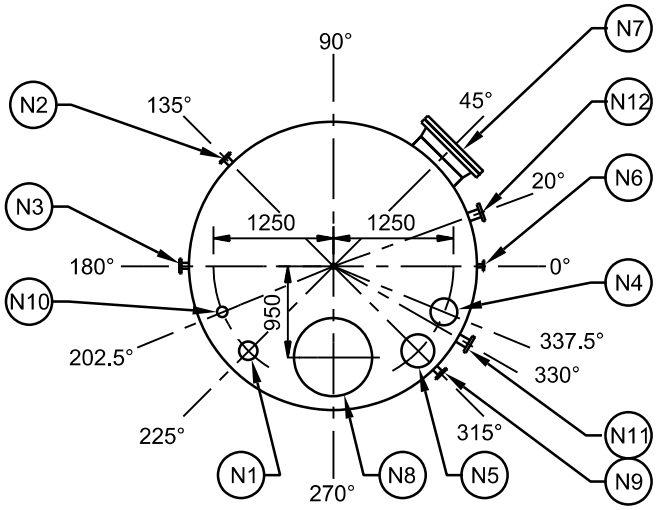

PLAN

NTS

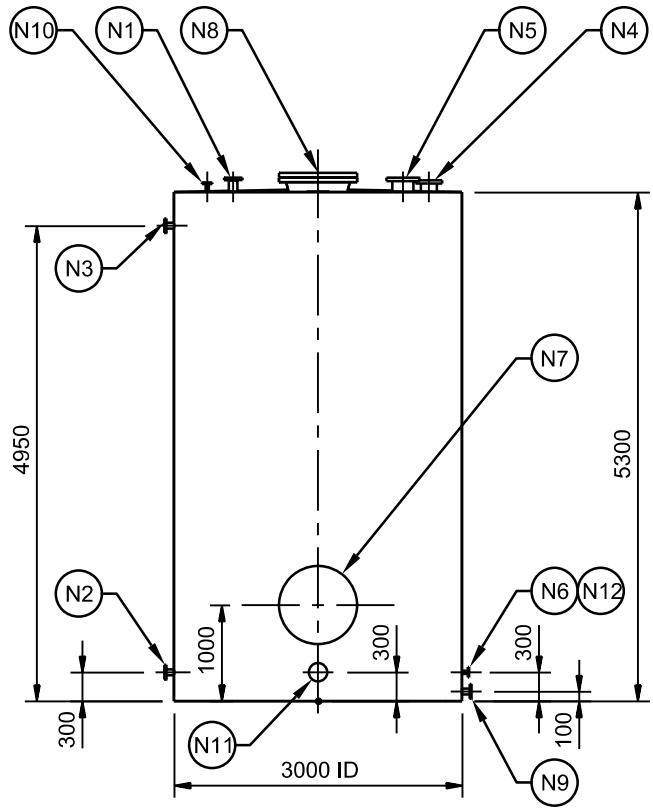

ELEVATION

NTS

Tag No.:	TK-C205	x	1
Project:	WINNIPEG	x	474248

SODIUM HYDROXIDE BULK STORAGE TANK

GENERAL INFORMATION

SERVICE:	SODIUM HYDROXIDE		No. Reqd 1
Capacity	35,000 L	Thickness	-
Design code	ASME-RTP-1	Roof	FLAT
Material	FRP	Shell	VERTICAL CYLINDER
Temperature	-50 - 50 °C	Bottom	FLAT

COATING	EXTERNAL	INTERNAL
Surface Prep	AS SPECIFIED	AS SPECIFIED
Primer	AS SPECIFIED	AS SPECIFIED
Finish Coat	AS SPECIFIED	AS SPECIFIED
Insulation Thk	AS SPECIFIED	AS SPECIFIED
Material	AS SPECIFIED	AS SPECIFIED
Cladding	AS SPECIFIED	AS SPECIFIED

NOZZLE SCHEDULE

MK	Size/Type	Service	Elev	Proj	Rad CL
N1	FLG-75	FILL	NA	150	1250
N2	FLG-25	OUTLET	300	100	NA
N3	FLG-100	OVERFLOW	4950	100	NA
N4	FLG-150	VENT	NA	150	1250
N5	FLG-100	LEVEL TRANSMITTER (ULTRASONIC)	NA	150	1250
N6	FLG-25	LEVEL GAUGE (SIGHT GLASS)	300	100	NA
N7	FLG-600	MANWAY	1000	150	NA
N8	FLG-600	MANWAY	NA	150	950
N9	FLG-50	DRAIN	100	100	NA
N10	FLG-25	RECIRCULATION	NA	100	1250
N11	FLG-75	HEATER INSERTION	300	150	NA
N12	FLG-75	TEMPERATURE TRANSMIT'R	300	150	NA

ACCESSORIES

Level Indicator	X	Handrails On Lid	·
Ladder ☐ Int ☐ Ext	·	Baffles	·
Stairs	·	Pipe Supports for Interior Piping	X
Walkway	·	Pipe Supports for Exterior Piping	X
Platform Clips	·	Lateral Restraint	·
Anchor Lugs	X	Tie Down System	·
Syphon Drain	X	Heat Trace	·
Sump	·	Insulate	X
Vortex Breaker	·	Spectacle Blinds for N1,N2,N3,	X
Inlet Baffle	·	N4 and N10	·
Lifting Lugs	X		·
Thief Hatch	·		·
Access Manway	X		·
Down Comer ☒ Int ☐ Ext	X		·
Heater	X		·
Pressure Vacuum Valve	·		·

NOTES:

1. SEE SPECIFICATIONS FOR ADDITIONAL INFORMATION.
2. EXTEND FILL LINE (N1) TO 300mm FROM TANK BOTTOM. PROVIDE LATERAL SUPPORTS. PROVIDE 6mm PERFORATIONS EVERY 150mm ALONG LENGTH OF FILL LINE TO PREVENT BACK SIPHON.
3. PROVIDE BLIND FLANGE AND GASKETS FOR NOZZLE (N5).
4. ALL NOZZLES EXCEPT (N7, N8) SHALL BE CONICAL GUSSETED.
5. ACTUAL NUMBER AND LOCATION OF ANCHOR LUGS TO BE DETERMINED BY MANUFACTURER.
6. Elev = ELEVATION FROM TANK BOTTOM IN mm.
   Proj = PROJECTION DISTANCE IN mm.
   Rad CL = RADIAL CENTRE LINE IN mm.

CH2MHILL®

CH2MHILL®

TANK DATA SHEET
(NOT TO SCALE)

Tag No.:	TK-C301	x	1
Project:	WINNIPEG	x	474248

SODIUM BISULPHITE TANK

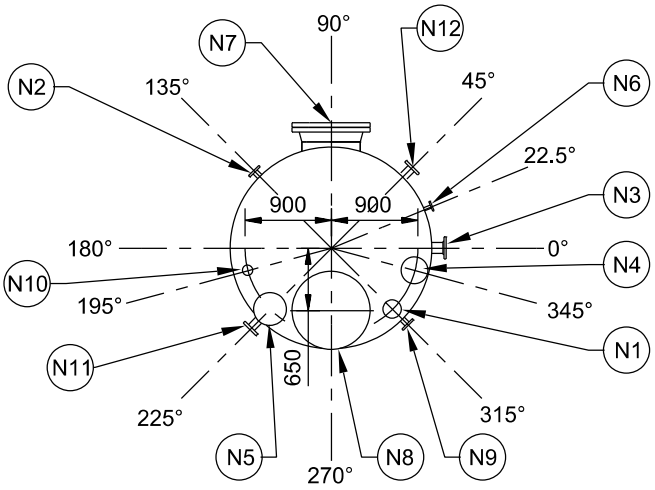

PLAN
NTS

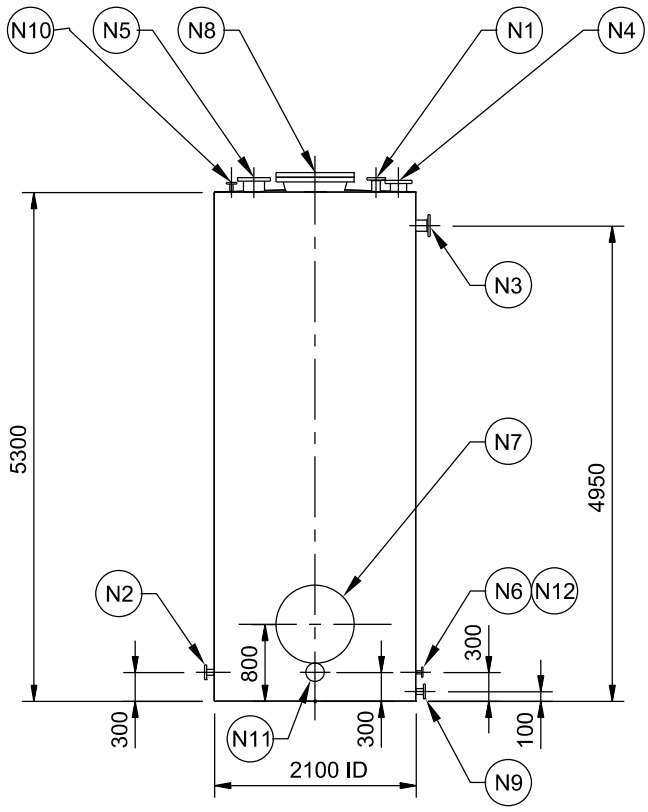

ELEVATION
NTS

GENERAL INFORMATION

SERVICE:	SODIUM BISULPHITE		No. Reqd 1
Capacity	17,000 L	Thickness	-
Design code	ASME-RTP-1	Roof	FLAT
Material	FRP	Shell	VERTICAL CYLINDER
Temperature	-50 - 50 °C	Bottom	FLAT

COATING	EXTERNAL	INTERNAL
Surface Prep	AS SPECIFIED	AS SPECIFIED
Primer	AS SPECIFIED	AS SPECIFIED
Finish Coat	AS SPECIFIED	AS SPECIFIED
Insulation Thk	AS SPECIFIED	AS SPECIFIED
Material	AS SPECIFIED	AS SPECIFIED
Cladding	AS SPECIFIED	AS SPECIFIED

NOZZLE SCHEDULE

MK	Size/Type	Service	Elev	Proj	Rad CL
N1	FLG-75	FILL	NA	150	900
N2	FLG-50	OUTLET	300	100	NA
N3	FLG-100	OVERFLOW	4950	150	NA
N4	FLG-150	VENT	NA	150	900
N5	FLG-100	LEVEL TRANSMITTER (ULTRASONIC)	NA	150	900
N6	FLG-25	LEVEL GAUGE (SIGHT GLASS)	300	100	NA
N7	FLG-600	MANWAY	800	150	NA
N8	FLG-600	MANWAY	NA	150	650
N9	FLG-50	DRAIN	100	100	NA
N10	FLG-25	RECIRCULATION	NA	100	900
N11	FLG-75	HEATER INSERTION	300	150	NA
N12	FLG-75	TEMPERATURE TRANSMIT'R	300	150	NA

ACCESSORIES

Level Indicator	X	Handrails On Lid	
Ladder ☐ Int ☐ Ext		Baffles	
Stairs		Pipe Supports for Interior Piping	X
Walkway		Pipe Supports for Exterior Piping	X
Platform Clips		Lateral Restraint	
Anchor Lugs	X	Tie Down System	
Syphon Drain	X	Heat Trace	
Sump		Insulate	X
Vortex Breaker		Spectacle Blinds for N1,N2,N3,	X
Inlet Baffle		N4 and N10	
Lifting Lugs	X		
Thief Hatch			
Access Manway	X		
Down Comer ☒ Int ☐ Ext	X		
Heater	X		
Pressure Vacuum Valve			

NOTES:

1. SEE SPECIFICATIONS FOR ADDITIONAL INFORMATION.
2. EXTEND FILL LINE (N1) TO 300mm FROM TANK BOTTOM. PROVIDE LATERAL SUPPORTS. PROVIDE 6mm PERFORATIONS EVERY 150mm ALONG LENGTH OF FILL LINE TO PREVENT BACK SIPHON.
3. PROVIDE BLIND FLANGE AND GASKETS FOR NOZZLE (N5).
4. ALL NOZZLES EXCEPT (N7, N8) SHALL BE CONICAL GUSSETED.
5. ACTUAL NUMBER AND LOCATION OF ANCHOR LUGS TO BE DETERMINED BY MANUFACTURER.
6. Elev = ELEVATION FROM TANK BOTTOM IN mm.
   Proj = PROJECTION DISTANCE IN mm.
   Rad CL = RADIAL CENTRE LINE IN mm.

CH2MHILL®

SECTION 43 40 02.13

UNDERGROUND DOUBLE WALL FRP TANK

PART 1 GENERAL

1.1 RELATED SECTIONS

A. Section 01 43 33, Contractor Field Services.

B. Section 01 91 14, Equipment Testing and Facility Startup.

1.2 WORK OF THIS SECTION

A. The Work of this Section includes furnishing and installation of an underground, double wall Fiberglass Reinforced Plastic (FRP) tank with anchoring, level and leakage monitoring systems and other appurtenances indicated herein.

B. Unit Responsibility: The Work requires that the FRP tank, complete with anchoring, level and leakage monitoring systems and all appurtenances be the end product of one responsible system supplier. The Contractor is responsible to the City for providing the equipment system as specified herein.

C. General Requirements: See Division 1, General Requirements, which contains information and requirements that apply to the work specified herein and are mandatory for this project, including but not limited to Codes and Standards.

1.3 REFERENCES

A. The following is a list of standards which may be referenced in this section:
   1. CAN/CGSB-41.22-93: Fiberglass-Reinforced Plastic Corrosion-Resistant Equipment.
   2. American National Standards Institute (ANSI): B16.5, Pipe Flanges and Flanged Fittings.
   3. Underwriters' Laboratories of Canada (ULC): ULC-S615-98, Standard for Reinforced Plastics Underground Storage Tanks for Petroleum Products.

1.4 DEFINITIONS

A. FRP: Fiberglass Reinforced Plastic.

1.5 SUBMITTALS

A. Shop Drawings:
   1. Fabricators catalog information, descriptive literature, specifications, identification of materials of construction and complete resin system information.
   2. Detailed fabrication drawings.
   3. Complete design calculations for tank including assumptions and safety factors used.
   4. Tank data indicating equipment number, pressure rating, diameter, straight shell lengths, overall lengths, wall thickness, corrosion barrier thickness, and details of nozzle designs.

5. Tank capacity chart indicating litres for each centimeter of depth and cumulative total from bottom.
6. Fabricator's detailed requirements for tank foundations.
7. Detail design of anchoring system including number of straps, attachment points, overall length and maximum load carrying capacity and installation instructions.
8. Detail drawings of level and leakage monitoring system including catalog information, wiring diagrams and installation instructions.

B. Quality Control Submittals:
1. Fabricator's Certificate of Compliance with fabrication requirements.
2. Qualifications of Fabricator's Quality Assurance Supervisor.
3. Copy of the fabricator's Quality Assurance Program.
4. Quality Assurance Inspection:
   a. Initial QA Inspection Report.
   b. Certification of Factory Testing.

C. Special shipping, storage and protection, and handling instructions.

D. Fabricator's written/printed installation and tank support instructions.

E. Manufacturer's Certificate of Proper Installation in accordance with Section 01 43 33, Contractor Field Services.

1.6 QUALITY ASSURANCE

A. Fabricator's Quality Assurance Supervisor: Minimum of 5 years' experience in the fabrication of fiberglass structures.

B. Designer: Registered Professional Engineer licensed in the Province of Manitoba.

1.7 DELIVERY, STORAGE, AND HANDLING

A. In accordance with manufacturer’s recommendations.

1.8 SEQUENCING AND SCHEDULING

A. Tanks shall not be shipped from factory until Contract Administrator's review of Certification of Factory Testing is completed.

PART 2 PRODUCTS

2.1 TANK SERVICE CONDITIONS

A. Underground, approximately 6 meters below grade.

B. Store chemicals leakages during truck fill and small spills in various spill containment areas in the Chemical and Electrical Building. Tank will be pre-filled with 4000 L water to act as a dilution media.

C. Operating Pressure: Atmospheric.

D. Contents: approximately 99 percent water, 1 percent of any of the following liquid chemicals: sodium hypochlorite (12 percent concentration), sodium hydroxide (50 percent concentration), sodium bisulphite (38 percent concentration), ferric chloride (40 percent concentration) and cationic polymers.

2.2 TANK DESIGN REQUIREMENTS

A. Tank capacity: 10,000 L.

B. Approximate depth of burial: 6 meters

C. Design tank, including resin selection, wall thickness, corrosion liner, methods and locations of anchors, and integrally moulded ribs for reinforcement of tank walls against pressures due to soil and high water table. Design shall be prepared and sealed by designer meeting requirements of Article Quality Assurance.

D. Tank shall be double wall construction suitable for underground installation of approximately 6 meters depth from grade. The primary and secondary containment shall be a load sharing sandwich structure with an interstitial space to allow for free flow and containment of leaked product from the primary tank. The space shall allow the insertion of a dry annular space monitoring device through a monitoring fitting.

E. Tank materials shall be such that they shall not break collapse or corrode due to the exposure to ambient soil, water or the designated contents of tank as stated in section 2.1.

F. Design Loads: tank shall withstand external loads due to soil and water table with a minimum 3:1 safety factor against failure and without deflection beyond manufacturer's recommended limits. Consider loading with tank empty of all liquid and external water level at surface of backfill.

2.3 TANK ANCHORING SYSTEM

A. Design shall be prepared and sealed by designer meeting requirements of Article Quality Assurance.

B. Anchoring system shall withstand continuously the uplift forces caused by ground water pressure when tank is empty and external water level at surface of backfill (severe loading condition). Each component of anchoring system shall have a minimum factor of safety of 1.2:1 against failure under the most severe loading condition.

C. Anchors shall be constructed from 30MPa minimum strength, S-3 concrete, reinforced internally with steel epoxy coated reinforcing bar.

2.4 TANK APPURTENANCES

A. Access Manway: Provide one (1) man-way, one (1) FRP man-way extension with suitable length to grade.

B. Fittings: Provide two (2) 150mm flange half couplings and riser assembly for vent and pump out, five (5) 100mm flange half couplings and riser assembly for fills, level sensor and leak sensor, one (1) 100mm flange half coupling and riser assembly for water fill and one (1) 100mm flange half coupling and riser assembly for spare. Riser assembly shall be shall be galvanized steel, wrapped with denso tape for corrosion protection for pump out. Other riser assemblies shall be PVC Schedule 80.

C. Tank Level Monitoring System: Provide a liquid level monitoring system including control panel suitable for tank service conditions listed in section 2.1 to be field installed.

D. Tank Level Transmitter: Provide a liquid level transmitter suitable for tank service conditions listed in section 2.1 to be field installed. Transmitter to be a loop powered 4-20 mA device for connection to the Plant Control System.

E. Tank Level Switch: Provide a liquid level switch suitable for tank service conditions listed in section 2.1 to be field installed. Provide a fail-safe dry contact to indicate a high level for use by the Plant Control System.

F. Leak Switch: Provide a dry annular space monitoring system including control panel to be field installed. Leak Monitoring System shall comply with relevant environmental regulations. Provide a fail-safe dry contact to indicate a leak alarm for use by the Plant Control System.

G. Lifting Lugs: Provide suitably attached for tank weighing over 45 kgs.

H. Anchoring System: Provide pre-cast reinforced concrete components, complete with appropriate number of straps and turnbuckles as recommend by manufacturer.

2.5 TANK MANUFACTURER

A. ZCL Composites Inc.

B. Or approved equal in accordance with B8.

2.6 SOURCE QUALITY CONTROL

A. Factory Test Reports: Certify the results, by signature, of the following:
   1. Inspections.
   2. Results of hydrostatic and leakage testing.
   3. Test Reports of physical properties of standard laminates.

PART 3 EXECUTION

3.1 INSTALLATION

A. In accordance with the manufacturer's written instructions.

B. Contractor shall provide all supervision, labor, tools, construction equipment, incidental materials, and the necessary services required to complete the installation and testing of the equipment.

3.2 FIELD QUALITY CONTROL

A. Tank pre-installation test: Test tank prior to installation per manufacturer’s instructions. These tests include but not limited to the following:
   1. Detailed visual inspection of the tank’s exterior.
   2. Air soap/leak test.
   3. Pressure test.

B. Tank post-installation test: Tank to be leak tested per manufacturer’s instructions and recommendations.

3.3 MANUFACTURER'S FIELD SERVICES

A. Provide Manufacturer's Representative at Site in accordance with Section 01 43 33, Contractor Field Services, and 01 91 14, Equipment Testing and Facility Startup for installation assistance, inspection and certification of proper installation for specified component, subsystem, equipment, or system.

END OF SECTION

SECTION 43 40 03

PROCESS ELECTRIC WATER HEATER

EQUIPMENT AND COMPONENT NUMBERS

ID No.	Equipment Description
TK-G504	Hot Water Heater

PART 1 GENERAL

1.1 REFERENCES

A. The following is a list of standards which may be referenced in this section:
   1. American Society of Mechanical Engineers (ASME):
      a. Boiler and Pressure Vessel Code (BPVC):
         1) Section I, Rules for Construction of Power Boilers.
         2) Section IV, Rules for Construction of Heating Boilers.
         3) Section VIII, Rules for Construction of Pressure Vessels.
   2. National Electrical Manufacturer's Association (NEMA): 250, Enclosures for Electrical Equipment (1,000 Volts Maximum).
   3. 2010 National Building Code of Canada, with 2011 Manitoba Amendments (NBC).

1.2 SUBMITTALS

A. Shop Drawings:
   1. Make, model, weight, and rated power of each equipment assembly.
   2. General arrangement drawings including dimensions, size and location of connections to other work, and anchorage requirements.
   3. Manufacturer's catalog information, descriptive literature, specifications, and identification of materials of construction.
   4. External utility requirements such as air, water, power, drain, etc., for each component.
   5. Functional description of internal and external instrumentation and controls to be supplied including list of parameters monitored, controlled, or alarmed.
   6. Control panel drawings showing construction, dimensions, placement of operator interface devices, internal layout, and external interfaces.
   7. Power and control wiring diagrams, including terminal numbers.
   8. Description of sequence of operation including interlocks and alarms.

B. Quality Control Submittals:
   1. Special shipping, storage and protection, and handling instructions.
   2. Manufacturer's printed installation instructions.
   3. Routine maintenance requirements prior to system startup.
   4. Manufacturer's Certificate of Proper Installation in accordance with Section 01 43 33, Contractor Field Services.
   5. Functional and Performance Test Reports.

6. Operation and Maintenance Data: As specified in Section 01 78 23, Operation and Maintenance Data.
7. Submit written certification from Professional Engineer licensed in Province of Manitoba stating that support systems, anchorage, and equipment have been designed according to requirements of NBC for post-disaster structures, at time of Shop Drawing submittals.

1.3 EXTRA MATERIALS

A. Furnish, tag, and box for shipment and storage the following spare parts and special tools:

Item	Quantity
Safety relief valve	One
Special tools required to maintain or dismantle equipment	One complete set

B. Delivery: In accordance with Section 01 61 00, Common Product Requirements.

PART 2 PRODUCTS

2.1 GENERAL

A. Design equipment, anchorage, and support systems for vertical and lateral loading in accordance with NBC.

2.2 MANUFACTURERS

A. Materials, equipment, and accessories specified in this section shall be products of:
1. Hubbell Water Heaters; Model SH.
2. Precision Boilers; Model HWS.

2.3 CONDITIONS OF SERVICE

A. Equipment shall be suitable for the following conditions of service:

	TK-G504	
Fluid Handled	Plant effluent	
Temperature (degrees C)	5 - 25	
Specific Gravity	1.0	
pH	6 - 8	
Suspended Solids (mg/L)	2 - 30	
Maximum Particle Size (microns)	150	
Inlet Pressure (kPa)	500 - 700	

2.4 DESIGN REQUIREMENTS

A. Equipment shall be designed for the following requirements:

	TK-G504	
Actual Storage Capacity (L)	1,900	
Heater Input Capacity (kW)	15	
Recovery Rating at 56 degrees C Temperature Rise (L/hr)	235	
Outlet Temperature (degrees C)	50	
Tank Orientation	Vertical	
Water Inlet/Outlet Connection Size (mm NPT)	50	
Tank Diameter (mm)	1,220	
Power Supply (voltage/phase/Hz)	600/3/60	

2.5 EQUIPMENT DESCRIPTION

A. Packaged electric hot water heater, factor pre-assembled and wired, generally consisting of insulated steel storage tank, electric heating element, supports, control panel, and other appurtenances required for a complete operating system.

B. Storage Tank:
   1. Pressure vessel fabricated from carbon steel, all-welded construction, conforming to ASME BPVC Section IV, with maximum working pressure rating of 862 kPag.
   2. Interior Lining: Cement mortar, seamless, minimum 16 mm thick, covering all interior surfaces of tank, Hydrastone or approved equal in accordance with B8.
   3. Exterior Insulation: Fiberglass blanket, minimum 50 mm thick, covering all exterior surfaces of tank.
   4. Tank Enclosure: Heavy gauge galvanized steel protective jacket.
   5. Safety Relief Valve: Combination temperature and pressure relief valve, bronze body, ASME approved, automatic reseating type.
   6. NPT connections for inlet, outlet, and valved drain.
   7. Access Opening: Minimum 300 mm by 400 mm.
   8. Support Base: Fabricated from structural steel and suitable for floor mounting.

C. Heating Element:
   1. Heavy duty, immersion type, Incoloy-sheathed copper.
   2. Flanged connection to facilitate removal for servicing or replacement.
   3. Suitable for 600V, 3 phase, 60 Hz power supply.

D. Instruments: Dial type temperature and pressure gauges, factory installed on tank.

2.6 CONTROLS

A. Controls: In accordance with general control requirements and component qualities specified in Section 40 99 90, Package Control Systems.

B. Provide all necessary devices including thermostats, relays, contacts, switches, indicating lights, transformers, fuses, and terminal blocks as required to implement the control functions specified.

C. Control Panel:

1. Type 304 stainless steel NEMA 4 enclosure.
2. Equipment-mounted, CSA approved, with hinged and lockable front cover and removable backplate.
3. Control power transformer.
4. Main power disconnect switch interlocked with panel door.
5. Push-to-test type indicating lights.
6. Lamacoid nameplates for identification of panel, operator controls, and indicators.
7. All operator controls and indicators externally mounted on panel door.
8. Adequately sized to house all components with sufficient access for maintenance.
9. Pre-wired and factory tested.
10. Operator Controls and Indicators:
    a. POWER ON/OFF selector switch.
    b. POWER ON indicating light.
    c. HIGH TEMPERATURE alarm light.
    d. LOW WATER alarm light.
11. External Interfaces: Provide discrete maintained dry contact outputs, rated 5A at 120V ac, for remote indication of the following:
    a. General FAULT.
12. Functional Requirements:
    a. Adjustable thermostat shall maintain specified water temperature.
    b. High temperature cutout device with manual reset shall interrupt power to control circuit in event of water over-temperature.
    c. Low water cutout device shall disengage power to heating element in event of low water level in tank.
    d. Fused overload circuits shall interrupt power in event of overload condition.

2.7 APPURTENANCES

A. Lifting Lugs: Provide suitably attached for all equipment assemblies and components weighing over 45 kg.

B. Equipment Identification Plates: In accordance with Section 40 05 53, Identification Labels for Equipment, Fabricated Tanks, Valves and Piping Systems.

2.8 FACTORY FINISHING

A. Prepare, prime, and finish coat in accordance with manufacturer’s standard coating system.

2.9 SOURCE QUALITY CONTROL

A. Factory Functional Test: Perform manufacturer's standard production tests.

PART 3 EXECUTION

3.1 EQUIPMENT INSTALLATION

A. Install in accordance with manufacturer's printed instructions.

3.2 FIELD QUALITY CONTROL

A. Functional Test:
   1. Conduct on each unit.
   2. Test for continuous 3-hour period.

3.3 MANUFACTURER'S SERVICES

A. Manufacturer's Representative: Present at Site or classroom designated by the City, for minimum person-days listed below, travel time excluded:
   1. One person-day for installation assistance and inspection.
   2. One person-day for functional and performance testing and completion of Manufacturer's Certificate of Proper Installation.
   3. One person-day for pre-startup classroom or Site training.
   4. One person-day for facility startup.
   5. One person-day for post-startup training of the City's personnel. Training shall not commence until an accepted detailed lesson plan for each training activity has been reviewed by the City and Contract Administrator.

B. See Section 01 43 33, Contractor Field Services and Section 01 91 14, Equipment Testing and Facility Startup.

END OF SECTION