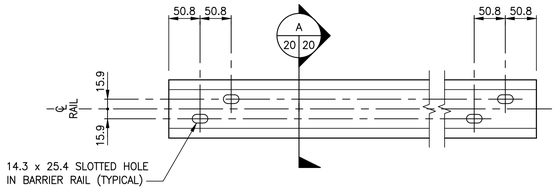

BARRIER RAIL DETAIL

SCALE 1:5

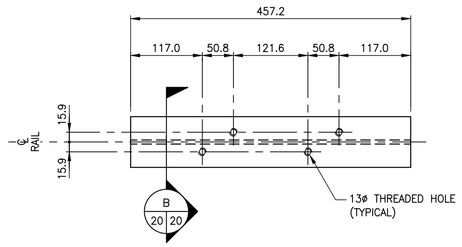

SPLICE BAR DETAIL

SCALE 1:5

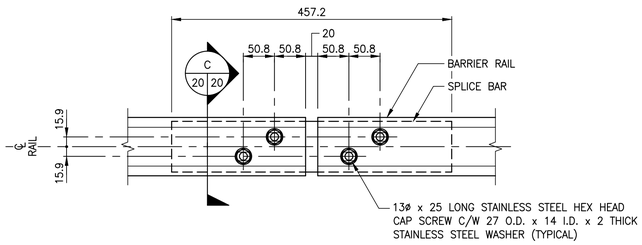

SPLICE BAR TO BARRIER RAIL ASSEMBLY DETAIL

SCALE 1:5

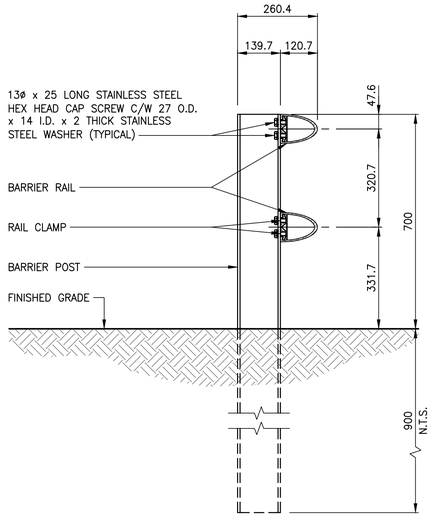

SECTION A

SCALE 1:10 (19 20)

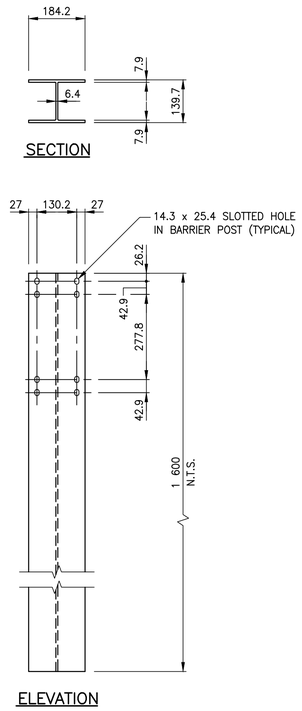

1 600 mm POST DETAIL

SCALE 1:10

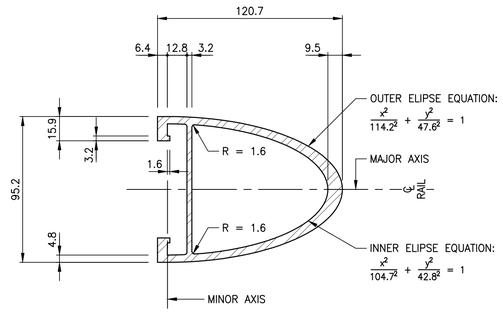

SECTION A

SCALE 1:2 (20 20)

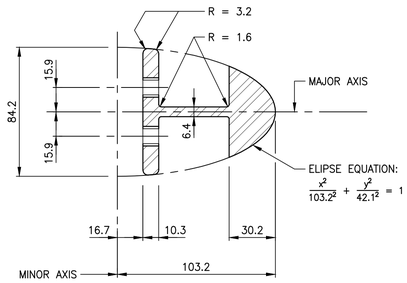

SECTION B

SCALE 1:2 (20 20)

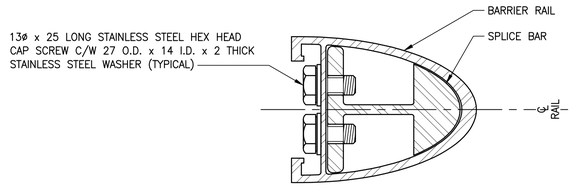

SECTION C

SCALE 1:2 (20 20)

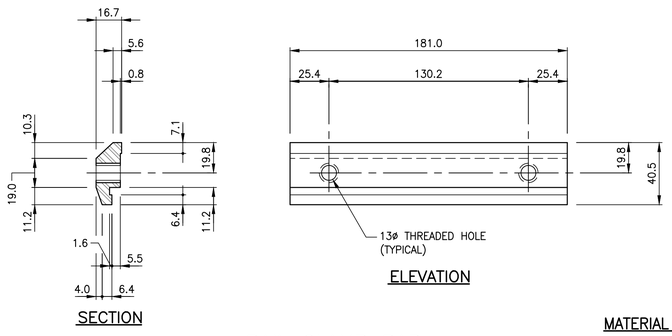

RAIL CLAMP BAR

SCALE 1:2

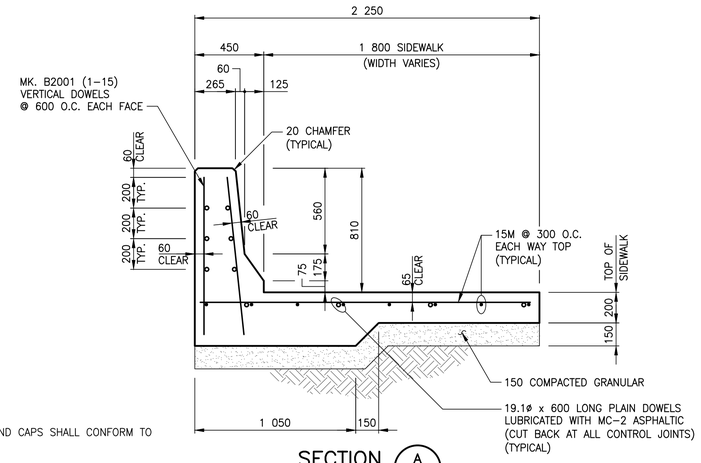

SECTION A

SCALE 1:20 (19 20)

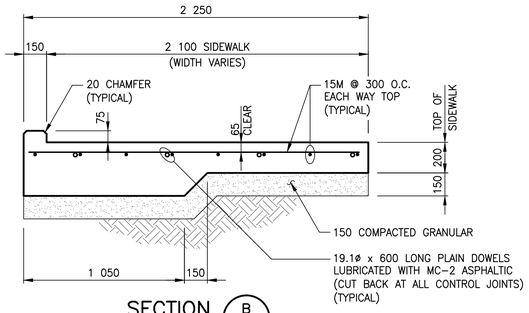

SECTION B

SCALE 1:20 (19 20)

MATERIAL SPECIFICATIONS

1. ALUMINUM RAILS, POSTS, SPLICE BARS, CLAMP BARS, AND END CAPS SHALL CONFORM TO ASTM B221, ALLOY 6061–T6, OR ALLOY 6351–T6.
2. STAINLESS STEEL WASHERS SHALL CONFORM TO ASTM A296.
3. CAP SCREWS SHALL CONFORM TO ASTM A276, TYPE 430 STAINLESS STEEL.
4. ANTI–SEIZE COATING TO BE APPLIED TO ALL THREADED COMPONENTS WHEN BEING ASSEMBLED [I.E., LPS–3 MANUFACTURED BY HOLT LLOYD (CANADA) LTD. MARKHAM, ONTARIO L3R 2Z3].

METRIC

ALL MEASUREMENTS IN MILLIMETRES
UNLESS OTHERWISE STATED

NOTE:
These design documents are prepared solely for the use by the party with whom the design professional has entered into a contract and there are no representations of any kind made by the design professional to any party with whom the design professional has not entered into a contract.

ENGINEERS GEOSCIENTISTS MANITOBA
Certificate of Authorization
WSP Canada Group Limited
No. 6657

LOCATIONS APPROVED
UNDERGROUND STRUCTURES

SIGNED BY: _____ SUPV U/G STRUCTURES _____ DATE

LOCATION OF UNDERGROUND STRUCTURES AS SHOWN ARE BASED ON THE BEST INFORMATION AVAILABLE BUT NO GUARANTEE IS GIVEN THAT ALL EXISTING UTILITIES ARE SHOWN OR THAT THE GIVEN LOCATIONS ARE EXACT CONFIRMATION OF EXISTANCE AND EXACT LOCATION OF ALL SERVICES MUST BE OBTAINED FROM THE INDIVIDUAL UTILITIES BEFORE PROCEEDING

G.B.M. = TOP NUT OF FIRST HYDRANT SOUTH OF INTERSECTION BETWEEN NESS AVENUE AND LINWOOD STREET
ELEV. = 233.659

No.	REVISIONS	DATE	BY
0	ISSUED FOR TENDER	17.11.23	JL

WSP Canada Group Limited
93 Lombard Avenue, Suite 111
Winnipeg MB R3B 3B1
T+ 1 204-943-3178
F+ 1 204-943-4948
www.wsp.com

DESIGNED BY	MLW	CHECKED BY	WC
DRAWN BY	CP	APPROVED BY	JL
HOR. SCALE	AS NOTED	RELEASED FOR CONSTRUCTION	
VERTICAL	AS NOTED		
DATE	17.11.23	DATE	

ENGINEER'S SEAL
PROVINCE OF MANITOBA
M. L. WADELIUS
Member
23806
Nov 23/17
REGISTERED PROFESSIONAL ENGINEER

CONSULTANT PROJECT No.
17M-00806-00

Winnipeg
THE CITY OF WINNIPEG
PUBLIC WORKS DEPARTMENT
ENGINEERING DIVISION

TRURO CREEK CULVERT REPLACEMENT
AT WINCHESTER STREET

APPROACH BARRIER DETAILS
(SHEET 2 OF 2)

CITY DRAWING NUMBER: C322-17-20
BID OPPORTUNITY NUMBER: 1014-2017
SHEET 20 OF 25
REV 0

A1 SIZE (594 mm x 841 mm)

Plotted: November 24, 2017 at 10:22:36 AM | Last saved by: Petersonc
File: P:\2017\17M-00806-00 – Truro Creek Culvert Replacements\MMM Drawings\17M-00806-00 Truro Creek Culvert Replacements DD Winchester 19 20 approach barriers.dwg | Layout: 20 Approach Barrier Details (Sheet 2 of 2)