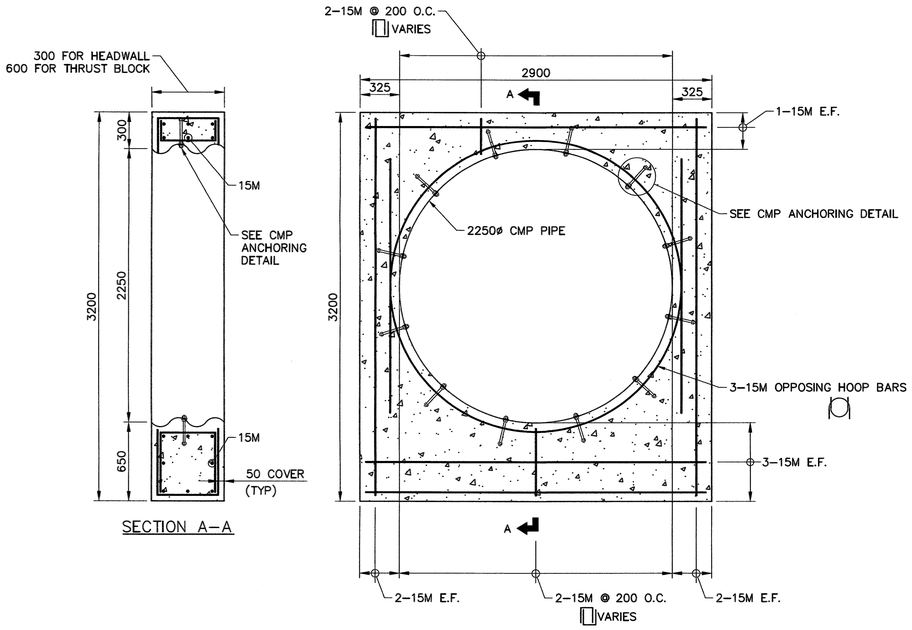


CONCRETE HEADWALL/THRUST BLOCK DETAIL
SCALE: 1:25

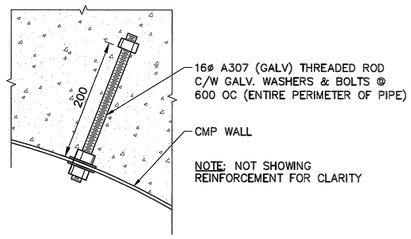


CMP ANCHORING DETAIL
SCALE: 1:5

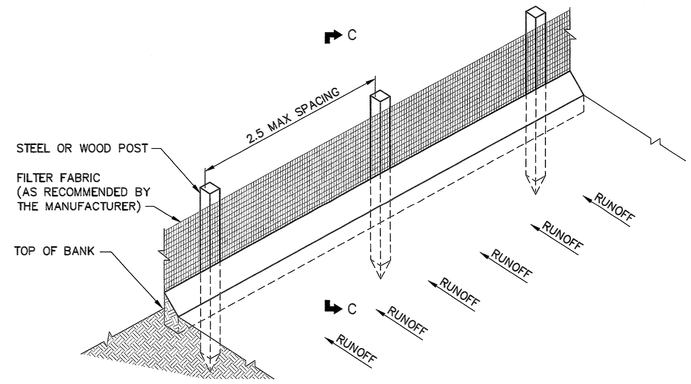


ISOMETRIC DETAIL

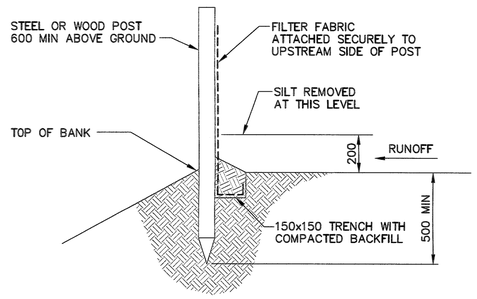


SECTION C–C

SILT FENCE DETAILS
SCALE: N.T.S.

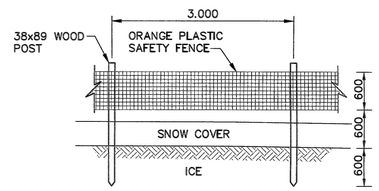


SAFETY FENCE DETAIL
SCALE: N.T.S.

METRIC
WHOLE NUMBERS INDICATE MILLIMETRES
DECIMALIZED NUMBERS INDICATE METRES

LOCATION APPROVED
UNDERGROUND STRUCTURES

SUPV. U/G STRUCTURES COMMITTEE — DATE

NOTE:

LOCATION OF UNDERGROUND STRUCTURES AS SHOWN ARE BASED ON THE BEST INFORMATION AVAILABLE BUT NO GUARANTEE IS GIVEN THAT ALL EXISTING UTILITIES ARE SHOWN OR THAT THE GIVEN LOCATIONS ARE EXACT. CONFIRMATION OF EXISTENCE AND EXACT LOCATION OF ALL SERVICES MUST BE OBTAINED FROM THE INDIVIDUAL UTILITIES BEFORE PROCEEDING WITH CONSTRUCTION.

B.M.
ELEV.

| NO. | REVISIONS | DATE | BY |
|---|---|---|---|
| 0 | ISSUED FOR CONSTRUCTION | 2017 12 05 | RBO |

APEGM
Certificate of Authorization
KGS Group
No. 245

KGS GROUP CONSULTING ENGINEERS

| | | | |
|---|---|---|---|
| DESIGNED BY | NGV | CHECKED BY | RBO |
| DRAWN BY | GEL | APPROVED BY | RBO |
| SCALE: HORIZONTAL | AS NOTED | RELEASED FOR CONSTRUCTION | |
| VERTICAL | NA | | |
| DATE | 2017 12 04 | DATE | Dec 4/17 |

ENGINEER'S SEAL
PROVINCE OF MANITOBA
R.B. OFFMAN
Member
24701
REGISTERED PROFESSIONAL ENGINEER

CONSULTANT DRAWING NUMBER
17–0107–020_LD–8466

Winnipeg
THE CITY OF WINNIPEG
WATER AND WASTE DEPARTMENT
ENGINEERING DIVISION

2018 OUTFALL RENEWAL REHABILITATION PROGRAM

MISCELLANEOUS DETAILS
SHEET 2 OF 2

SHEET 12 OF 14
CITY DRAWING NUMBER
LD–8466

PLOT DATE: 2017 12 04
BID OPPORTUNITY: 1030–2017
FILE PATH: P:\Projects\2017\17–0107–020\Dwg\Mun\