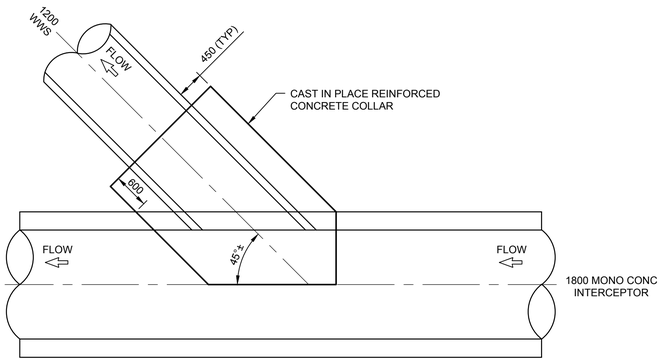

1200 CONNECTION TO INTERCEPTOR SEWER

0 1250 2500 mm
1:50

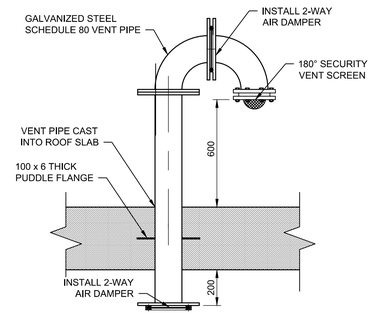

VENT PIPE DETAIL

0 250 500 mm
1:15

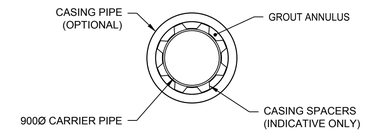

2 PASS CASING PIPE DETAIL

1:50

D SIZE 22" x 34" (559mm x 864mm)

PLOT: 2/6/2018 4:24:29 PM

AECOM FILE NAME: 60509089-SHT-30-0000-C-1006.dwg Saved By: cooperkl

AECOM REVIEW | DRFT CHK

METRIC
WHOLE NUMBERS INDICATE MILLIMETRES
DECIMALIZED NUMBERS INDICATE METRES

PRELIMINARY
NOT FOR CONSTRUCTION

BID OPPORTUNITY NO. 1136-2017B

LOCATION APPROVED
UNDERGROUND STRUCTURES

SUPR. U/G STRUCTURES COMMITTEE — DATE

NOTE:
LOCATION OF UNDERGROUND STRUCTURES AS SHOWN ARE BASED ON THE BEST INFORMATION AVAILABLE. BUT NO GUARANTEE IS GIVEN THAT ALL EXISTING UTILITIES ARE SHOWN OR THAT THE GIVEN LOCATIONS ARE EXACT. CONFIRMATION OF EXISTENCE AND EXACT LOCATION OF ALL SERVICES MUST BE OBTAINED FROM THE INDIVIDUAL UTILITIES BEFORE PROCEEDING WITH CONSTRUCTION.

NO.	REVISIONS	YY/MM/DD	BY
B	ISSUED FOR 50% REVIEW	18/02/05	KLC
A	ISSUED FOR 33% REVIEW	17/12/01	KLC

AECOM

DESIGNED BY	ADB	CHECKED BY	
DRAWN BY	ADL/KLC	APPROVED BY	
HOR. SCALE	AS NOTED	RELEASED FOR CONSTRUCTION	
VERT. SCALE	AS NOTED		
DATE		DATE	

PROFESSIONAL'S SEAL

CONSULTANT DRAWING NO.
60509089-SHT-30-0000-C-1006

Winnipeg

THE CITY OF WINNIPEG
WATER AND WASTE DEPARTMENT

NORTHEAST INTERCEPTOR SEWER
RIVER CROSSING

MISCELLANEOUS CIVIL DETAILS

SHEET 05 OF 09

CITY DRAWING NUMBER
11672

REV B