WO 101-84

FIELD	CONTROL PANEL CP-M801	
	FIELD TERMINALS	PLC SECTION
		BMX AMO 0410 RACK 0, SLOT 6

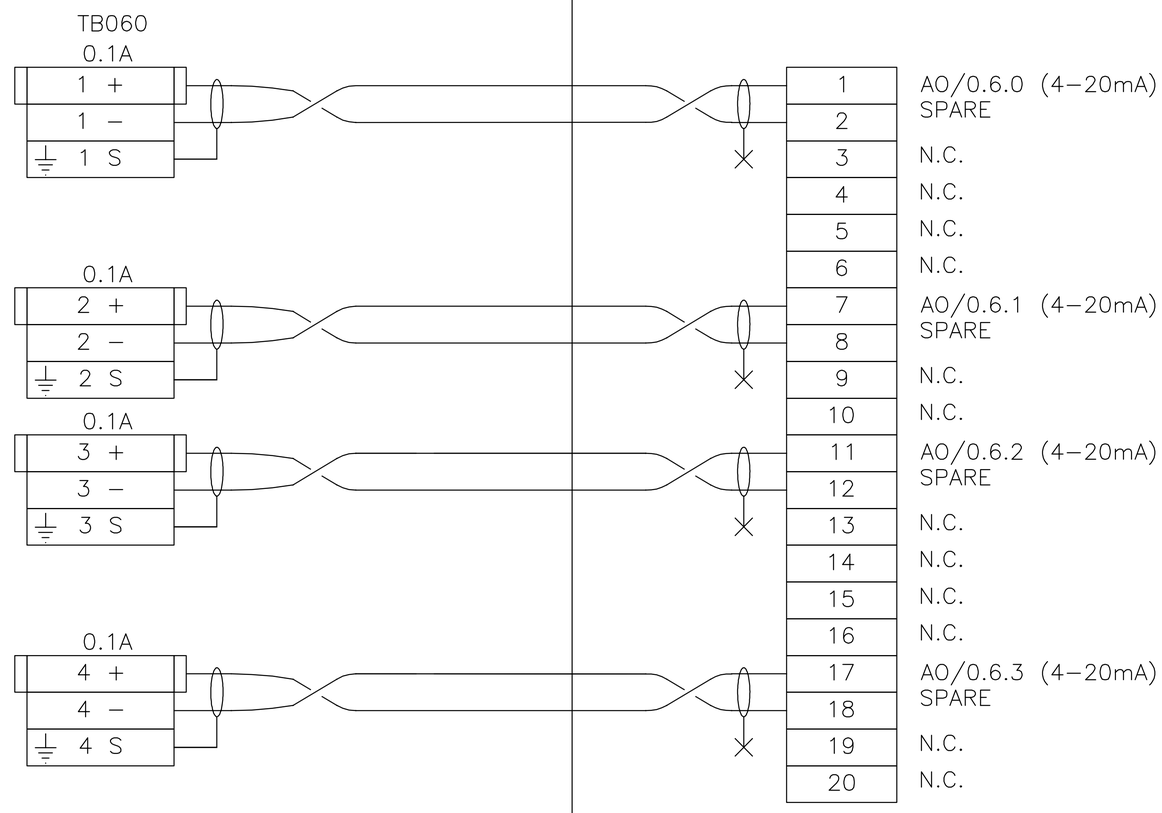

NO.	REVISIONS	DATE	BY
0	Issued for Tender	17/04/13	BLM

B.M.
ELEV.

DESIGNED BY BLM
DRAWN BY MS
CHECKED BY -
APPROVED BY -
HOR. SCALE
VERTICAL
DATE

DILLON CONSULTING

RELEASED FOR CONSTRUCTION
DATE

ENGINEER'S SEAL

CONSULTANT PROJECT NO.
163526

Winnipeg
THE CITY OF WINNIPEG
WATER AND WASTE DEPARTMENT

NORTH END SEWAGE TREATMENT PLANT
NEWPCC MAIN BUILDING - HVAC REPLACEMENT

CONTROL PANEL CP-M801
RACK 0, SLOT 6, WIRING DIAGRAM

CITY DRAWING NUMBER
1-0101M-A0048-001

SHEET 18 OF 21

IL-07

40DILLON ACAD FILE: C:\projectwise\working directory\active\40sk\d0397724\163526-01-IL.dwg 1/11/2007