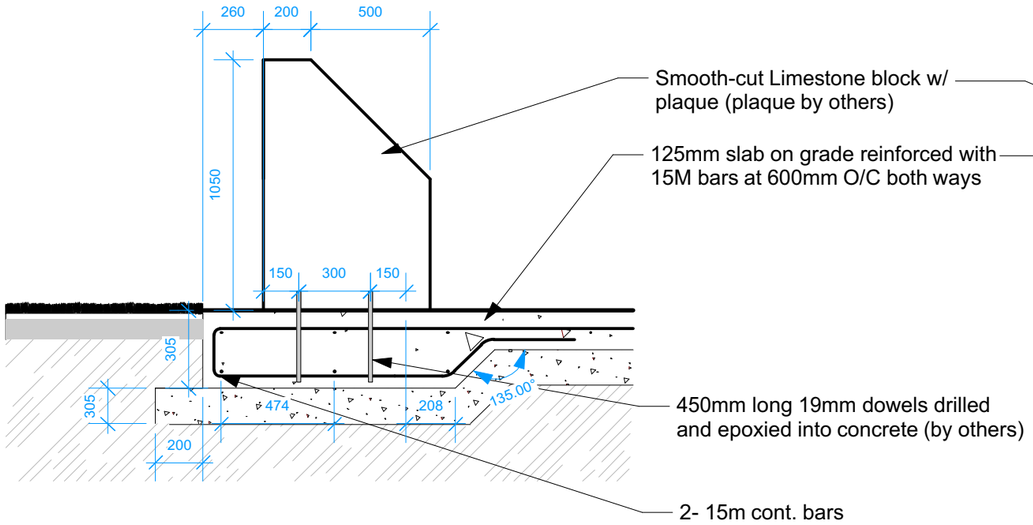

2 M.100-9 PLINTH ON THICKENED CONCRETE PAD (SECTION) 1:25

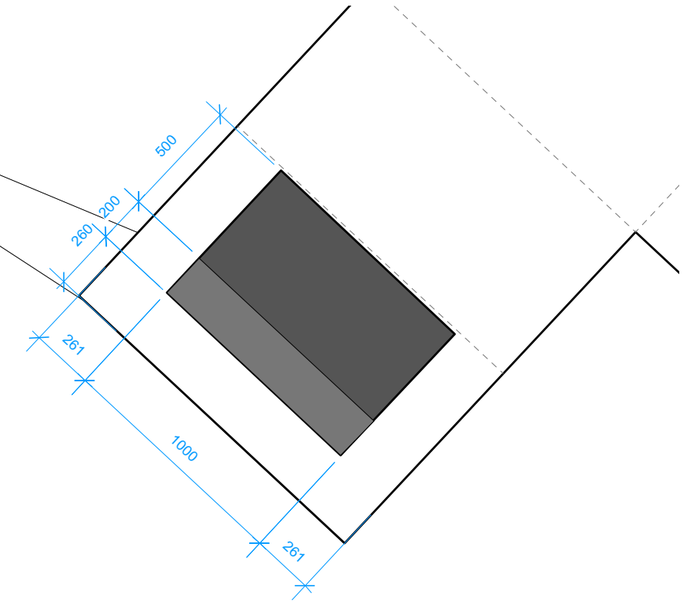

3 M.100-9 PLINTH ON THICKENED CONCRETE PAD (PLAN) 1:25

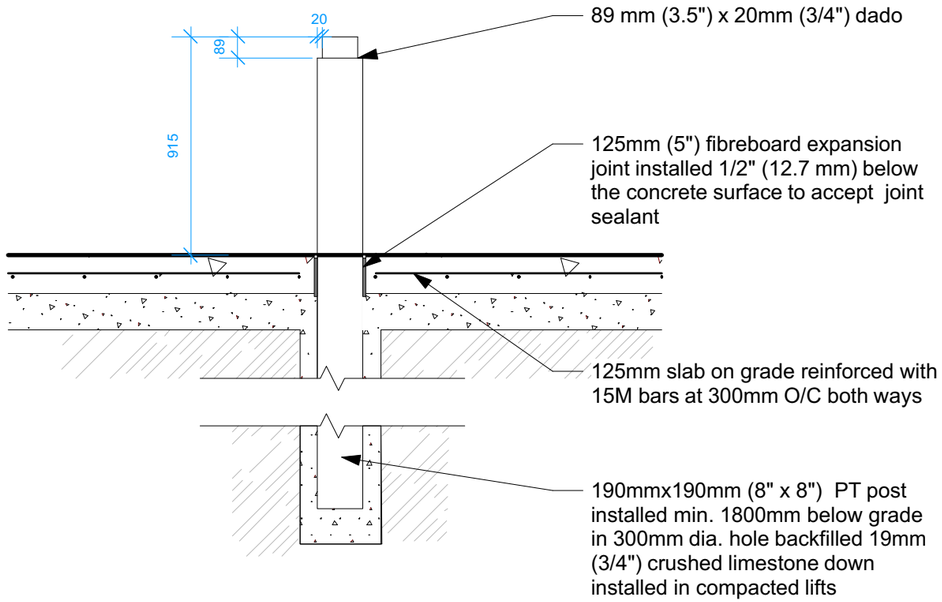

1 M.100-9 WOOD BOLLARD 1:25

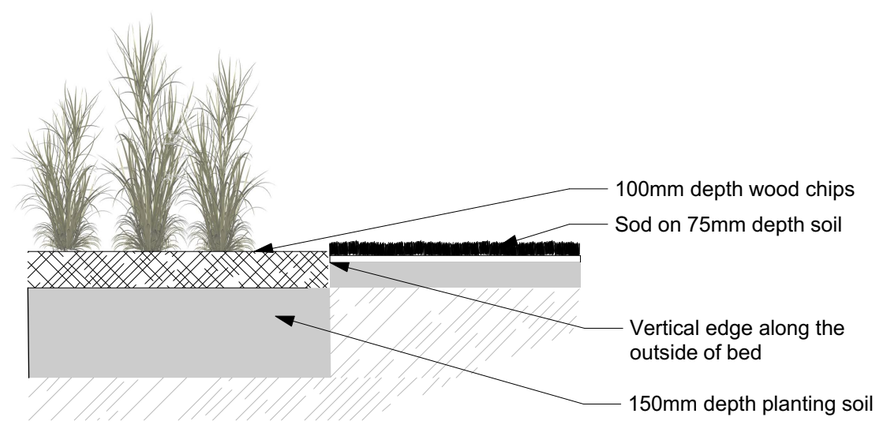

4 M.100-9 PERENNIAL BED AT SOD 1:20

THE CITY OF WINNIPEG
Planning, Property and Development Department
Urban Design Division
Unit 15 - 30 Fort Street,
Winnipeg, MB, (R3C 4X5)

Winnipeg

Notes:

1. All dimensions are in millimeteres (mm)

2. All wood to be pressure treated (GREEN)

3. All ends and cuts to be treated with clear-coat preservative

4. All hardware to be ACQ approved

5. Set posts vertical and plumb

6. 3040mm boards to be cut from 3650mm (12') boards.

DESIGNED BY	IL	CHECKED BY	
DRAWN BY	IM	APPROVED BY	
HORIZ. SCALE VERT. SCALE	AS INDICATED		
DATE	SEPTEMBER 2016		
MANAGER, PARK AND OPEN SPACES		DATE	
MANAGER, URBAN DESIGN DIVISION		DATE	

DRAWING TITLE
Magas Memorial Park Playground
Details

SITE ADDRESS 534 Regent Avenue East	DRAWING NO. M.100-9 BID OPPORTUNITY NO. 356-2017