A1 SIZE 594mm x 841mm

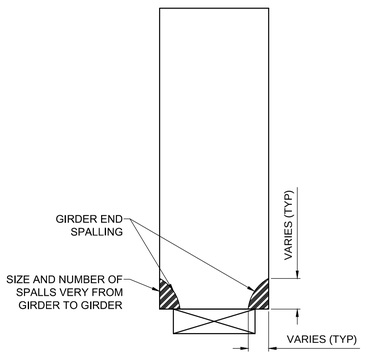

SECTION

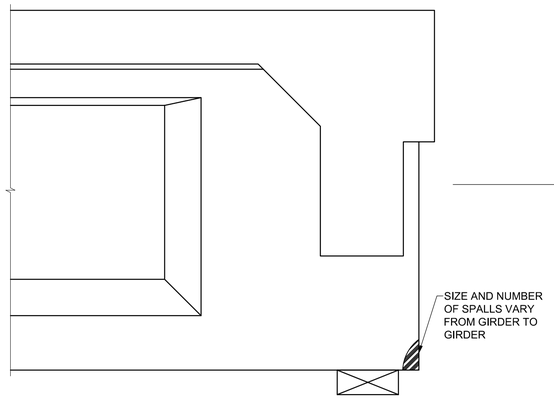

ELEVATION

TYPE 4 EXISTING CONDITIONS - TYPICAL GIRDER END AND SIDE COVER SPALLING

SCALE: 1:15

TYPICAL GIRDER SIDE AND END SPALL

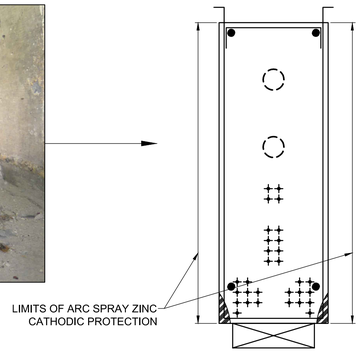

SECTION

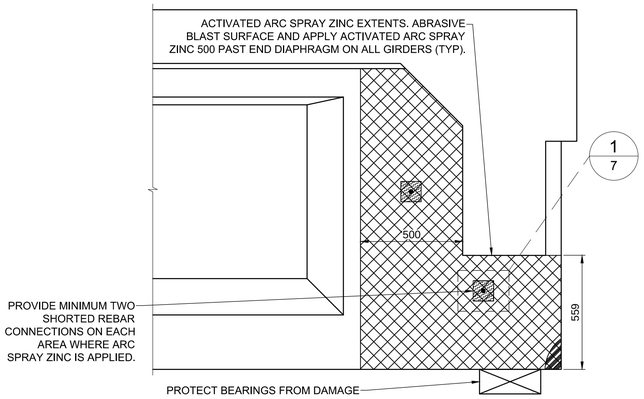

ELEVATION

TYPE 4 - PROPOSED TYPICAL GIRDER END AND SIDE COVER SPALLING WORK

SCALE: 1:15 46 GIRDER END FACES

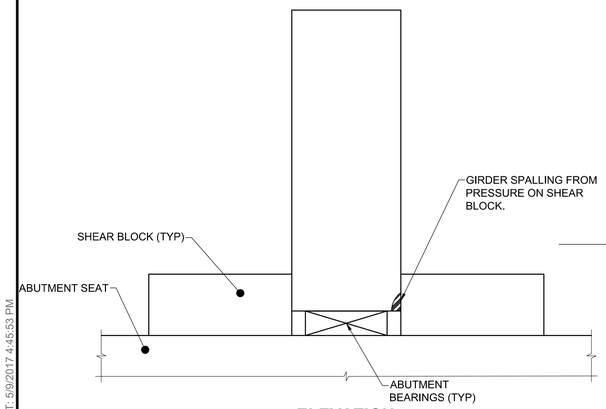

ELEVATION

TYPE 5 EXISTING CONDITIONS - TYPICAL GIRDER SPALLING AT SHEAR BLOCK

SCALE: 1:15

TYPICAL GIRDER SPALL AT SHEAR BLOCK

TYPICAL GIRDER SOFFIT DELATMINATIONS AT SHEAR BLOCK

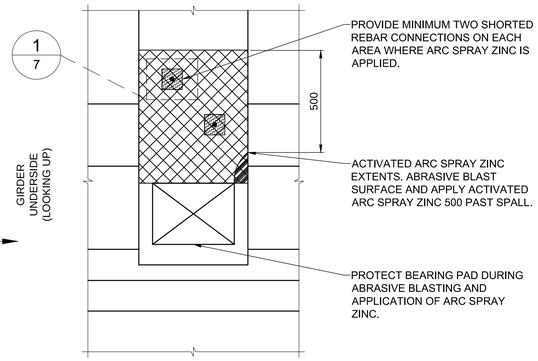

TYPE 5 - PROPOSED GIRDER SPALLING AT SHEAR BLOCK WORK

SCALE: 1:15 1 LOCATION

NOTE: MAINTENANCE WORKS ON GIRDER SOFFIT DELAMINATION SIMILAR. 1 LOCATION

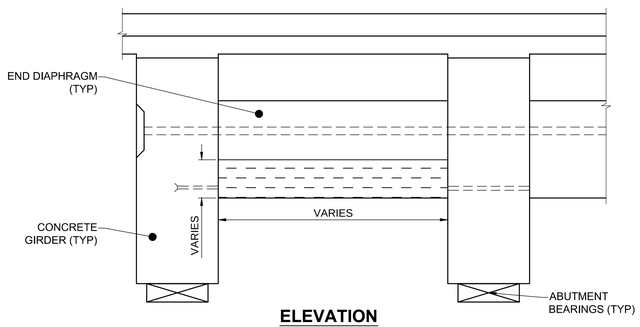

ELEVATION

TYPE 6 EXISTING CONDITIONS - TYPICAL END DIAPHRAGM DELAMINATION

SCALE: 1:20

TYPICAL END DIAPHRAGM DELAMINATION

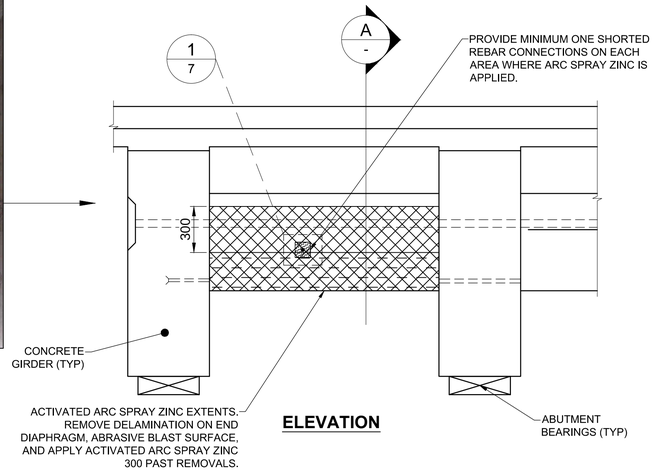

ELEVATION

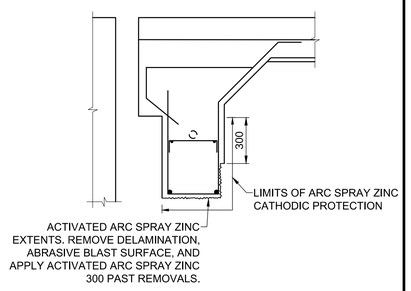

A / - **SECTION - END DIAPHRAGM**

SCALE: 1:20

TYPE 6 - PROPOSED TYPICAL END DIAPHRAGM DELAMINATION WORK

SCALE: 1:20 4 LOCATIONS

BID OPPORTUNITY No. 377-2017

DRAWING NOTE: SEE SHEET 03 FOR DETAILS OF END GIRDER AND END DIAPHRAGM REINFORCEMENT.

LEGEND
- DELAMINATION
- CONCRETE REPAIR
- SPALL
- ARC SPRAY ZINC EXTENTS

ENGINEERS GEOSCIENTISTS MANITOBA
Certificate of Authorization
MORRISON HERSHFIELD
No. 1736

METRIC
WHOLE NUMBERS INDICATE MILLIMETRES
DECIMALIZED NUMBERS INDICATE METRES

LOCATION APPROVED
UNDERGROUND STRUCTURES

SUPR. U/G STRUCTURES COMMITTEE DATE

NOTE:
LOCATION OF UNDERGROUND STRUCTURES AS SHOWN ARE BASED ON THE BEST INFORMATION AVAILABLE BUT NO GUARANTEE IS GIVEN THAT ALL EXISTING UTILITIES ARE SHOWN OR THAT THE GIVEN LOCATIONS ARE EXACT. CONFIRMATION OF EXISTENCE AND EXACT LOCATION OF ALL SERVICES MUST BE OBTAINED FROM THE INDIVIDUAL UTILITIES BEFORE PROCEEDING WITH CONSTRUCTION.

BM
ELEV

No.	REVISIONS	YY/MM/DD	BY
1	ISSUED FOR TENDER	17/05/12	DAN

MORRISON HERSHFIELD

DESIGNED BY	AGG	CHECKED BY	DAN
DRAWN BY	MS	APPROVED BY	BE
HOR SCALE	AS SHOWN	RELEASED FOR CONSTRUCTION	
VERT SCALE	AS SHOWN		
DATE		DATE	

PROFESSIONAL'S SEAL
PROVINCE OF MANITOBA
D.A. NEILSON
ORIGINAL SIGNED 17/05/12
37248
REGISTERED PROFESSIONAL ENGINEER

CONSULTANT FILE NAME
5160850 Bridge works details.dwg

Winnipeg
THE CITY OF WINNIPEG
PUBLIC WORKS DEPARTMENT
ENGINEERING DIVISION

MARYLAND TWIN BRIDGES
2017 MAINTENANCE WORKS

MAINTENANCE WORKS DETAILS II

CITY DRAWING NUMBER: B108-17-05
SHEET 05 OF 07
DRAWING No. 05 REV 1

PLOT: 5/9/2017 4:45:53 PM
FILE NAME: 5160850 Bridge works details.dwg Saved By: aglarski