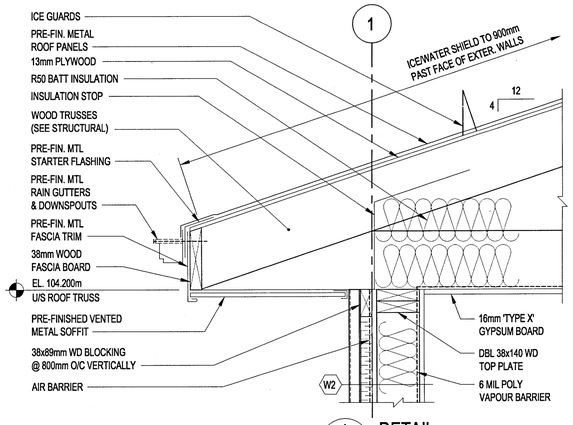

1 / - DETAIL
SCALE: 1:10

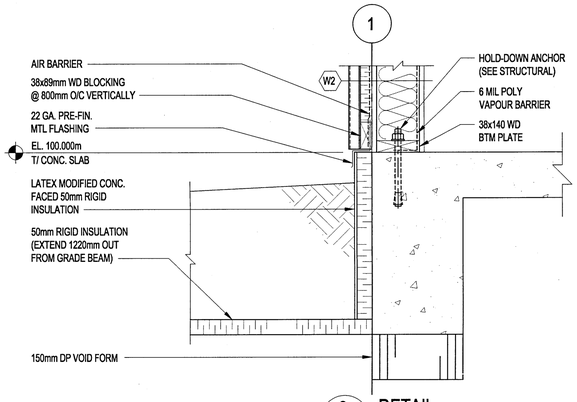

2 / - DETAIL
SCALE: 1:10

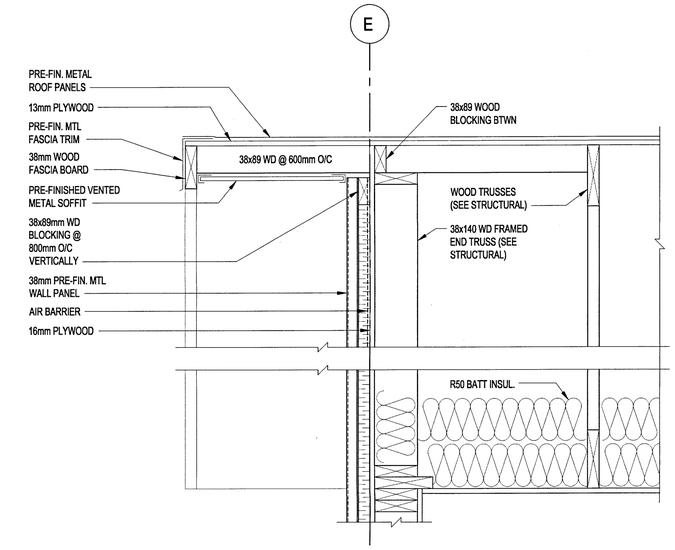

3 / - DETAIL
SCALE: 1:10

LOCATION APPROVED
UNDERGROUND STRUCTURES

SUPV. U/G STRUCTURES COMMITTEE — DATE

NOTE:
LOCATION OF UNDERGROUND STRUCTURES AS SHOWN ARE BASED ON THE BEST INFORMATION AVAILABLE BUT NO GUARANTEE IS GIVEN THAT ALL EXISTING UTILITIES ARE SHOWN OR THAT THE GIVEN LOCATIONS ARE EXACT. CONFIRMATION OF EXISTENCE AND EXACT LOCATION OF ALL SERVICES MUST BE OBTAINED FROM THE INDIVIDUAL UTILITIES BEFORE PROCEEDING WITH CONSTRUCTION.

B.M.
ELEV.

NO.	REVISIONS	DATE	BY
0	ISSUED FOR TENDER	17/03/29	

KGS GROUP
CONSULTING ENGINEERS

DESIGNED BY	DJP	CHECKED BY	CMS
DRAWN BY	MBB	APPROVED BY	
HOR. SCALE:	AS NOTED	RELEASED FOR CONSTRUCTION:	
VERTICAL:	AS NOTED		
DATE	17/01/03	DATE	

ENGINEER'S SEAL
PROVINCE OF MANITOBA
D.J. PETRAK
Member
24082
17-03-29
REGISTERED PROFESSIONAL ENGINEER

CONSULTANT DRAWING NO.
16-0107-010

Winnipeg
THE CITY OF WINNIPEG
WATER AND WASTE DEPARTMENT

PROJECT TITLE
4R WINNIPEG DEPOT
EAST WINNIPEG COMMUNITY RESOURCE RECOVERY CENTRE

HHW BUILDING DETAILS

SHEET 15 OF 41
COMPUTER FILE NAME 16-0107-010
CONSULTANT DRAWING NUMBER B07

16-0107-010\16-0107-010_B03.dwg