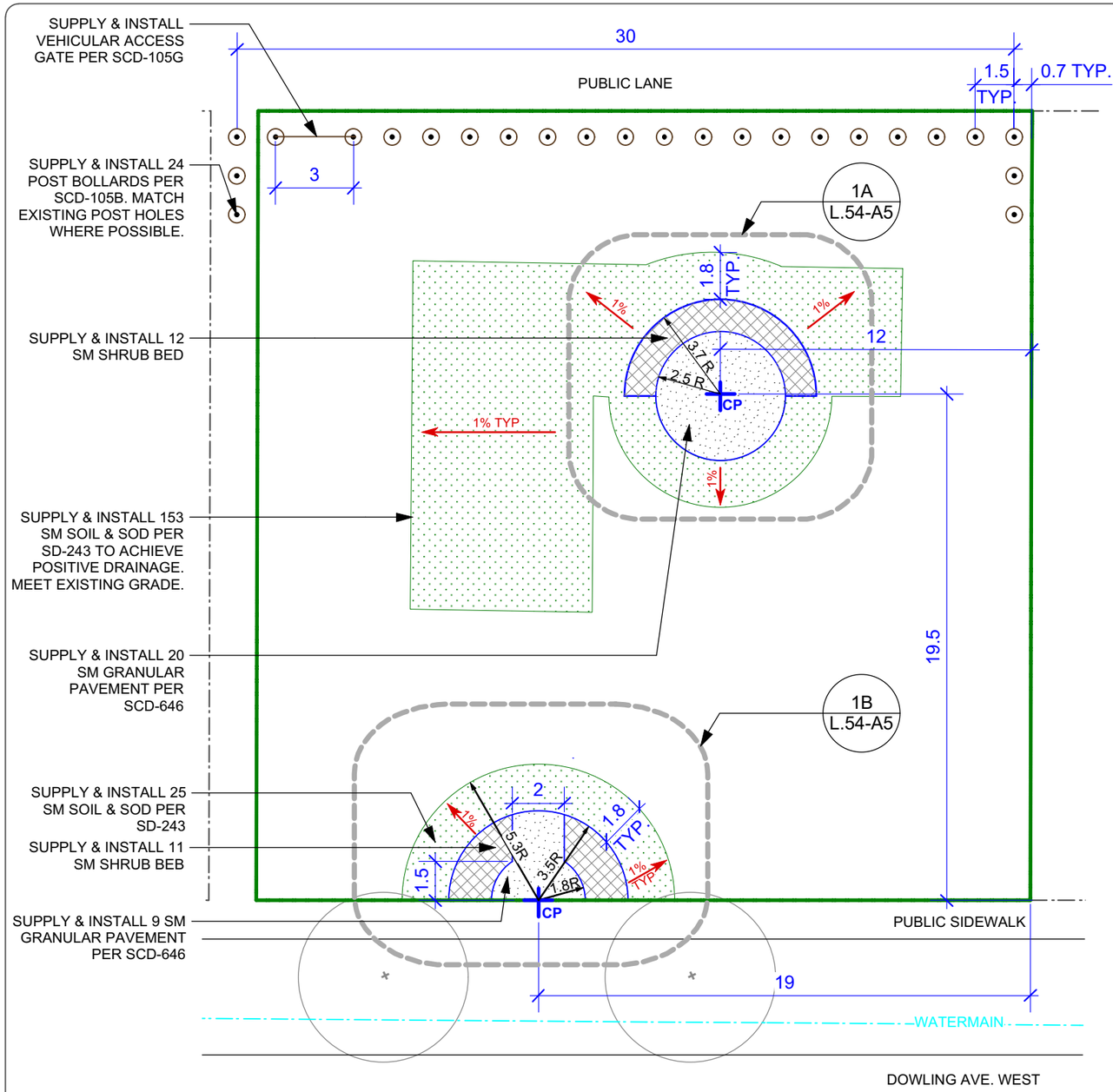

N

1 / L.54-A2 LAYOUT & MATERIALS PLAN
Scale: 1:200

0 5 10 15 m
SCALE

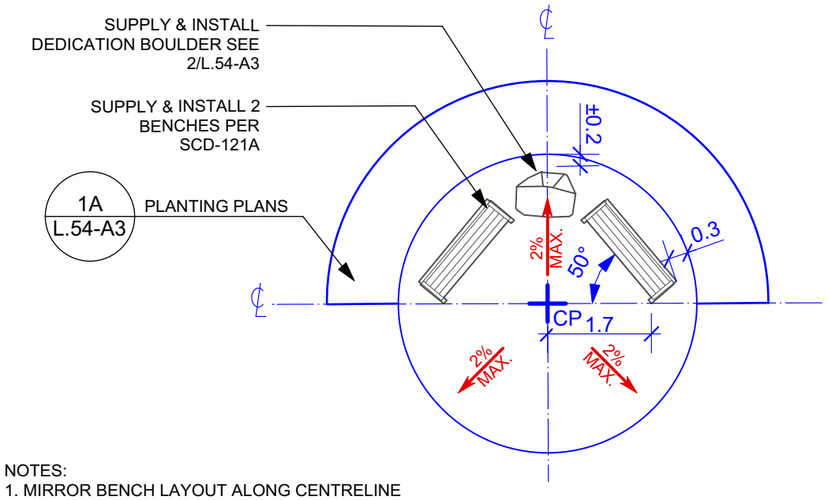

NOTES:
1. MIRROR BENCH LAYOUT ALONG CENTRELINE
2. MAX 2% SLOPE & CROSS SLOPE ON GRANULAR PAVEMENT TYP.

A. BENCH & DEDICATION BOULDER LAYOUT

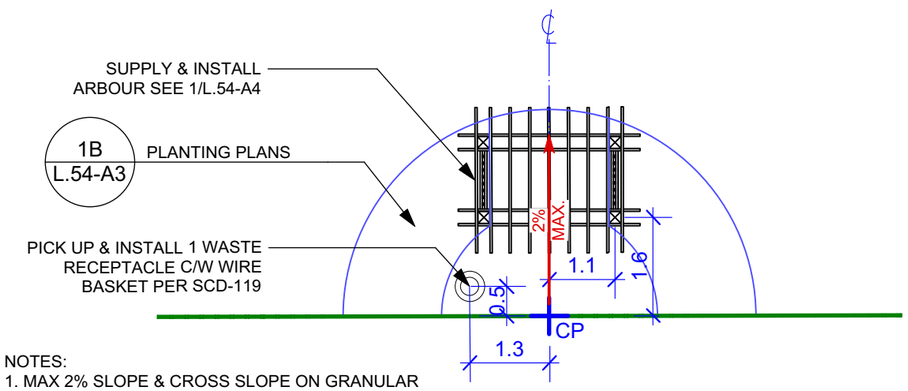

NOTES:
1. MAX 2% SLOPE & CROSS SLOPE ON GRANULAR PAVEMENT TYP.

B. ARBOUR & WASTE RECEPTACLE LAYOUT

2 / L.54-A2 SITE FURNISHINGS LAYOUT
Scale: 1:100

0 8 m
SCALE

LAYOUT NOTES
1. ALL WORK TO CONFORM TO CURRENT CITY OF WINNIPEG STANDARD CONSTRUCTION SPECIFICATIONS AND DETAILS UNLESS OTHERWISE NOTED.
2. DIMENSIONS ARE IN METERS UNLESS OTHERWISE NOTED.

CONTRACTOR TO CONFIRM ALL DIMENSIONS AND REPORT ANY DISCREPANCIES TO CONTRACT ADMINISTRATOR PRIOR TO CONSTRUCTION. LOCATION OF UNDERGROUND STRUCTURES AS SHOWN ARE BASED ON THE BEST INFORMATION AVAILABLE BUT NO GUARANTEE IS GIVEN THAT ALL EXISTING UTILITIES ARE SHOWN OR THAT THE GIVEN LOCATIONS ARE EXACT. CONFIRMATION OF EXISTENCE AND EXACT LOCATION OF ALL SERVICES MUST BE OBTAINED FROM THE INDIVIDUAL UTILITIES BEFORE PROCEEDING WITH CONSTRUCTION.

Winnipeg

THE CITY OF WINNIPEG
Planning, Property and Development Department
Planning and Land Use Division
Unit 15 - 30 Fort Street, Winnipeg, MB, (R3C 4X5)

DESIGNED BY	SP/LL	CHECKED BY	IL
DRAWN BY	SP/LL	APPROVED BY	IL
HORIZ. SCALE / VERT. SCALE	AS NOTED		
DATE	AUGUST 2017		

MANAGER, PARK AND OPEN SPACES — DATE

MANAGER, PLANNING AND LAND USE DIVISION — DATE

DRAWING TITLE
Louise Page Park
Park Redevelopment
Layout & Materials Plan

SITE ADDRESS 121 DOWLING AVE. WEST

DRAWING NO.
L.54-A2

BID OPPORTUNITY NO.
593-2017

06-01-23 Template.mcd Monday, January 23, 2006