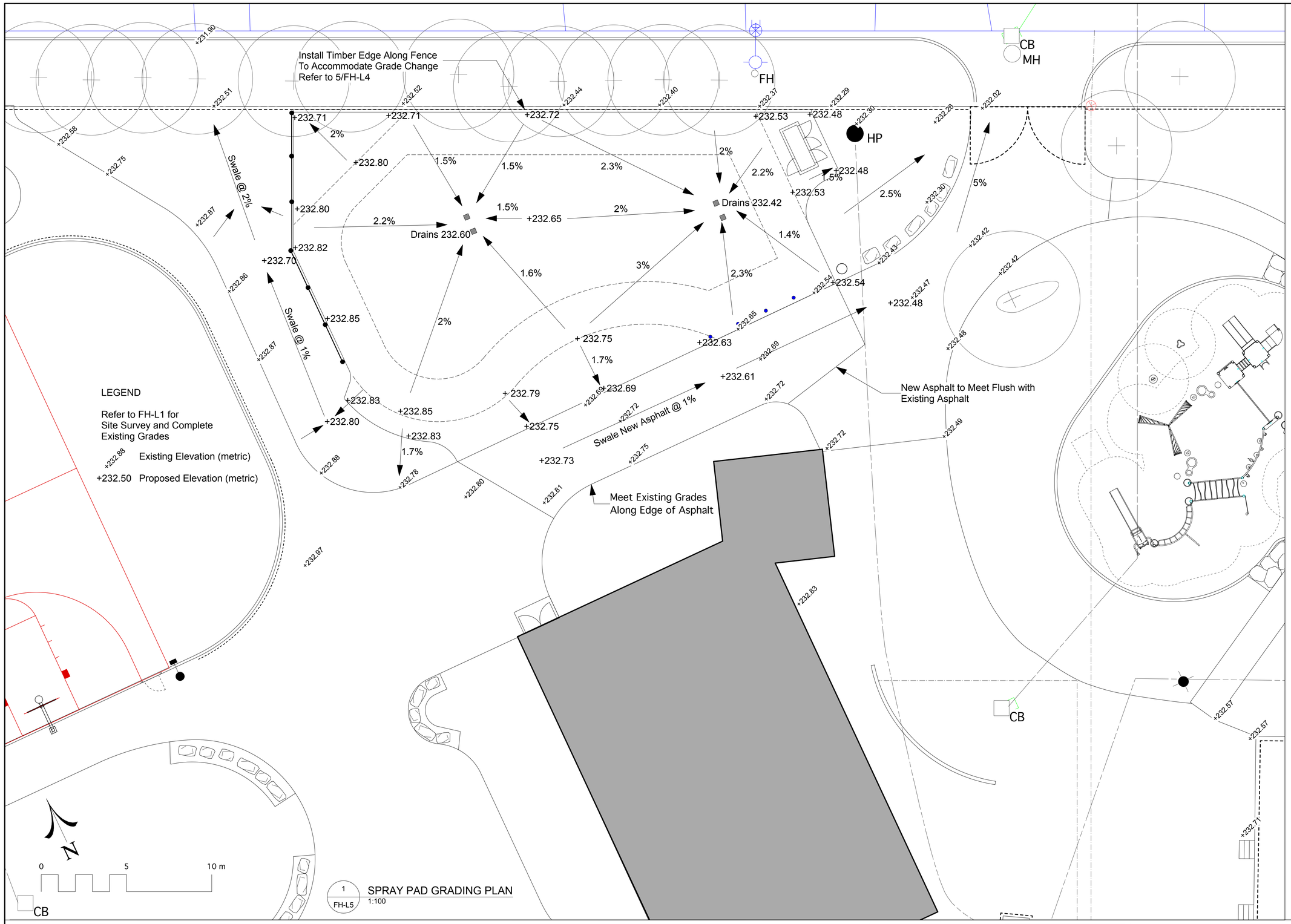

1 / FH-L5 SPRAY PAD GRADING PLAN
1:100

MATERIALS

COMPOSITE SLATS:
- 89mm x 89mm COMPOSITE BOARDS
- CEDAR TONE FINISH

METAL OPTIONS:

- **BLACK POWDERCOATED** - (Metal suitably cleaned to remove any grease, wax etc. for proper paint bonding to occur. Base coat Zinc rich primer. Baked with a final thickness of paint between 5 8 mil - **Product # 52501071**

~~- **GALVANIZED** - Product # 505010710LV~~

Drawing Title: **TACHE BENCH COMPOSITE WITH ARMS surface mount**

Drawing No: **SCD-121E**

Benches to also have centre arm rests.

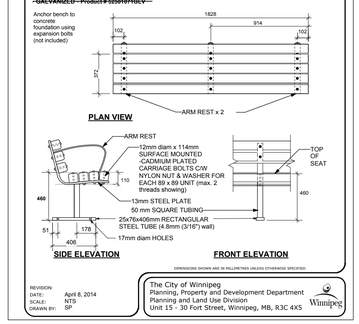

DIMENSIONS SHOWN ARE IN MILLIMETRES UNLESS OTHERWISE SPECIFIED

REVISION:
DATE: April 8, 2014
SCALE: NTS
DRAWN BY: SP

The City of Winnipeg
Planning, Property and Development Department
Planning and Land Use Division
Unit 15 - 30 Fort Street, Winnipeg, MB, R3C 4X5

METAL SLAT WR:
Black Finish - Product # 5225-1063BLK
~~Gray Finish - Product # 5250106SGLV~~

WIRE BASKET:
Black Finish - Product # 52501038
~~Gray Finish - Product # 5250103SGLV~~

Drawing Title: **WASTE RECEPTACLE SIDE OPENING METAL SLAT TYPE**

Drawing No: **SCD-119**

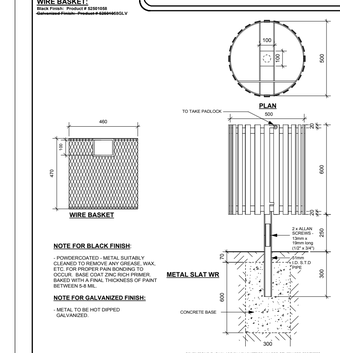

NOTE FOR BLACK FINISH:

- POWDERCOATED - METAL SUITABLY CLEANED TO REMOVE ANY GREASE, WAX, ETC. FOR PROPER PAIN BONDING TO OCCUR. BASE COAT ZINC RICH PRIMER. BAKED WITH A FINAL THICKNESS OF PAINT BETWEEN 5-8 MIL.

NOTE FOR GALVANIZED FINISH:

- METAL TO BE HOT DIPPED GALVANIZED.

DIMENSIONS SHOWN ARE IN MILLIMETRES UNLESS OTHERWISE SPECIFIED

REVISION: 2
DATE: December 20, 2012
SCALE: N.T.S.
DRAWN BY: SP

The City of Winnipeg
Planning, Property and Development Department
Planning and Land Use Division
Unit 15 - 30 Fort Street, Winnipeg, MB, R3C 4X5

MATERIALS

WOOD SLATS:
- 38mm x 89mm CLEAR SITCA SPRUCE OR CLEAR CEDAR
- FINISH - SIKKENS CETOL No. 078 NATURAL or PAINTED FINISH: GREEN, WALNUT, CEDAR OR GREY (AS SPECIFIED)

METAL LEG OPTIONS:
- **BLACK POWDERCOATED** - (Metal suitably cleaned to remove any grease, wax etc. for proper paint bonding to occur. Base coat Zinc rich primer. Baked with a final thickness of paint between 5 - 8 mil
or
~~**GALVANIZED**~~

Drawing Title: **TACHE STYLE WHEELCHAIR METAL FRAME PICNIC TABLE**

Drawing No: **SCD-122A**

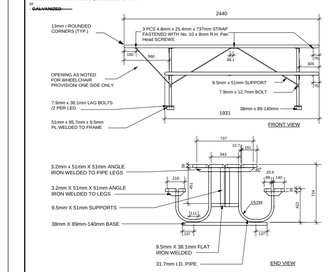

NOTE:
ALL TABLE TOP AND SEAT BOARDS TO BE FASTENED TO ANGLE IRONS WITH 8mm CARRIAGE BOLTS SECURED WITH WASHER AND NUT.

DIMENSIONS SHOWN ARE IN MILLIMETRES UNLESS OTHERWISE SPECIFIED

REVISION: 1
DATE: January 12, 2012
SCALE: N.T.S.
DRAWN BY: SP

The City of Winnipeg
Planning, Property and Development Department
Parks, Waterways & Community Initiatives Division
Unit 15 - 30 Fort Street, Winnipeg, MB, R3C 4X5

Location of underground structures as shown are based on the best information available but no guarantee is given that all existing utilities are shown or that the given locations are exact. Confirmation of existence and exact location of all services must be obtained from the individual utilities before proceeding with construction.

DO NOT SCALE DRAWING - PLOT MAY NOT BE AT 100%

DAVID WAGNER ASSOCIATES INC.
#4-430 RIVER AVENUE • WINNIPEG MB • R3L 0C6 • (204) 452-2426

NO.	REVISION / NOTE	DATE	BY
9			
8			
7			
6			
5			
4			
3			
2			
1			

PROJECT
FREIGHT HOUSE SPRAY PAD
AND WADING POOL PROJECTS
FREIGHT HOUSE
200 ISABEL STREET
WINNIPEG, MANITOBA

SCALE: AS SHOWN
DATE: AUGUST 4, 2017
DRAWN BY: LLW
CHECKED BY: DW
PROJECT NO. 1707

DRAWING TITLE
GRADING PLAN
AND DETAILS

SHEET NO. FH-L5