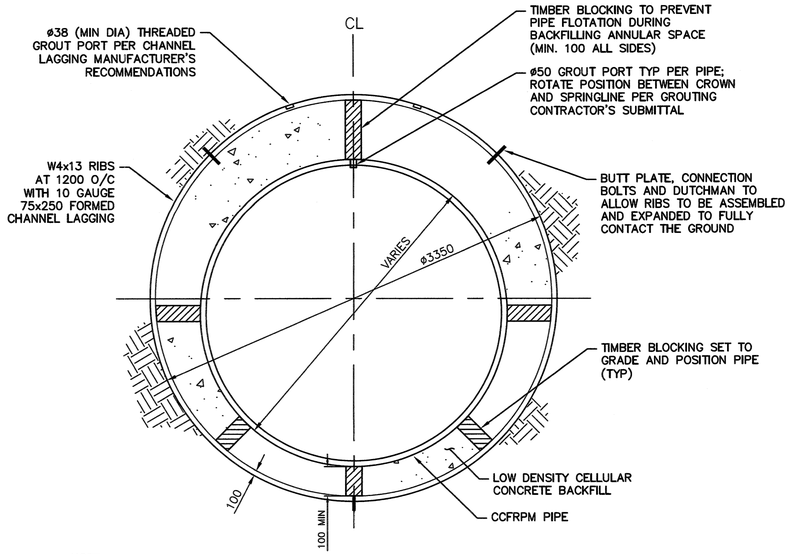

NOTE
1. ADJUST BLOCKING HEIGHTS TO MAINTAIN CARRIER PIPE SLOPE AND INVERTS AS INDICATED ON THE DRAWINGS.

1 TUNNEL DETAIL
NTS

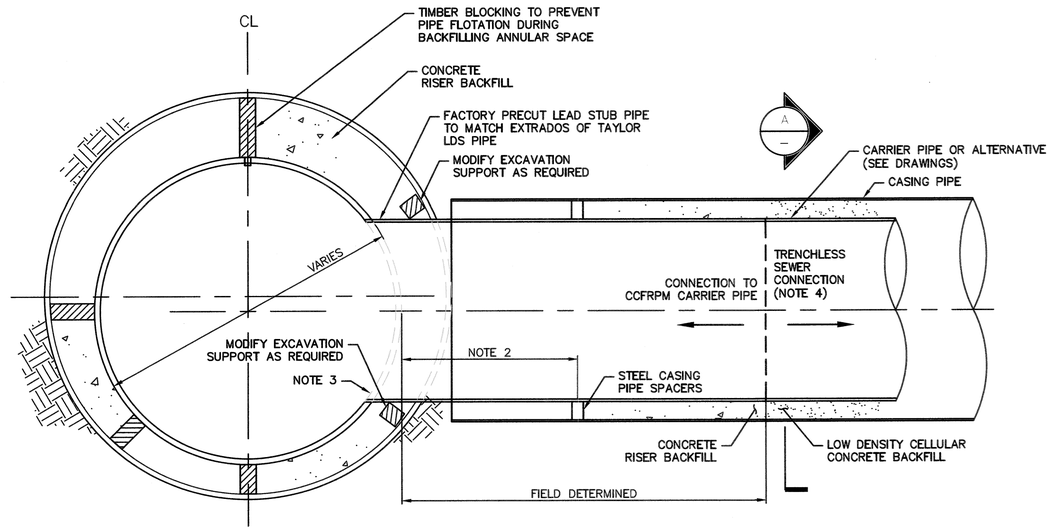

NOTES
1. ONLY ONE STUB SHOWN FOR CLARITY.
2. STEEL CASING PIPE SPACERS PER PIPE MANUFACTURER'S RECOMMENDATIONS
3. LAMINATE STUB CONNECTION PER CCFRPM PIPE MANUFACTURER'S RECOMMENDATIONS.
4. STUB OUT TO CONTINUE AS HOBAS INSIDE STEEL CASING OR TRANSITION TO ALTERNATE MATERIAL AND METHOD.
5. METHODS ALTERNATIVE TO AUGER BORING ARE SUBJECT TO ACCEPTANCE IN ACCORDANCE WITH B7 OF THE SPECIFICATION.

2 STUB TUNNEL CONNECTION DETAIL
NTS

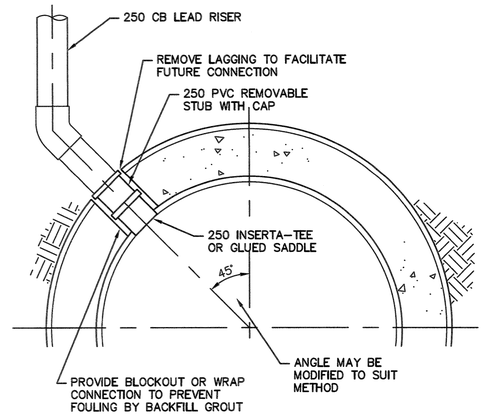

3 CONNECTION DETAIL FOR CATCHBASIN LEAD TO CCFRPM PIPE
NTS

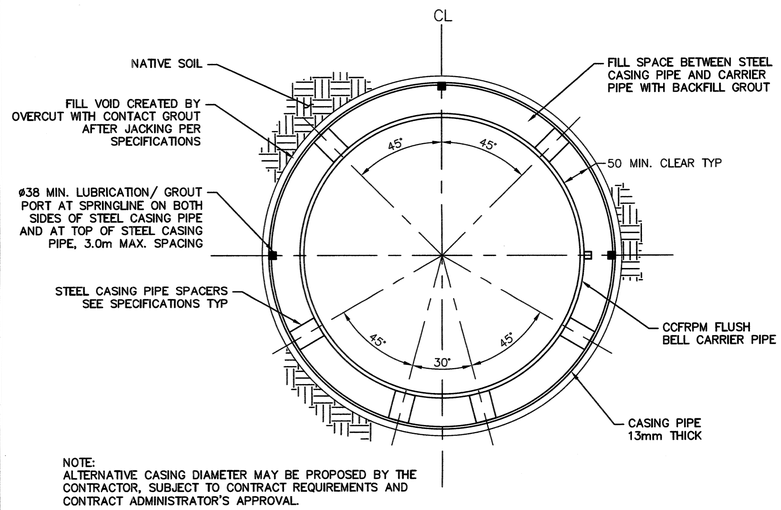

NOTE:
ALTERNATIVE CASING DIAMETER MAY BE PROPOSED BY THE CONTRACTOR, SUBJECT TO CONTRACT REQUIREMENTS AND CONTRACT ADMINISTRATOR'S APPROVAL.

A CCFRPM TUNNEL, FLUSH BELL PIPE (WITH CASING PIPE)
NTS

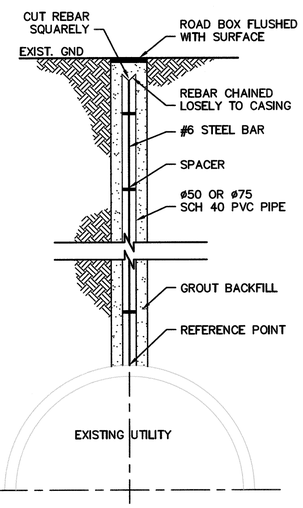

UTILITY SETTLEMENT MONITORING POINT

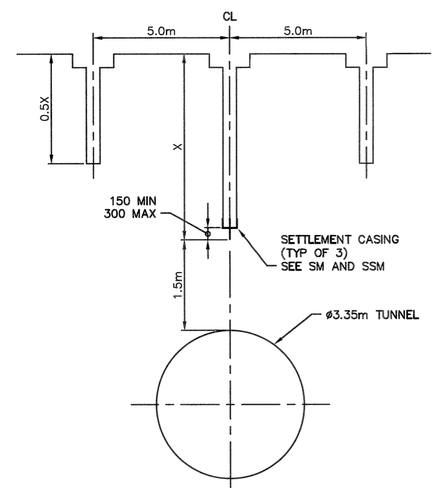

SURFACE AND SUBSURFACE MONITORING ARRAY

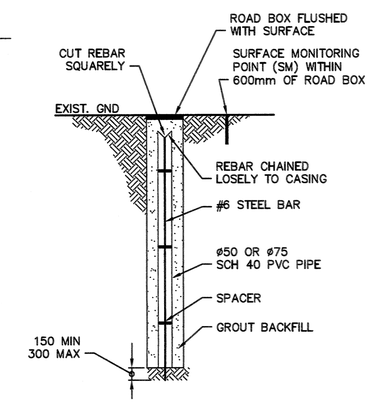

SURFACE AND SUBSURFACE MONITORING POINTS (SM AND SSM)

NOTE: REFER TO SPECIFICATIONS AND DRAWINGS FOR EXACT INSTALLATION LOCATION.

4 MONITORING POINT DETAILS
NTS

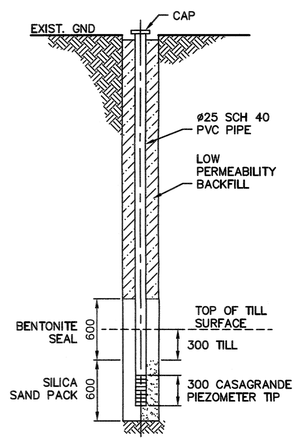

NOTES:
1. INSTALL A PROTECTIVE COVER, EITHER FLUSH MOUNT OR ABOVE GRADE.
2. SATURATE SAND PACK PRIOR TO INSTALLING BENTONITE SEAL.

5 STANDPIPE INSTALLATION DETAIL
NTS

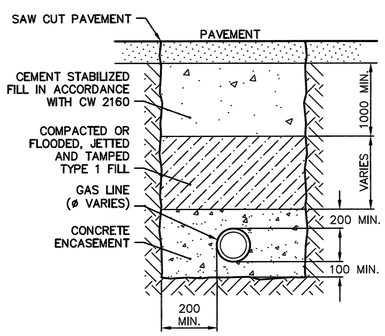

NOTES
1. SHOULD THE TUNNELLING OR TRENCHLESS SEWER CONSTRUCTION ACTIVITIES BE FOUND TO IMPACT GAS LINES OR SERVICES, THE CONTRACT ADMINISTRATOR MAY DIRECT THE CONTRACTOR TO ENCASE THE LINE AS SHOWN.
2. COORDINATE WORK WITH MANITOBA HYDRO.
3. EXCAVATE USING HYDRO VAC METHODS.
4. EXPOSE AND SUPPORT PIPE IN ACCORDANCE WITH MANITOBA HYDRO REQUIREMENTS.
5. PROTECT FROM FLOTATION.
6. LENGTH OF ENCASEMENT TO BE 10m.
7. PAYMENT FOR WORK WILL BE PAID OUT UNDER THE PROVISIONAL ITEM FOR "GAS LINE ENCASEMENT" AND WILL INCLUDE ALL WORK ITEMS SHOWN/ DESCRIBED ON THE DRAWING AND ANY OTHER INCIDENTAL ITEMS REQUIRED TO UNDERTAKE THE WORK.

6 PROVISION FOR GAS LINE ENCASEMENT
NTS

APEGM
Certificate of Authorization
CH2M HILL Canada Ltd.
No. 1441

NO.	REVISIONS	DATE	BY
0	ISSUED FOR TENDER	01/2018	JBC

B.M. ELEV.

KGS GROUP CONSULTING ENGINEERS

ch2m

DESIGNED BY	AF	CHECKED BY	MD
DRAWN BY	JBC	APPROVED BY	(Rpc)
HOR. SCALE:	AS NOTED	RELEASED FOR CONSTRUCTION	
VERTICAL:	–	DATE	

ENGINEER'S SEAL: PROVINCE OF MANITOBA, DRAPER, 11/01/2018, 37958, REGISTERED PROFESSIONAL ENGINEER

CONSULTANT DRAWING NO. C-504

Winnipeg

THE CITY OF WINNIPEG
WATER AND WASTE DEPARTMENT

PROJECT TITLE: COCKBURN AND CALROSSIE COMBINED SEWER RELIEF WORKS – CONTRACT 5
TUNNELLING DETAILS

SHEET OF 20 OF 25
COMPUTER FILE NAME: C-504.dwg
CITY DRAWING NUMBER: LD-8431

FileName C:\pw_workdir\ch2mhill_wbg\cortez1\d0436657\